AGENDA (*Corrected*)
Planning & Zoning Commission

Wednesday, September 9, 2026 @ 6:30 PM

Anna Municipal Complex - Council Chambers
120 W. 7th Street, Anna, Texas 75409

The Planning & Zoning Commission of the City of Anna will meet on Wednesday, September 9, 2026 at 6:30 PM, in the Anna Municipal Complex – Council Chambers, located at 120 W. 7th Street, to consider the following items.

If you wish to speak on an Open Session Agenda Item, please fill out the Speaker Registration Form and turn it in to city staff before the meeting starts.

1. **Call to Order, Roll Call, and Establishment of Quorum.**

2. **Invocation and Pledge of Allegiance.**
American Pledge*: I pledge allegiance to the flag of the United States of America, and to the Republic for which it stands, one nation under God, indivisible, with liberty and justice for all.*

Texas Pledge*: Honor the Texas flag; I pledge allegiance to thee, Texas, one state under God, one and indivisible.*

3. **Neighbor Comments:** At this time, any person may address the Planning & Zoning Commission regarding an item on this meeting Agenda that is not scheduled for public hearing. Also, at this time, any person may address the Commission regarding an item that is not on this meeting Agenda. Each person will be allowed up to three (3) minutes to speak. No discussion or action may be taken at this meeting on items not listed on this Agenda, other than to make statements of specific factual information in response to a neighbor's inquiry or to recite existing policy in response to the inquiry.

4. **Director's Report.**

    a. **Monthly Report**

5. **Consent Items.**

    a. Approve minutes of the July 6, 2026 Planning & Zoning Commission Meeting.

    b. Approve minutes of the August 3, 2026 Planning & Zoning Commission Meeting.

c. Approve Anna 455 Addition, Block A, Lot 5R, Site Plan (SP 26-0016)

d. Approve Rosamond Crossing Northeast Corner, Block A, Lot 10, Site Plan (SP 26-0017)

e. Approve Lopez Addition of Anna, Block A, Lots 1 and 2, Final Plat (FP 26-0012)

f. Approve Sherley Farms, Phase 1B, Amenity Center, Block X, Lot 1, Site Plan (SP 26-0018)

g. Approve Finley Park, Block A, Lot 1, Site Plan (SP 26-0011)

h. Approve Sherley Avenue Addition, Block A, Lot 1, Site Plan (SP 26-0019)

6. **Items For Individual Consideration and Public Hearings.**

At the time and place of any public hearing held during this meeting, all persons who desire will have an opportunity to be heard in opposition to or in favor of the ordinance, application, or other proposed item.

a. Continue a Public Hearing on a recommendation regarding an Ordinance amending the Sherley Farms Planned Development Zoning (Ord. No. 1137-2025-02)

b. Conduct a Public Hearing/Consider/Discuss/Action on request to zone 808.1± acres on the southeast corner of County Road 285 and County Road 827 in accordance with the Oak Ridge Development Agreement (Resolution No. 2025-05-1782)

c. Approve Oak Ridge, Phases 1 and 2, Preliminary Plat (PP 26-0005)

d. Continue a Public Hearing/Consider/Discuss/Action on a recommendation regarding an Ordinance related to amendments to the Anna 2050 Comprehensive Plan.

e. Conduct a Public Hearing on a recommendation regarding an Ordinance adopting a Historic Preservation Ordinance.

f. Conduct a Public Hearing/Consider/Discuss/Action on Amendments to Article 9.04 (Zoning Ordinance) of the City of Anna Code of Ordinances.

g. Conduct a Public Hearing/Consider/Discuss/Action on Amendments to Article 9.02 (Subdivision Regulations) of the City of Anna Code of Ordinances.

h. Consider/Discuss/Action on Amendments to Article 9.03 (Design Standards) of the City of Anna Code of Ordinances.

7. **Future Agenda Items:** At this time, the Planning & Zoning Commission may identify issues or topics that they wish to schedule for discussion at a future meeting.

8. **Adjourn.**

This is to certify that I, Lauren Mecke, Senior Planner, posted this Agenda on the City's website (www.annatexas.gov) and at the Anna Municipal Complex bulletin board at or before 5:00 p.m. on 09/04/2026.

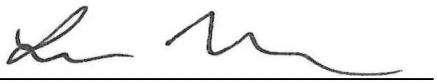

Lauren Mecke, Senior Planner

In accordance with the Americans with Disabilities Act, it is the policy of the City of Anna to offer its public programs, services, and meetings in a manner that is readily accessible to everyone, including individuals with disabilities. If you are a person with a disability and require information or materials in an appropriate alternative format; or if you require any other accommodation, please contact the ADA Coordinator at least 48 hours in advance of the event. Email adacompliance@annatexas.gov. Advance notification within this guideline will enable the City to make reasonable arrangements to ensure accessibility. ADA grievances may also be directed to the ADA Coordinator or filed online at https://annatexas.gov/ada

Item No. 4.

Planning & Zoning Commission Agenda
Staff Report

Meeting Date: 9/9/2026
Staff Contact:

AGENDA ITEM:
Director's Report.

SUMMARY:

BACKGROUND:

Date Submitted		**Jurisdiction**	
Owner			
Representative/Applicant			
Requested Action			
Purpose			
Land Area			
Location			
Comp Plan Designation			
Existing Zoning			
Public Notice			
Surrounding Properties			
	Land Use	**Zoning**	**Comp Plan Designation**
North			
East			
South			
West			

ATTACHMENTS:

P&Z	City Council	Application Type	Project Status	Project Type	Project Name
8/3/2026	N/A	Replat	Staff Approved	Combine two lots into one	Urban Crossing, Block B, Lot 8R-1
8/3/2026	N/A	Preliminary Site Plan	On Agenda	Medical Office Building	One Anna Two Addition, Block A, Lot 4
8/3/2026	N/A	Minor Plat	Staff Approved	Adjust lot line	Hurricane Creek Estates, Block A, Lots 22R & 23R
8/3/2026	N/A	Revised Concept Plan	On Agenda	Eleven Flex Office Buildings	Trinity Creek Flex Space
8/3/2026	N/A	Preliminary Site Plan	On Agenda	Three retail/restaurant buildings	Shops at Standridge Retail, Block A, Lots 7A, B, C, & X
8/3/2026	N/A	Final Plat	On Agenda	Ten apartment buildings	Anna Retail Addition, Block A, Lot 8R
8/3/2026	N/A	Site Plan	Staff Approved	Retail building and daycare	The Village at Waters Creek Retail, Block A, Lot 1
8/3/2026	N/A	Site Plan	Staff Approved	Auto repair - light	Stanridge Retail, Block A, Lot 4 (Brake Masters)
8/3/2026	N/A	Minor Plat	Staff Approved	Combine 3 lots into one, ETJ	M. Hanson Addition, Block A, Lot 1
8/3/2026	N/A	Replat	Staff Approved	Divide one lot into three	One Anna Two Addition, Block A, Lots 5R, 7, & 8
8/3/2026	8/25/2026	Text Amendment	On agenda	Text Amendment	Sherley Farms
			On Agenda Projects		
P&Z	**City Council**	**Application Type**	**Project Status**	**Project Type**	**Project Name**
9/9/2026	N/A	Replat	Staff Approved	Split one lot into two	Anna 455 Addition, Block A, Lots 5R and 7
9/9/2026	N/A	Site Plan	On Agenda	Restaurant	Anna 455 Addition, Block A, Lot 5R (7Brew)
9/9/2026	N/A	Site Plan	On Agenda	Restaurant	Rosamond Crossing NEC, Block A, Lot 10 (Freddy's)
9/9/2026	N/A	Final Plat	On Agenda	2-Single family homes	Lopez Addition of Anna, Block A, Lots 1 and 2
9/9/2026	N/A	Site Plan	On Agenda	Amenity center	Sherley Farms, Phase 1B, Amenity Center, Block X, Lot 1
9/9/2026	N/A	Planned Development	On Agenda	Request to zone	Oak Ridge Zoning
9/8/2026	N/A	Preliminary Plat	On Agenda	Single-family residential	Oak Ridge Phases 1 and 1
9/9/2026	N/A	Site Plan	On Agenda	One Park	Finley Park, Block A, Lot 1

MINUTES
Planning & Zoning Commission

Monday, July 6, 2026 @ 6:30 PM

Anna Municipal Complex - Council Chambers
120 W. 7th Street, Anna, Texas 75409

The Planning and Zoning Commission of the City of Anna held a meeting at 6:30 PM on July 6, 2026, at the Municipal Complex located at 120 W. 7th Street, to consider the following items.

1. **Call to Order, Roll Call, and Establishment of Quorum.**
   The meeting was called to order at 6:30 PM.
   Commissioners present: Tom Longmire, Randy Wise, Scott Gentry, and Gretchen Stewart, Staci Westmoreland, and Aquita DeJarnette
   Commissioners absent: Doug Hermann
   Staff present: Kaleb Kentner, Lauren Mecke, Everett Johnson, Nancy Reynolds, and Nyssa Galatas

2. **Invocation and Pledge of Allegiance.**
   Invocation given by Commissioner Westmoreland.

3. **Neighbor Comments:**
   There were no Neighbor Comments.

4. **Director's Report.**
   Mr. Kentner shared the monthly report on recent and upcoming projects and introduced Nyssa Galatas, Planner I.

5. **Consent Items.**

   a. Approve minutes of the June 6, 2026 Planning & Zoning Commission Meeting.

   b. Approve Anna Elementary No. 3, Block 1, Lot 1, Replat (RP 26-0006)

   c. Approve Leonard Commercial, Block A, Lot 1, Preliminary Site Plan (PSP 26-0009)

   d. Approve Shadowbend Commercial, Block A, Lot 7, Replat (RP 26-0007)

   e. Approve Liberty Hills, Phase 3, Final Plat (FP 26-0009)

   f. Approve Liberty Hills, Phase 4, Final Plat (FP 26-0010)

   g. Approve Leonard Avenue Minor Plat (MP 26-0002)

   Commissioner Stewart made a motion to approve Consent Items.
   Commissioner Westmoreland seconded the motion.
   Motion passed unanimously.

6. **Items For Individual Consideration and Public Hearings.**

At the time and place of any public hearing held during this meeting, all persons who desire will have an opportunity to be heard in opposition to or in favor of the ordinance, application, or other proposed item.

a. Conduct a Public Hearing/Consider/Discuss/Action on Amendments to Chapter 9 (Planning & Development Regulations) of the City of Anna Code of Ordinances.

Public Hearing was opened at 6:34 PM.

Mr. Kentner and Ms. Mecke gave a summary of the amendments.

Discussion ensued by Commissioner Longmire about the process for approval for amendments. Mr. Kentner explained the commission can either give staff the direction to proceed with reviewing and bring back a completed Code of Ordinances or direct staff to proceed with legal counsel and engineering.

Mr. Culbertson spoke about public input and checks and balances.

Public Hearing was closed at 7:19 PM.

Commissioner Longmire made a motion to approve moving ahead with revisions and changes.
Commissioner Gentry seconded the motion.
Motion passed unanimously.

7. **Future Agenda Items:** At this time, the Planning & Zoning Commission may identify issues or topics that they wish to schedule for discussion at a future meeting.

8. **Adjourn.**
Commissioner Stewart made a motion to adjourn.
Commissioner DeJarnette seconded the motion.
Motion passed unanimously at 7:30 PM.

_____
Chairman Tom Longmire

ATTEST:

_____
Lauren Mecke, Sr. Planner

MINUTES
Planning & Zoning Commission

Monday, August 3, 2026 @ 6:30 PM

Anna Municipal Complex - Council Chambers
120 W. 7th Street, Anna, Texas 75409

The Planning and Zoning Commission of the City of Anna held a meeting at 6:30 PM on August 3, 2026, at the Municipal Complex located at 120 W. 7th Street, to consider the following items.

1. **Call to Order, Roll Call, and Establishment of Quorum.**
   The meeting was called to order at 6:33 PM.
   Commissioners present: Tom Longmire, Randy Wise, Scott Gentry, Doug Herman, Staci Westmoreland, and Aquita DeJarnette
   Commissioners absent: Gretchen Stewart
   Staff present: Kaleb Kentner, Lauren Mecke, Everett Johnson, Nancy Reynolds, Ashley Saucedo and Nyssa Galatas

2. **Invocation and Pledge of Allegiance.**
   Invocation was given by Commissioner Westmoreland.

3. **Neighbor Comments:**
   Betty Sharp spoke about 5c and gave input on upcoming policy changes she would like to see made.

4. **Director's Report.**
   Mr. Kentner shared the monthly report on recent and upcoming projects and introduced Ashley Saucedo, Planner I.

5. **Consent Items.**

   a. Approve minutes of the July 6, 2026 Planning & Zoning Commission Meeting.

   b. Approve One Anna Two Addition, Block A, Lot 7, Preliminary Site Plan (PSP 26-0010)

   c. Approve Trinity Creek Flex Revised Concept Plan (CP 26-0002)

   d. Approve Shops at Standridge Retail, Block A, Lots 7A, 7B, 7C, & 7X, Preliminary Site Plan (PSP 26-0011)

   e. Approve Anna Retail Addition, Block A, Lot 8R, Final Plat (FP 26-0011)
      Commissioner Longmire pulled item A for corrections.
      Commissioner Westmoreland made a motion to approve Consent Items B-E.
      Commissioner Gentry seconded the motion.
      Motion passed unanimously.

6. **Items For Individual Consideration and Public Hearings.**

At the time and place of any public hearing held during this meeting, all persons who desire will have an opportunity to be heard in opposition to or in favor of the ordinance, application, or other proposed item.

a. Conduct a Public Hearing/Consider/Discuss/Action on a recommendation regarding an Ordinance amending the Sherley Farms Planned Development.

Public Hearing was opened at 6:43 PM.

Ms. Mecke gave a summary of the recommended amendments for the Sherley Farms Planned Development.

Discussion ensued by Commissioner Gentry about the amenity center and the cementitious fiberboard. Ms. Mecke and Mr. Kentner explained in more detail of why the developers would like to use the cementitious fiberboard and how it will be tracked per the Development Agreement by city staff.

Mr. Larry Bennit spoke about the original overall elevations and standards of subdivisions.

Public Hearing was closed at 7:06 PM..

Commissioner Herman made a motion to table 6a until the meeting on 09/09/2026.
Commissioner DeJarnette seconded the motion.
Motion passed unanimously.

b. Conduct a Public Hearing/Consider/Discuss/Action on a recommendation regarding an Ordinance related to amendments to the Anna 2050 Comprehensive Plan.

Public Hearing was opened at 6:43 PM.

Ms. Mecke gave a summary of the recommended amendments to the Anna 2050 Comprehensive Plan.

Discussion ensued by Commissioner Gentry about the land uses and multifamily in the downtown plan. Mr. Kentner explained the recommendations for the Comprehensive Plan.

Commissioner Longmire made a motion to table 6b until the meeting on 09/09/2026 to allow staff to review amendments and provide additional feedback.
Commissioner Westmoreland seconded the motion.
Motion passed unanimously.

7. **Future Agenda Items:** At this time, the Planning & Zoning Commission may identify issues or topics that they wish to schedule for discussion at a future meeting.

8. **Adjourn.**

_____
Chairman Tom Longmire

ATTEST:

_____
Lauren Mecke, Sr. Planner

Item No. 5.c.

Planning & Zoning Commission Agenda
Staff Report

Meeting Date: 9/9/2026
Staff Contact: Everett Johnson

AGENDA ITEM:
Approve Anna 455 Addition, Block A, Lot 5R, Site Plan (SP 26-0016)

SUMMARY:
A restaurant on 0.8± acre located on the north side of W. White Street, 850± feet west of S. Ferguson Parkway.

Recommended for approval as submitted.

BACKGROUND:

Date Submitted	8/5/2026	**Jurisdiction**	City of Anna
Owner	Anchor Point Management Group		
Representative/Applicant	GBC Design		
Requested Action	Approval of the Site Plan		
Purpose	To build a drive-through coffee restaurant		
Land Area	0.8± acre		
Location	The north side of W. White Street, 850± feet west of S. Ferguson Parkway		
Comp Plan Designation	Community Commercial		
Existing Zoning	Planned Development/Regional Commercial (PD/C-2) (Ord. No. 709-2015)		

Surrounding Properties

	Land Use	**Zoning**	**Comp Plan Designation**
North	Single-Family Residential	Single-Family Residential 7.2 (SF-7.2)	Suburban Living
East	Vacant Commercial	Planned Development/Regional Commercial (PD/C-2)	Community Commercial
South	Single-Family Residential	Single-Family Residential 7.2 (SF-7.2)	Suburban Living
West	Auto Parts Store	Planned Development/Regional Commercial (PD/C-2)	Community Commercial

ATTACHMENTS:

1. Locator Map - Anna 455 Addition, Block A, Lot 5R, Site Plan (SP 26-0016)
2. Exhibit A - Anna 455 Addition, Block A, Lot 5R, Site Plan (SP 26-0016)

Anna 455 Addition, Block A, Lot 5R, Site Plan (SP 26-0016)

W WHITE ST

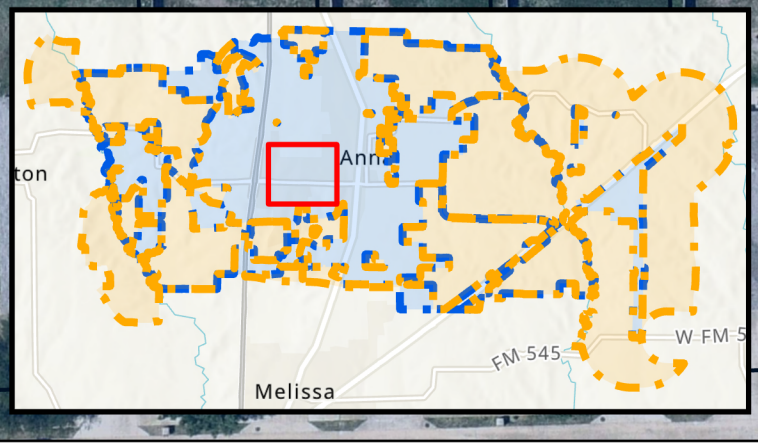

THE CITY OF Anna

N

Subject Property

ETJ

Parcels

City Limits

0 15 30 60 90 120

Feet

September 2026

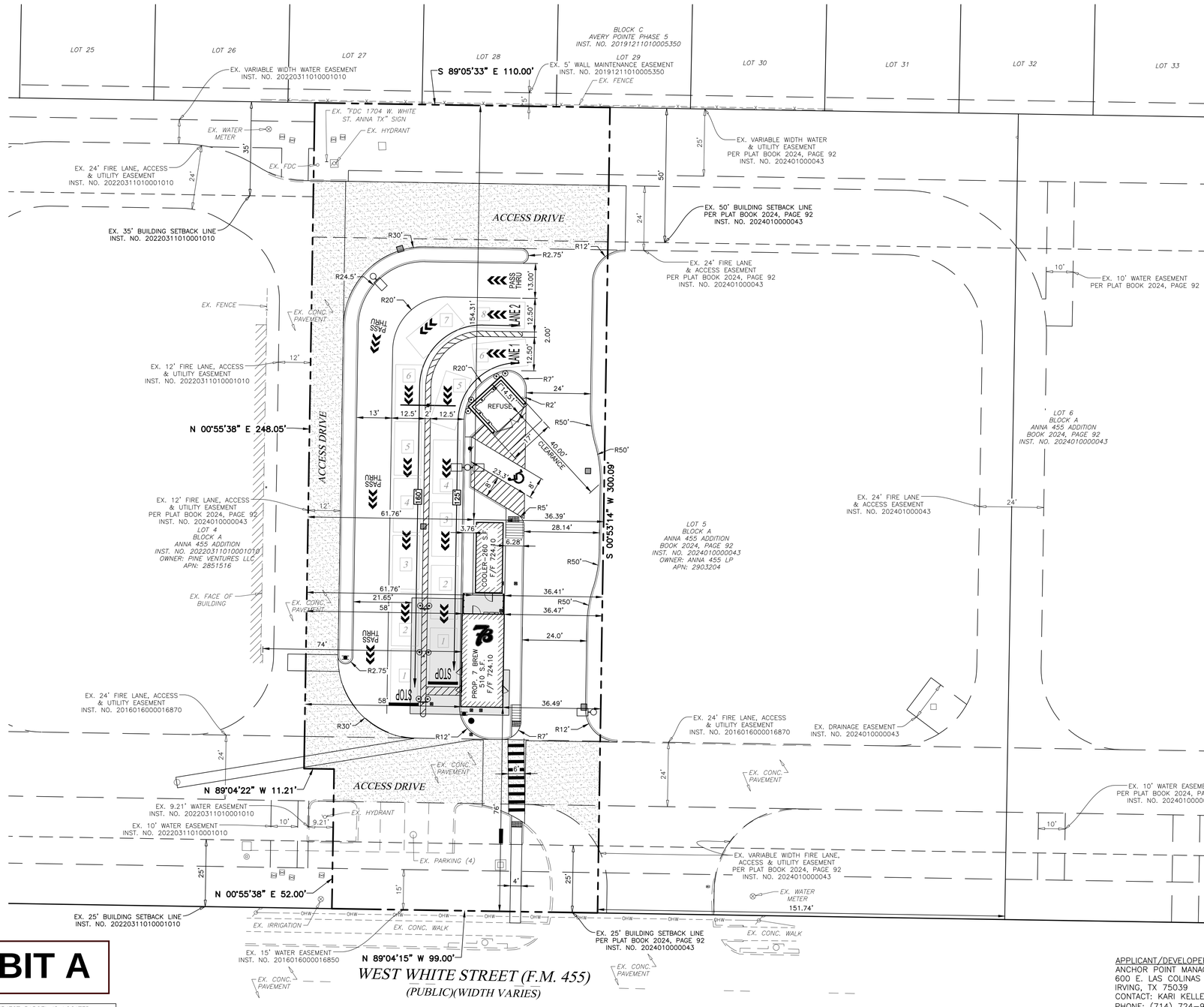



LOCATION MAP
NOT TO SCALE
LATITUDE N 33°20'43.6" (33.3454)
LONGITUDE W 96°34'13.9" (–96.5705)

N

SCALE: 1" = 20'

LEGEND

- PROP. FIRE HYDRANT
- EX. FIRE HYDRANT
- PROP. VALVE
- EX. VALVE
- PROP. MANHOLE
- EX. MANHOLE
- PROP. INLET
- EX. BOX INLET
- EX. LIGHT POLE
- PROP. LIGHT POLE
- PROP. ACCESSIBLE RAMP – RAMP IS NOT TO BE SCORED OR GROOVED
- EX. CURB
- PROP. CURB
- FIRE LANE AREAS ON SUBJECT PROPERTY

EXISTING AREA TABULATION

IMPERVIOUS AREA	
BUILDINGS	= 0 S.F.
ASPHALT PAVEMENT	= 0 S.F.
CONCRETE PAVEMENT	= 7,017 S.F.
SUBTOTAL	= 7,017 S.F. (21.62%)
PERVIOUS AREA	
LANDSCAPE/PLANTING	= 25,439 S.F. (78.38%)
TOTAL AREA	= 32,456 S.F. (0.7451 AC.)

NEW DEVELOPMENT AREA TABULATION

IMPERVIOUS AREA	
BUILDING	= 510 S.F.
REMOTE COOLER	= 260 S.F.
ASPHALT PAVEMENT	= 0 S.F.
CONCRETE PAVEMENT	= 24,657 S.F.
SUBTOTAL	= 25,427 S.F. (78.34%)
PERVIOUS AREA	
LANDSCAPE/PLANTING	= 7,029 S.F. (21.66%)
TOTAL AREA	= 32,456 S.F. (0.7451 AC.)

PARCEL ID: PART OF LOT 5 (APN 2903204)

TOTAL PARCEL SIZE: 0.7451 AC.

BUILDING DIMENSIONS (SEE SITE LAYOUT PLAN)
SQUARE FOOTAGE AREA (GROSS)
7 BREW: 510 S.F.
7 BREW COOLER: 260 S.F.
BUILDING HEIGHT: 1 STORY (19'–8")
BUILDING USE: DRIVE–THRU COFFEE STAND

PARKING SUMMARY: PROPOSED CONDITIONS

EXISTING PARKING SPACES:	
REGULAR SPACES	= 4
ACCESSIBLE SPACES	= 0
TOTAL	= 4
PARKING SPACES PROVIDED:	
REGULAR SPACES	= 4
ACCESSIBLE SPACES	= 1
TOTAL	= 5

EXHIBIT A

FLOOD ZONE DESIGNATION: SUBJECT PARCEL IS LOCATED WITHIN ZONE "X" (AREA OF MINIMAL FLOOD HAZARD) AS INDICATED BY THE FLOOD INSURANCE RATE MAP (FIRM) MAP, NUMBER 48085C0155J, EFFECTIVE DATE 6/2/2009, IN COLLIN COUNTY, STATE OF TEXAS, WHICH IS THE CURRENT FLOOD INSURANCE RATE MAP FOR WHICH SAID PROPERTY IS SITUATED. PUBLISHED BY THE FEDERAL EMERGENCY MANAGEMENT AGENCY.

CONTRACTOR RESPONSIBLE TO FIELD VERIFY LOCATIONS AND ELEVATIONS OF EXISTING UTILITY TIE–INS AND CROSSINGS AS SHOWN ON SITE PLANS (SANITARY, STORM, WATER, GAS, ELECTRIC, PHONE, ETC.) PRIOR TO THE START OF CONSTRUCTION. CONTACT ALLAN WILEY AT GBC DESIGN, INC., 330–836–0228, WITH ANY CONCERNS OR CONFLICTS PRIOR TO THE START OF CONSTRUCTION. CONTRACTOR TO VERIFY THE THICKNESS OF ANY OFF–SITE PAVEMENT (ASPHALT AND CONCRETE) AND SIDEWALK SO THE RESTORATION WORK IS INCLUDED IN THE BID.

APPLICANT/DEVELOPER:
ANCHOR POINT MANAGEMENT GROUP
600 E. LAS COLINAS BLVD, SUITE 1700
IRVING, TX 75039
CONTACT: KARI KELLER
PHONE: (714) 724–9415
EMAIL: kkeller@anchorpointmg.com

PROPERTY OWNER:
ANNA 455 LP
5944 LUTHER LN STE 725
DALLAS, TX 75225
CONTACT:
PHONE:

ENGINEER:
GBC DESIGN, INC.
565 WHITE POND DRIVE
AKRON, OH 44320
CONTACT: ALLAN WILEY
PHONE: (330) 730–5506
EMAIL: awiley@gbcdesign.com

SURVEYOR:
GOLDEN LAND SURVEYING
4131 N.W. 122ND ST., SUITE 100
OKLAHOMA CITY, OK 73120
CONTACT: TROY DEE, P.S.
PHONE: (405) 849–6010
EMAIL: troy@goldenls.com

SP 26–0016

SITE PLAN

ANNA 455 ADDITION
BLOCK A, LOT 5R

0.7451 ACRES
CITY OF ANNA, COLLIN COUNTY, TEXAS

BOOK 2024, PAGE 92
INST. NO. 202401000043

DATE OF PREPARATION: 8/3/2026

GBC DESIGN, INC.
565 White Pond Dr. Akron, OH 44320-1123
Phone 330-836-0228 www.GBCDesign.com

7 BREW COFFEE
ANNA, TEXAS
1600 WEST WHITE STREET
ANNA, TX 75409

STATE OF TEXAS
JOHN E. WALSH
99108
LICENSED
PROFESSIONAL ENGINEER
8/5/2026

ENGINEER OF RECORD:
NAME: JOHN E. WALSH, P.E.
LICENSE NO. PE031986

PROJECT NUMBER: 58183
DATE: 8/5/2026
ISSUE: Permit
REVISION:

Permit

SITE PLAN

C-2.00

Item No. 5.d.

Planning & Zoning Commission Agenda
Staff Report

Meeting Date: 9/9/2026
Staff Contact: Everett Johnson

AGENDA ITEM:
Approve Rosamond Crossing Northeast Corner, Block A, Lot 10, Site Plan (SP 26-0017)

SUMMARY:
A restaurant on 1.0± acre on the north side of W. Rosamond Parkway, 650± feet east of N. Central Expressway. Zoned Planned Development/Regional Commercial (PD/C-2) (Ord. No. 1111-2024-08)

Recommended for approval as submitted.

BACKGROUND:

Date Submitted	8/5/2026	**Jurisdiction**	City of Anna
Owner	BVE Anna NEC SPE LLC		
Representative/Applicant	Plaza Street Fund 372 LLC		
Requested Action	Approval of the Site Plan		
Purpose	To build a restaurant		
Land Area	1.0± acre		
Location	The north side of W. Rosamond Parkway, 650± feet east of N. Central Expressway		
Comp Plan Designation	Regional Activity Center		
Existing Zoning	Planned Development/Regional Commercial (PD/C-2) (Ord. No. 1111-2024-08)		

Surrounding Properties			
	Land Use	**Zoning**	**Comp Plan Designation**
North	Commercial	Planned Development/Regional Commercial (PD/C-2)	Regional Activity Center
East	Commercial	Planned Development/Regional Commercial (PD/C-2)	Regional Activity Center

South	Commercial	Planned Development/Regional Commercial (PD/C-2)	Regional Activity Center
West	Commercial	Planned Development/Regional Commercial (PD/C-2)	Regional Activity Center

ATTACHMENTS:

1. Locator Map - Rosamond Crossing Northeast Corner, Block A, Lot 10, Site Plan (SP 26-0017)
2. Exhibit A - Rosamond Crossing Northeast Corner, Block A, Lot 10, Site Plan (SP 26-0017)

Rosamond Crossing Northeast Corner, Block A, Lot 10, Site Plan (SP 26-0017)

W ROSAMOND PKWY

W ROSAMOND PKWY

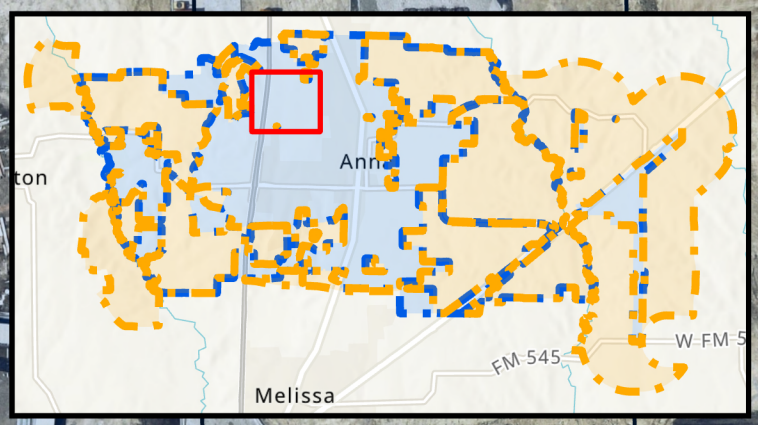

THE CITY OF Anna

N

Subject Property

ETJ

Parcels

City Limits

0 25 50 100 150 200 Feet

September 2026

linetypes:

- right of way
- property lines
- easements
- existing minor contour
- existing major contour

- sanm / sans — sanitary main / sanitary service
- storm sewer (existing)
- wtrm / wtrf / wtrd / wtri — water main / water service (fire) / water service (domestic) / water service (irrigation)
- gasm / gass — natural gas main / natural gas service schematic
- elpo / elpu — overhead primary electric / underground primary electric
- datu / datsu — underground cable/phone/data / underground cable/phone/data service

hatch legend:

- Fire Lane Access & Utility Easement
- New concrete sidewalk
- Proposed building
- Landscape Area (sod)

abbreviations:

POC	Point of Commencement
POB	Point of Beginning
(R1)	Record Dimension per Title Commitment
(R2)	Record Dimension per Instrument No. 2024000024415
(M)	Measure / calculated dimension
R/W	Right-of-way
C/L	Centerline
N/F	Now or formerly
TXDOT	Texas Department of Transportation
B.L.	Building Line
D.E.	Drainage Easement
DET.E.	Detention Easement
F.L.A.U.E.	Fire Lane Access Utility Easement
G.E.	Gas Easement
L.S.	Landscape Setback
O.P.R.C.C.T.	Official Public Records Collin County, Texas
P.R.C.C.T.	Plat Records Collin County, Texas
W.E.	Water Easement
S.E.	Sidewalk Easement

curve table:

CURVE	RADIUS	ARC LENGTH	CHORD LENGTH	CHORD BEARING	DELTA ANGLE	LOCATION
C1 (M)	1,140.00'	131.24'	131.17'	N 79°46'42" E	06°35'47"	OFF SUBJECT PROPERTY
C1 (R1)	1,140.00'	131.33'	131.26'	N 79°45'54" E	06°36'03"	OFF SUBJECT PROPERTY
C2 (M)	1,260.00'	279.89'	279.32'	N 82°49'13" E	12°43'39"	OFF SUBJECT PROPERTY
C2 (R1)	1,260.00'	279.85'	108.00'	N 78°55'16" E	04°54'45"	OFF SUBJECT PROPERTY
C3 (M)	115.00'	43.15'	42.90'	S 10°11'23" W	21°29'59"	SUBJECT PROPERTY
C3 (R1)	115.00'	43.15'	42.90'	S 10°11'23" W	21°29'50"	SUBJECT PROPERTY
C4 (M)	115.00'	43.15'	42.90'	S 10°11'23" W	21°29'59"	SUBJECT PROPERTY
C4 (R1)	115.00'	43.15'	42.90'	S 10°11'23" W	21°29'50"	SUBJECT PROPERTY

legend:

- sanitary manhole
- storm manhole
- service cleanout
- force main release valve
- rectangular structure
- circular structure
- fire hydrant
- water valve
- water meter
- backflow preventer
- natural gas meter
- gas line marker sign
- gas valve
- service transformer (pad mount)
- primary switch gear
- electric pole
- light pole
- electric meter
- electric manhole
- street light
- pedestrian street light
- cable/phone/data junction box
- guy wire
- sign
- double sided sign
- end section
- downspout location
- trash receptacle
- telephone handhole
- telephone pedestal
- telephone manhole

construction notes: (#)

1. Prop. drive-thru menu board and speaker box with detection loop provided by others. Footing and sign installation by GC, run electrical per electrical site plan and vendor requirements.
2. Prop. striped pedestrian path through drive aisle - 4" solid white.
3. Prop. detection loop furnished by other. Installed by GC.
4. Prop. vertical clearance bar per detail 2/A1.3 provided by others. Footing and clearance bar installation by GC.
5. Prop. 7'-0" high double trash enclosure, masonry construction consistent w/primary building and opaque metal gates. Details on sheet A1.2 & structural plans.
6. Prop. drive-thru directional painted directional marking per details.
7. Prop. ADA parking stall, pavement per civil details. Where applicable, see detail 2/A1.4 for concrete wheelstops.
8. Prop. 4" solid white striping, typ.
9. Prop. 22' light pole on a 3' base (overall height above finish grade 25') per electrical specifications, typ.
10. Prop. white painted directional markings.
11. Prop. concrete curb and gutter per civil drawings.
12. Prop. concrete paving to meet Geotechnical specifications and per civil drawings.
13. Prop. concrete sidewalk per civil drawings.
14. Handicap parking sign per detail 13/A0.3.
15. Prop. handicap ramp per civil drawings.
16. Prop. Knox Box, furnish and install at 60" a.f.g. for fire department access. Contact Fire Marshal for ordering information and to coordinate location prior to installation.
17. Prop. flagpole, 35'-0 high, GC shall install electrical per electrical site plan.
18. Prop. bollard & decorative screening at entrance doors.
19. Prop. double 4" solid white striping at drive-thru lane, typ.
20. Prop. location of free-standing monument sign, separate sign permit required. Provide conduit and power per electrical specifications. GC shall install sign base. Sign shall not exceed 100 sq. ft. & 8'-0" in height. Sign shall maintain at least 5'-0" from front property lines & 10' from adjacent property lines.
21. Prop. Freddy's 'watch for pedestrian' sign, see details.
22. Prop. Grease interceptor per plumbing specifications.
23. Prop. pad transformer per civil utility plan.
24. Prop. storm inlet per civil.
25. Prop. architectural fiber cement screenwall, detail 3/A1.4, for MDP & CT cabinet, see electrical
26. Prop. patio seating with metal canopy & laser cut prefin. steel Starflite Mfr. screen panels , sheet A1.4, color: black.
27. Prop. 8' sidewalk by others per separate contract.
28. Prop. turn lane by others per separate contract.
29. Prop. curb inlet by others per separate contract.
30. Prop. stop sign by others per separate contract.
31. Prop. awning above storefront entrance doors, windows, and exterior doors, typ.
32. Prop. awning at drive-thru window, typ.
33. Prop. 4" conc. filled pipe bollard, painted Freddy's Red, typ.
34. Prop. 2" domestic water service line per civil utility plan.
35. Prop. 12" water main per separate contract.
36. Prop. 6" sanitary service line per civil utility plan.
37. Prop. 8" sanitary main per separate contract.
38. Prop. 48" storm line per separate contract.
39. Prop. fire hydrant per separate contract.
40. Prop. gas service line per civil utility plan.
41. Prop. elec. service per civil utility plan.

EXHIBIT A

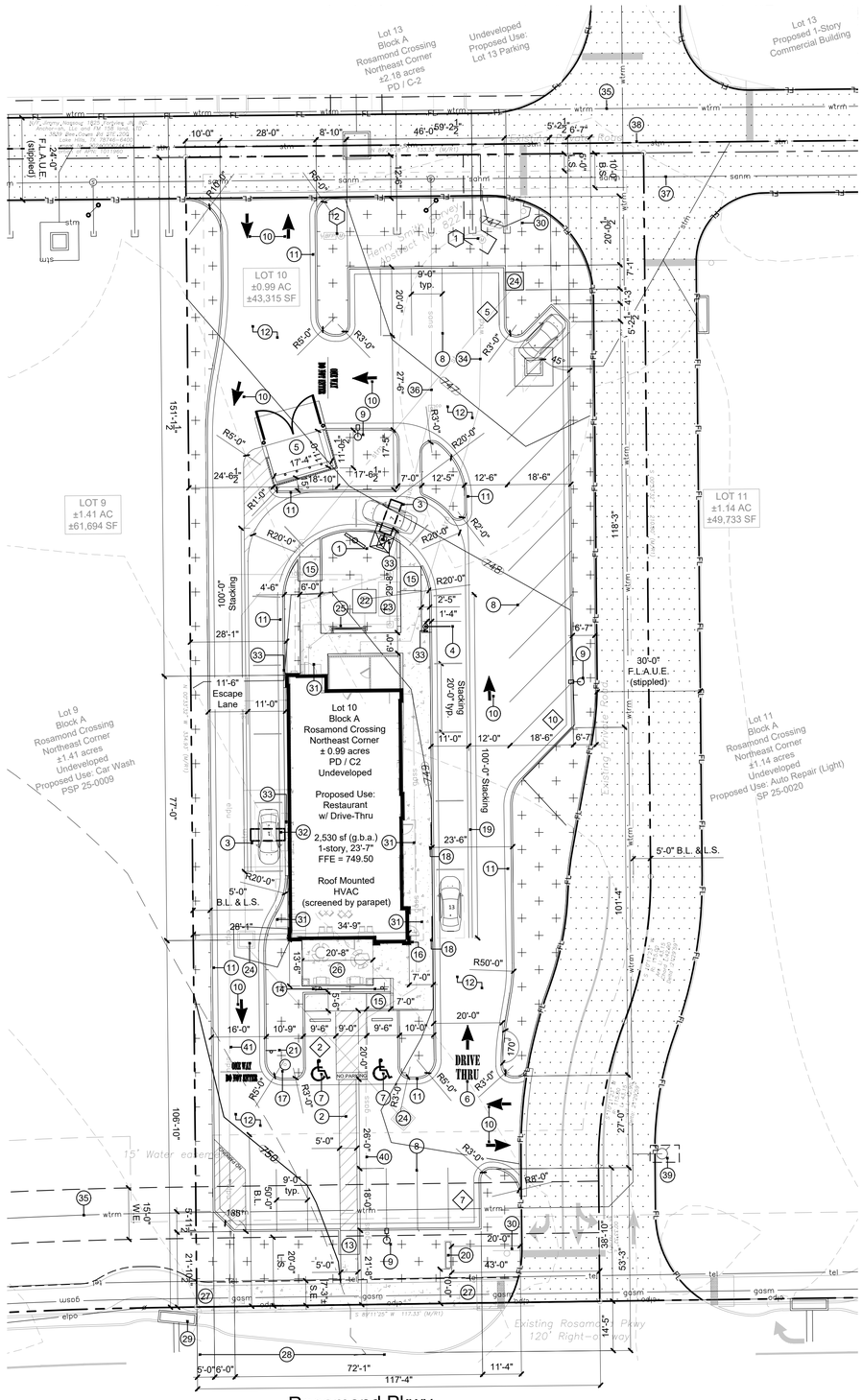

1" = 20'-0"

2 Site Plan
scale: 1" = 20'-0"

north

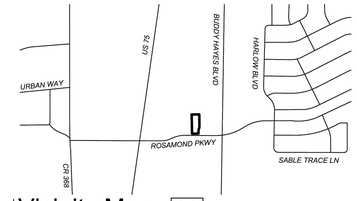

1 Vicinity Map
scale: n.t.s.

north

site data summary table:

Item	*Lot 10*
General Site Data	
Zoning	PD (Ordinance No. 1111-2024-08)
Land Use	Undeveloped
Proposed Use	Quick Service Restaurant w/ Drive-thru
Lot Area (sq. ft. & acres)	43,315 sq. ft., 0.99 acres
Lot Dimensions	337 X 133
Building Footprint Area (sq. ft.)	2,530 sq. ft.
Building Height (# stories)	1
Max Building Height per 2021 IBC (ft.)	35'-0"
Actual Building Height (ft.)	23'-7"
Lot Coverage (percent - x.xx%)	5.84%
Pervious Area (%)	21.39%
Impervious Area (%)	78.61%
Parking	
Parking Ratio	10 spaces / 1,000 sq. ft.
Required Parking (# spaces)	25
Total Provided Parking (# spaces)	23 w/ Planning Director Approval
Required Accessible Parking (# spaces)	2
Provided Accessible Parking (# spaces)	2
Landscaping	
Required Landscape Area (sq. ft.)	4331 sq. ft., 10.00%
Provided Landscape Area	9,265 sq. ft., 21.39%
**See landscape plans for complete Landscape Table*	

Flood Zone Certification:

By graphic plotting only, this property is in Zone "X" of the flood insurance rate map, community panel NO. 48085C0155J, which bears an effective date of 6/2/2009 and is not in a special flood hazard area. Zone "X" - area of minimal flood hazard, usually depicted on FIRMsa above the 500-year flood level. Zone "X" is the area determined to be outside the 500-year flood and protected by levee from 100-year flood.

general notes:

- All construction shall conform to the standards and specifications of Anna, TX.
- The general contractor shall contact all utility companies prior to the start of construction and verify the location and depth of any utilities that may be encountered during construction.
- The contractor shall field verify exist. surface & subsurface ground conditions prior to start of construction.
- Slopes shall maintain a maximum 3:1 slope.
- The contractor shall be responsible for obtaining all required permits, paying all fees, and otherwise complying with all applicable regulations governing the project.
- General contractor and all subcontractors must register with the Building Department before issuance of permit.
- Energy code requirements and inspections are to be performed by a third party inspector, supplied by General Contractor and/or owner. The City will not perform energy related inspections, however, documentation is required to verify compliance of the energy code requirements.
- Place silt fence per civil for erosion control.
- Provide a temporary gravel access drive to prevent mud from being deposited onto the adjacent road.
- Prior to installing any structure on a public storm sewer, the contractor shall submit shop drawings for the structure(s). Installation shall not occur until drawings have been approved by public works.
- Prior to installing, constructing, or performing any work on the public storm sewer line (including connecting private drainage to the storm system) contact the city for inspection of the work. Contact must be made at least 48 hours prior to the start of work.
- Connections to the public storm sewer between structures will not be permitted.
- All exterior utility services shall be painted to match the primary building color.
- Prior to final inspection, the general contractor shall meet with the Anna Fire Department to designate fire lane and fire lane sign locations to be installed per Fire Department direction and requirements.
- New & existing buildings shall be provided with an approved address identification. The address shall be legible and placed in a position visible from the street or road fronting the property. The characters shall contrast with their background. Each character shall be a min. 4" high with a min. stroke width of 1/2".
- A Knox Box will be installed on the front of the building facing the street or road.
- Caulk joint at perimeter of building around sidewalk. Color to match building colors. GC shall take care not to seal any exterior finish drainage elements.
- In no case where a building is erected, converted or enlarged for commercial manufacturing, or business purposes shall the public right-of-way be used for parking or loading and unloading of materials.

Water Meter Schedule

ID	Type	Size	Quantity	San. Sewer	Remarks
⊙	Domestic	1.5"	1	6"	Proposed
⊙	Irrigation	1"	1	N/A	Proposed

SITE PLAN - SP 26-0017
ROSAMOND CROSSING NORTHEAST CORNER

(Block A, Lot 10) ±0.99 ACRES
Henry Smith Survey, Abstract No. 822
City of Anna, Collin County, Texas

Submitted 08/19/2026

Owner:
Liberty 75 LB, ET AL
370 W. Broadway
Prosper, TX 750748
Contact: Teague Griffin
p: 214.912.6156

Developer:
Plaza Street Fund 372, LLC
3400 College Blvd, Suite 200
Leawood, KS 66211
Contact: Landon Brack
p: 816.514.0126

Engineer:
Hilary Zerr, P.E., LEED AP
Davidson A + E
4301 Indian Creek Parkway
Overland Park, KS 66207
p: 913.451.9390

davidson
architecture&engineering
4301 Indian Creek Parkway
Overland Park, KS 66207
phone: 913.451.9390
www.davidsonae.com

a new restaurant for
Freddy's
Rosamond Crossing Northeast Corner - Lot 10
Anna, TX

date
08.19.2026
drawn by
KWE
checked by
DAE
revisions

sheet number
A1.1
drawing type
site plan
project number
23006-29

Item No. 5.e.

Planning & Zoning Commission Agenda
Staff Report

Meeting Date: 9/9/2026
Staff Contact: Nyssa Galatas

AGENDA ITEM:
Approve Lopez Addition of Anna, Block A, Lots 1 and 2, Final Plat (FP 26-0012)

SUMMARY:
A final plat for two single-family lots on 0.8± acre on the south side of Sixth Street, 300± feet east of S. Easton Drive. Zoned Single-Family Residential 7.2 (SF-7.2) (Ord. 313-2007)

Recommended for approval as submitted.

BACKGROUND:

Date Submitted	8/5/2026	**Jurisdiction**	City of Anna
Owner	Norma Sambrano		
Representative/Applicant	Surdukan Surveying Inc		
Requested Action	Approval of the Final Plat		
Purpose	To plat two single-family lots		
Land Area	0.9± acre		
Location	The south side of Sixth Street, 300± feet east of S. Easton Drive		
Comp Plan Designation	Urban Living		
Existing Zoning	Single-Family Residential 7.2 (SF-7.2) (Ord. 313-2007)		

Surrounding Properties

	Land Use	**Zoning**	**Comp Plan Designation**
North	Single-Family Residential	Single-Family Residential 7.2 (SF-7.2)	Urban Living
East	Single-Family Residential	Single-Family Residential 7.2 (SF-7.2)	Urban Living
South	Single-Family Residential	Single-Family Residential 7.2 (SF-7.2)	Urban Living

West	Single-Family Residential	Single-Family Residential 7.2 (SF-7.2)	Urban Living

ATTACHMENTS:

1. Locator - Lopez Addition of Anna, Block A, Lots 1 and 2, Final Plat (FP 26-0012)
2. Exhibit A - Lopez Addition of Anna, Block A, Lots 1 and 2, Final Plat (FP 26-0012)

Lopez Addition of Anna, Block A, Lots 1 and 2, Final Plat (FP 26-0012)

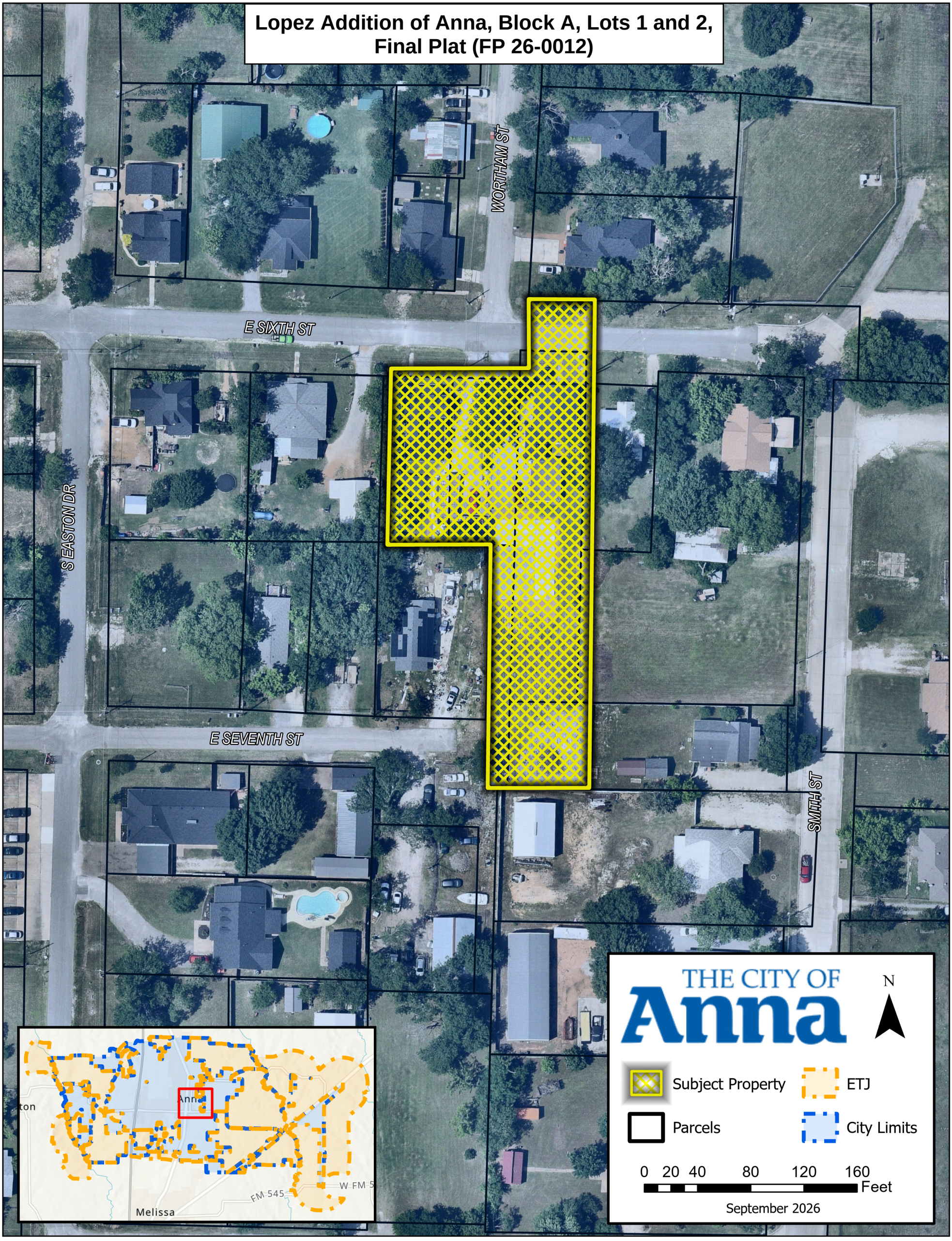

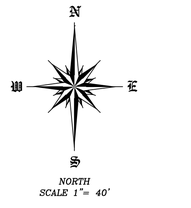

LEGEND

R.M. = REFERENCE MONUMENT
CIRS = CAPPED 1/2" IRON ROD SET STAMPED (4613)
CIRF = CAPPED 1/2" IRON ROD FOUND
IRF = IRON ROD FOUND
INST. NO. = INSTRUMENT NUMBER
D.R.C.C.T. = DEED RECORDS OF COLLIN COUNTY, TEXAS
O.P.R.C.C.T. = OFFICIAL PUBLIC RECORDS OF COLLIN COUNTY, TEXAS
P.R.C.C.T. = PLAT RECORDS OF COLLIN COUNTY, TEXAS

LINE TABLE		
LINE	BEARING	DISTANCE
L1	S 88°50'27" E	105.75'
L2	N 01°07'31" E	52.27'
L3	S 87°59'38" E	50.01'

NOTES:

1. The original copy will have original signatures, stamp seal and an impression seal.
2. Copyright 2026, Surdukan Surveying, Inc.
3. This survey is being provided solely for the use of the current parties.
4. This survey is subject to all easements of record.
5. The basis of bearings is the north line of the survey with a bearing call of N 88°52'40" W which is derived from ALLTERRA CENTRAL RTK Network, Texas State Plane Coordinates System, Nad83, North Central Zone, Nad 83 (CORS96) Epoch 2002.0.
6. Existing Electric is provided by Grayson Collin Electris Cooperative.
7. Existing Water is provided by City of Anna.
8. Existing Sanitary Sewer is provided by City of Anna.
9. The purpose of this plat is to create 2 Lots from 3 tracts of land and an abandoned part of a 60' Wide Street Reservation.

NOTICE:

Selling a portion of this addition by metes and bounds is a violation of the city Subdivision Ordinance and State platting statutes and is subject to fines and withholding of utilities and building certificates.

FLOODPLAIN NOTE:

According to the Flood Insurance Rate Map (FIRM) Map No. 48085C0160 J, dated June 2, 2009, prepared by Federal Emergency Management Agency (FEMA) for Collin County, Texas, this tract lies with in Zone X (Unshaded).

EXHIBIT A

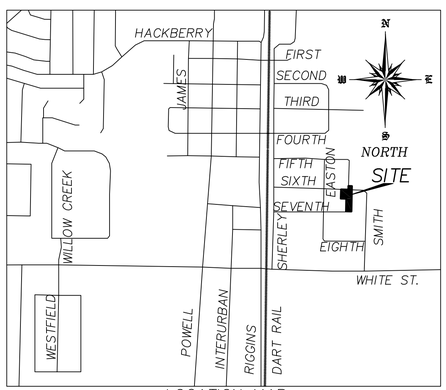

LOCATION MAP
NTS

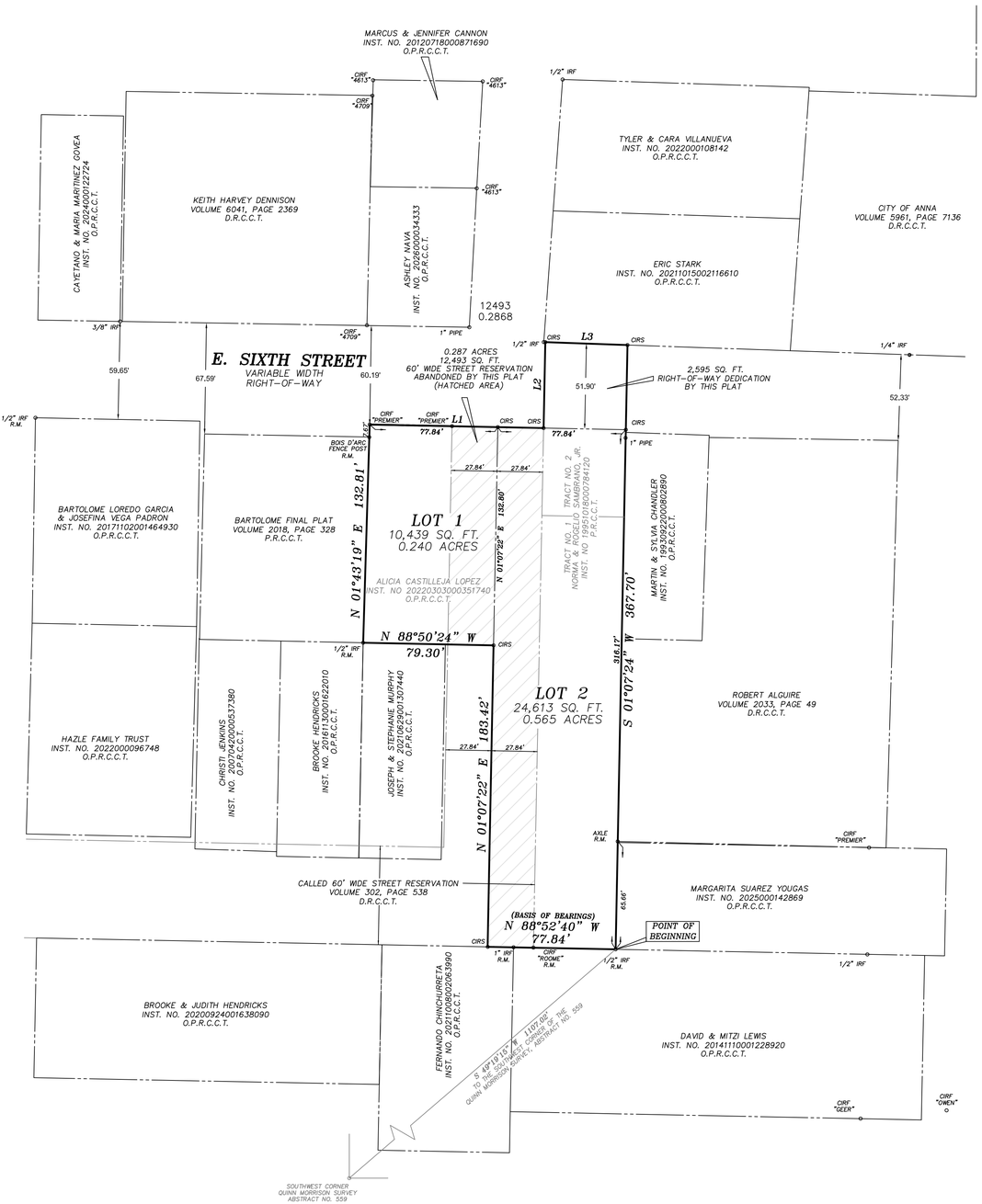

STATE OF TEXAS §
COUNTY OF COLLIN §

I, DAVID J. SURDUKAN, a Registered Professional Land Surveyor in the State of Texas, do hereby certify that I prepared this plat from an actual and accurate survey of the land and that the corner monuments shown thereon were properly placed, under my personal supervision, in accordance with the subdivision regulations of the City of Anna, Texas.

PRELIMINARY, NOT FOR RECORDING PURPOSES

David J. Surdukan
Registered Professional Land Surveyor
Registration No. 4613

BEFORE me, the undersigned authority, a Notary Public in and for said County and State, on this day personally appeared David J. Surdukan, known to me to be the person or persons whose name is subscribed to the foregoing instrument, and acknowledged to me that he executed the same in the capacity herein stated and the act and deed of said company.

GIVEN UNDER MY HAND AND SEAL OF OFFICE, this ____ day of _____, 2026.

Notary Public in and for Collin County

My Commission Expires: December 11, 2028.

OWNER'S CERTIFICATE

STATE OF TEXAS:
COUNTY OF COLLIN:

WHEREAS, ROGELIO SAMBRANO, JR., NORMA SAMBRANO, and ALICIA CASTILLEJA LOPEZ, are the owners of tracts of land situated in the Quinn Morrison Survey, Abstract No. 559, in the City of Anna, Collin County, Texas, being all of "Tract No. 1," a 50'X263' tract of land and part of "Tract No. 2," a 50'x125' tract of land as described in Warranty Deed with Vendor's Lien conveyed to Rogelio Sambrano, Jr. and wife, Norma Sambrano as recoreded in Instrument No. 19951018000784120 of the Official Public Records of Collin County, Texas (O.P.R.C.C.T.), being all of a 50'x125' tract of land conveyed to Alicia Castilleja Lopez in Affidavit of Heirship as recorded in Instrument No. 20220303000351740, O.P.R.C.C.T., being part of a "60' Wide Street Reservation" first appearing in Volume 302, Page 538 of the Deed Records of Collin County, Texas, D.R.C.C.T.. and being more particularly described in metes and bounds as follows;

BEGINNING at a 1/2" iron rod found for the southeast corner of said "Tract No. 1" and said iron rod found being in the north line of a tract of land conveyed to David and wife, Mitzi Lewis as recorded in Instrument No. 20141110001228920, O.P.R.C.C.T.;
THENCE N 88°52'40" W a distance of 77.84' to a 1/2" iron rod with yellow plastic cap stamped "4613" set for corner in the found centerline of a called 60' Wide Street Reservation first appearing in 1939 in Volume 302, Page 538, D.R.C.C.T.;
THENCE N 01°07'22" E with the centerline of the called 60' Wide Street Reservation for a distance of 183.42' to a 1/2" iron rod with yellow plastic cap stamped "4613" set for corner;
THENCE N 88°50'24" W a distance of 79.30' to a 1/2" iron rod found for the southeast corner of the Bartolome Final Plat, an addition to the City of Anna, Collin County, Texas as recorded in Volume 2018, Page 328 of the Plat Records of Collin County, Texas;
THENCE N 01°43'19" E a distance of 132.81' to a 1/2" iron rod with orange plastic cap stamped "PREMIER" found in the apparent south line of E. Sixth Street for the northwest corner of said Lopez tract of land;
THENCE S 88°50'27" E with the apparent south line of E. Sixth Street for a distance of 105.75' to a 1/2" iron rod with yellow plastic cap stamped "4613" set for corner in the west line of said "Tract No. 2";
THENCE N 01°07'31" E across E. Sixth Street for a distance of 52.27' to a 1/2" iron rod with yellow plastic cap stamped "4613" set for corner in the south line of a tract of land conveyed to Eric Stark in instrument No. 20211015002116610, O.P.R.C.C.T.;
THENCE S 87°59'38" E with the south line of said Stark tract of land for a distance of 50.01' to a /2" iron rod with yellow plastic cap stamped "4613" set for corner;
THENCE S 01°07'24" W passing the southeast corner of said "Tract No. 2" and the northeast corner of said "Tract No. 1" at a distance of 51.56' and continuing with the east line of said "Tract No. 1" for a total distance of 367.70' to the POINT OF BEGINNING, and containing 37,647 Square Feet or 0.864 acres of land.

OWNER'S DEDICATION

STATE OF TEXAS:
COUNTY OF COLLIN:

NOW, THEREFORE, KNOW ALL MEN BY THESE PRESENTS:

THAT Rogelio Sambrano, Jr., Norma Sambrano, and Alicia Castilleja Lopez, do hereby adopt this plat designating the hereinabove described property as the LOPEZ ADDITION OF ANNA, BLOCK A, LOTS 1 & 2, an addition to the City of Anna, Collin County, Texas, and do hereby dedicate, in fee simple, to the public use forever, the streets and alleys shown thereon. The streets and alleys are dedicated for street purposes. The easements and public use areas, as shown, are dedicated for the public use forever, for the purposes indicated on this plat. In addition, utility easements may also be used for the mutual use and accommodation of all public utilities desiring to use or using the same unless the easement limits the use to particular utilities, said use by public utilities being subordinate to the public's and City of Anna's use thereof. The City of Anna and public utility entities shall have the right to remove and keep removed all or parts of any buildings, fences, trees, shrubs, or other improvements or growths which may in any way endanger or interfere with the construction, maintenance, or efficiency of their respective systems in said easements. The City of Anna and public utility entities shall at all times have the full right of ingress and egress to or from their respective easements for the purpose of constructing, reconstructing, inspecting, patrolling, maintaining, reading meters, and adding to or removing all or parts of their respective systems without the necessity at any time of procuring permission from anyone.

This approved subject to all platting ordinances, rules, and regulations of the City of Anna, Texas.

WITNESS my hand this the _____ day of _____, 2026.

_____
Rogelio Sambrano, Jr. – OWNER

_____
Norma Sambrano – OWNER

_____
Alicia Castilleja Lopez – OWNER

PREELIMINARY, NOT FOR RECORDING PURPOSES

STATE OF TEXAS:
COUNTY OF COLLIN:

BEFORE me, the undersigned authority, a Notary Public in and for said County and State, on this day personally appeared Rogelio Sambrano, Jr., known to me to be the person or persons whose name is subscribed to the foregoing instrument, and acknowledged to me that he executed the same in the capacity herein stated and the act and deed of said company.

GIVEN UNDER MY HAND AND SEAL OF OFFICE, this _____ day of _____, 2026.

_____
Notary Public in and for Collin County, Texas

My Commission Expires: _____

STATE OF TEXAS:
COUNTY OF COLLIN:

BEFORE me, the undersigned authority, a Notary Public in and for said County and State, on this day personally appeared Norma Sambrano, known to me to be the person or persons whose name is subscribed to the foregoing instrument, and acknowledged to me that he executed the same in the capacity herein stated and the act and deed of said company.

GIVEN UNDER MY HAND AND SEAL OF OFFICE, this _____ day of _____, 2026.

_____
Notary Public in and for Collin County, Texas

My Commission Expires: _____

STATE OF TEXAS:
COUNTY OF COLLIN:

BEFORE me, the undersigned authority, a Notary Public in and for said County and State, on this day personally appeared Alicia Castilleja Lopez, known to me to be the person or persons whose name is subscribed to the foregoing instrument, and acknowledged to me that he executed the same in the capacity herein stated and the act and deed of said company.

GIVEN UNDER MY HAND AND SEAL OF OFFICE, this _____ day of _____, 2026.

_____
Notary Public in and for Collin County, Texas

My Commission Expires: _____

CERTIFICATE OF APPROVAL

APPROVED on this the _____ day of _____, 2026, by the Planning & Zoning Commission, City of Anna, Texas.

PRELIMINARY, NOT FOR RECORDING PURPOSES

_____
Planning & Zoning Commission Chair

_____
Director of Development Services

PRELIMINARY, NOT FOR RECORDING PURPOSES

FINAL PLAT

LOPEZ ADDITION OF ANNA

BLOCK A, LOTS 1 & 2

BEING 0.864 ACRES IN THE
CITY OF ANNA, COLLIN COUNTY, TEXAS
GUINN MORRISON SURVEY, ABSTRACT NO. 559

RESERVED FOR COUNTY RECORDING INFORMATION

OWNERS
ROGELIO SAMBRANO, JR.
NORMA SAMBRANO
P.O. BOX 891
ANNA, TEXAS 75409
(972) 439-8013

OWNERS
ALICIA CASTILLEJA LOPEZ
P.O. BOX 162
ANNA, TEXAS 75409
(972) 998-3191

SURVEYOR
SURDUKAN SURVEYING, INC.
P.O. BOX 126
ANNA, TEXAS 75409
(972) 924-8200
FIRM NO. 10069500

SCALE 1" = 40' DATE: August 5, 2026 JOB No. 2026-92

Item No. 5.f.

Planning & Zoning Commission Agenda
Staff Report

Meeting Date: 9/9/2026
Staff Contact: Ashley Saucedo

AGENDA ITEM:
Approve Sherley Farms, Phase 1B, Amenity Center, Block X, Lot 1, Site Plan (SP 26-0018)

SUMMARY:
An amenity center on 12.1± acres at the southwest corner of the intersection of Homestead Road and Wild Brothers Lane.

Recommended for approval as submitted.

BACKGROUND:

Date Submitted	8/5/2026	**Jurisdiction**	City of Anna
Owner	Tellus Texas III LLC		
Representative/Applicant	Spiars Engineering & Surveying		
Requested Action	Approval of the Site Plan		
Purpose	To build an Amenity Center		
Land Area	12.1± acres		
Location	The southwest corner of the intersection of Homestead Road and Wild Brothers Lane		
Comp Plan Designation	Suburban Living		
Existing Zoning	Planned Development/Single-Family Residential (PD/SF) (Ord. No. 1137-2025-02)		

Surrounding Properties

	Land Use	**Zoning**	**Comp Plan Designation**
North	Single-Family Residential	Planned Development/Single-Family Residential (PD/SF) (Ord. No. 1137-2025-02)	Suburban Living
East	Single-Family Residential	Planned Development/Single-Family Residential (PD/SF) (Ord. No. 1137-2025-02)	Suburban Living

South	Single-Family Residential	Planned Development/Single-Family Residential (PD/SF) (Ord. No. 1137-2025-02)	Suburban Living
West	Single-Family Residential	Planned Development/Single-Family Residential (PD/SF) (Ord. No. 1137-2025-02)	Suburban Living

ATTACHMENTS:

1. Locator Map - Sherley Farms, Phase 1B, Amenity Center, Block X, Lot 1, Site Plan (SP 26-0018)
2. Exhibit A - Sherley Farms, Phase 1B, Amenity Center, Block X, Lot 1, Site Plan (SP 26-0018)

Sherley Farms, Phase 1B, Amenity Center, Block X, Lot 1, Site Plan (SP 26-0018)

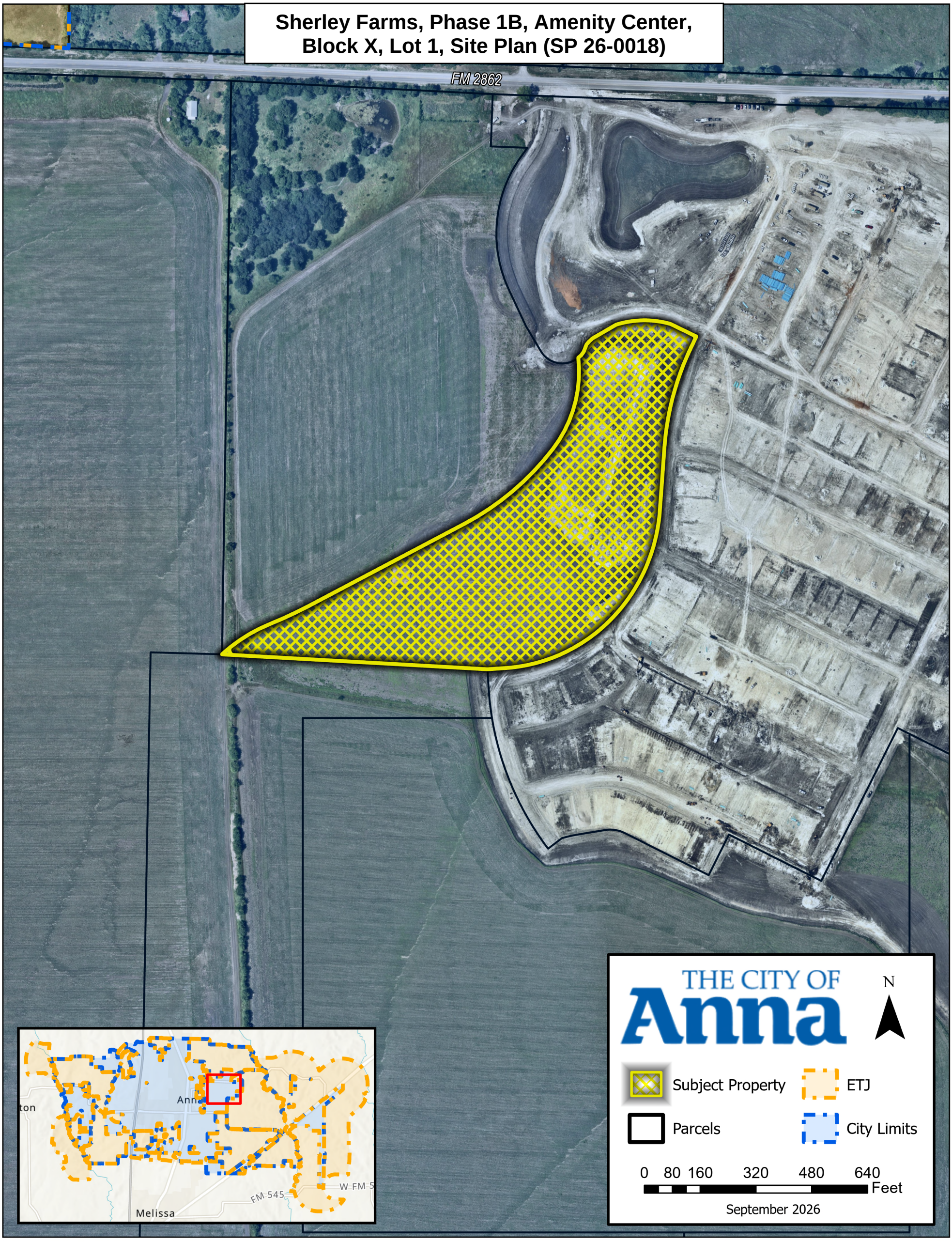

LEGEND

- Proposed Firelane, Access & Utility Easement
- Existing Storm Sewer
- Proposed Storm Sewer
- Existing Water & Fittings
- Existing Fire Hydrants
- Proposed Water
- Proposed Fire Hydrants
- Existing Sanitary Sewer
- Proposed Sanitary Sewer & Manhole
- Existing Contours (649 / 650)
- Proposed Contours (649 / 650)
- Phase Line
- T — Proposed Electrical Transformer
- (1) — Proposed Building Number
- (1) — Proposed Water Meter Number
- LS — Proposed Parking Lot Landscape Area
- Cab. — Proposed Pool Cabana
- BFR — Proposed Barrier Free Ramp

Item	**Block X, Lot 1**	
General Site Data		
Zoning (from Zoning Map)	PD 25-001	
Land Use (from Zoning Ordinance)	Community Center - Private	
Gross Lot Area (square feet & acres)	530,343 S.f. / 12.175 Acres	
Net Lot Area (square feet & acres)	520,095 S.F. / 11.940 Acres	
Building Footprint Area (square feet)	7,610 S.F.	
Total Building Area (square feet)	7,610 S.F.	
Building Height (# stories)	1 Story	
Building Height (feet – distance to tallest building element)	Bldg. 1	24'-6"
	Bldg. 2	24'-6"
	Bldg. 3	22'-4"
Lot Coverage (percent – x.xx%)	1.43%	
Parking		
Parking Ratio (from Zoning Ordinance)	2.5/1,000 S.F.	
Required Parking (# spaces)	19 Spaces	
Total Provided Parking (# spaces)	37 Spaces	
Accessible Parking Required (# spaces)	2 Spaces	
Accessible Parking Provided (# spaces)	2 Spaces	
Landscape Area (including turf areas)		
Required internal landscape area (square feet - 8 square feet per parking space	296 S.F.	
Additional interior landscape area provided (square feet)	459,613 S.F.	
Total Landscape Area (square feet)	459,909 S.F.	

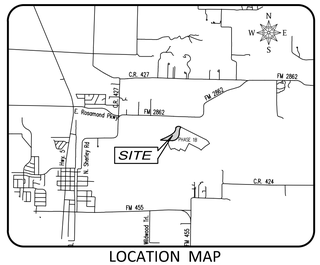

LOCATION MAP
1"=5,000'

Water Meter & Sewer Schedule					
I.D.	Type	Size	No.	Sewer	Type
(1)	Domestic	2"	1	4"	Prop.
(2)	Domestic	2"	1	4"	Prop.
(3)	Irrigation	2"	1	–	–
(2)	Domestic	2"	1	4"	Prop.
(3)	Domestic	2"	1	4"	Prop.

SITE PLAN GENERAL NOTES:

1. All proposed paved surfaces will be constructed of concrete.
2. No appurtenance between the height of 2.5' and 10' may be placed in the visibility triangles.
3. All accessible parking locations represented in this plan are preliminary in nature. Exact locations may be revised at a later date. Site plan will meet applicable State and Federal accessibility requirements.
4. The dumpster enclosure shall be 7' masory walls with 7' solid gates. Material for the dumpster enclosure shall match the materials used for the proposed building facades.

SP 26-0018

SITE PLAN

SHERLEY FARMS PHASE 1B AMENITY CENTER

LOT 1, BLOCK X
12.175 ACRES
CITY OF ANNA, COLLIN COUNTY , TEXAS
G. MORRISON SURVEY ~ ABSTRACT NO. 559

ENGINEER / SURVEYOR
Spiars Engineering, Inc.
765 Custer Road, Suite 100
Plano, TX 75075
Telephone: (972) 422-0077
TBPELS No. F-2121 And No. F-10043100
Contact: Colton Smith

OWNER / APPLICANT
Tellus Texas III, LLC
5301 Headquarters Dr., Ste. 120
Plano, Texas 75024
Telephone: (469) 532-0689
Contact: Justin Craig

August 25, 2026 | Scale: 1" = 50' | SEI Job No.: 26-117 | Sheet 1 of 1

Plotted by: dpoppapre Plot Date: 9/25/2026 3:57 PM
Drawing: G:\2026_JOBS\26-117 Sherley Farms Amenity Center #1\CAD\Site Plan.dwg Saved By: Dpoppapre Save Time: 9/25/2026 3:39:01 PM

Item No. 5.g.

Planning & Zoning Commission Agenda
Staff Report

Meeting Date: 9/9/2026
Staff Contact: Everett Johnson

AGENDA ITEM:
Approve Finley Park, Block A, Lot 1, Site Plan (SP 26-0011)

SUMMARY:
A public park on 28.4± acres on the south side of E. Finley Boulevard, 150± feet east of Clark Street.

Recommended for approval as submitted.

BACKGROUND:

Date Submitted	8/5/2026	**Jurisdiction**	City of Anna
Owner	City of Anna		
Representative/Applicant	Dalan Walker		
Requested Action	Approval of the Site Plan		
Purpose	to build a new park		
Land Area	28.4± acres		
Location	The south side of E. Finley Boulevard, 800± feet east of Jamie Street		
Comp Plan Designation	Parks		
Existing Zoning	Planned Development/Single-Family 7.2 (PD/SF-7.2) (Ord. No. 627-2013)		

Surrounding Properties			
	Land Use	**Zoning**	**Comp Plan Designation**
North	Single-Family Residential	Planned Development/Single-Family 7.2 (PD/SF-7.2) (Ord. No. 627-2013)	Suburban Living
East	Vacant	N/A (ETJ)	Suburban Living
South	Single-Family Residential	N/A (ETJ)	Estate Residential

West	Single-Family Residential	Planned Development/Single-Family 7.2 (PD/SF-7.2) (Ord. No. 627-2013)	Suburban Living

ATTACHMENTS:

1. Locator Map - Finley Park, Block A, Lot 1, Site Plan (SP 26-0011)
2. Exhibit A - Finley Park, Block A, Lot 1, Site Plan (SP 26-0011)

Finley Park, Block A, Lot 1, Site Plan (SP 26-0011)

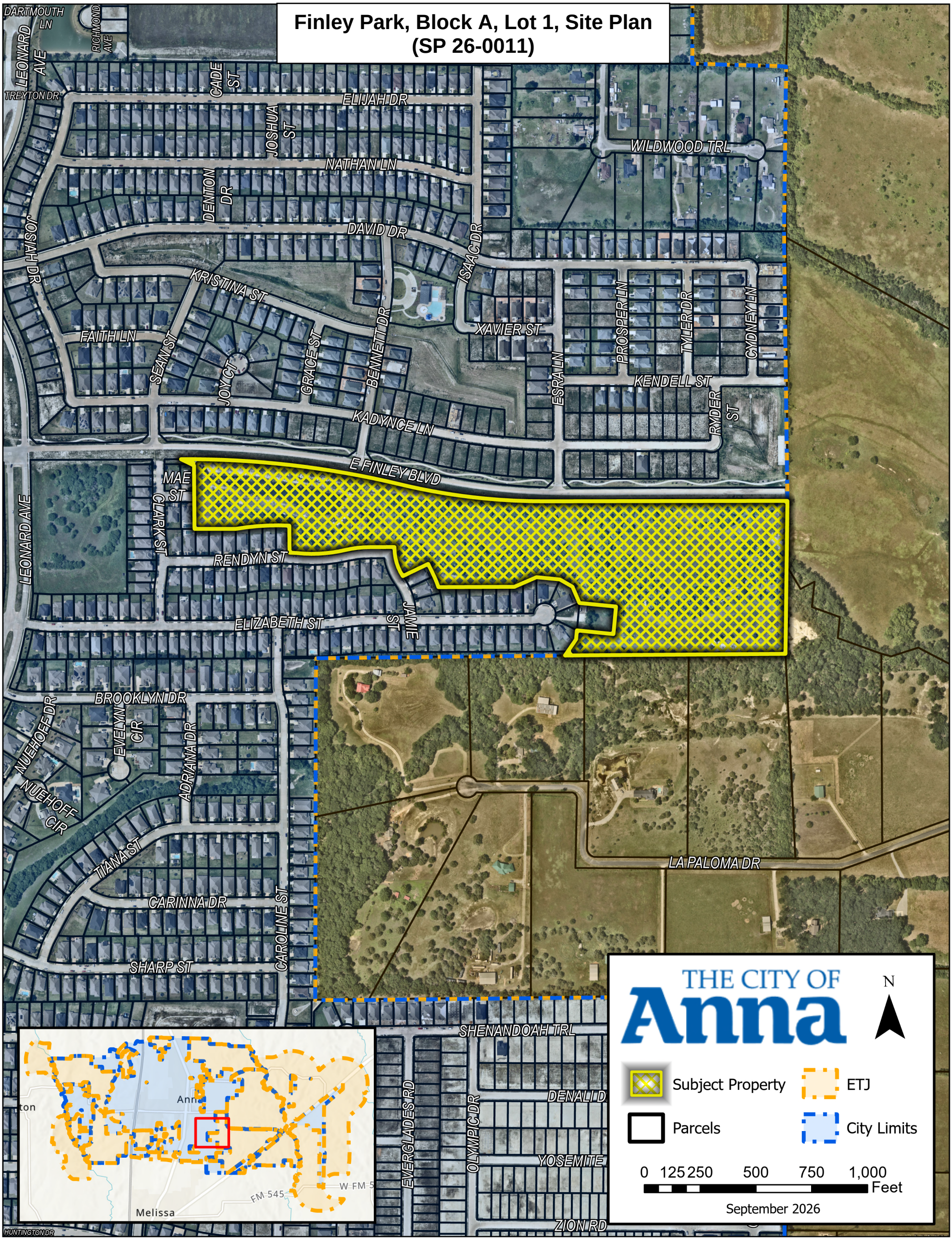

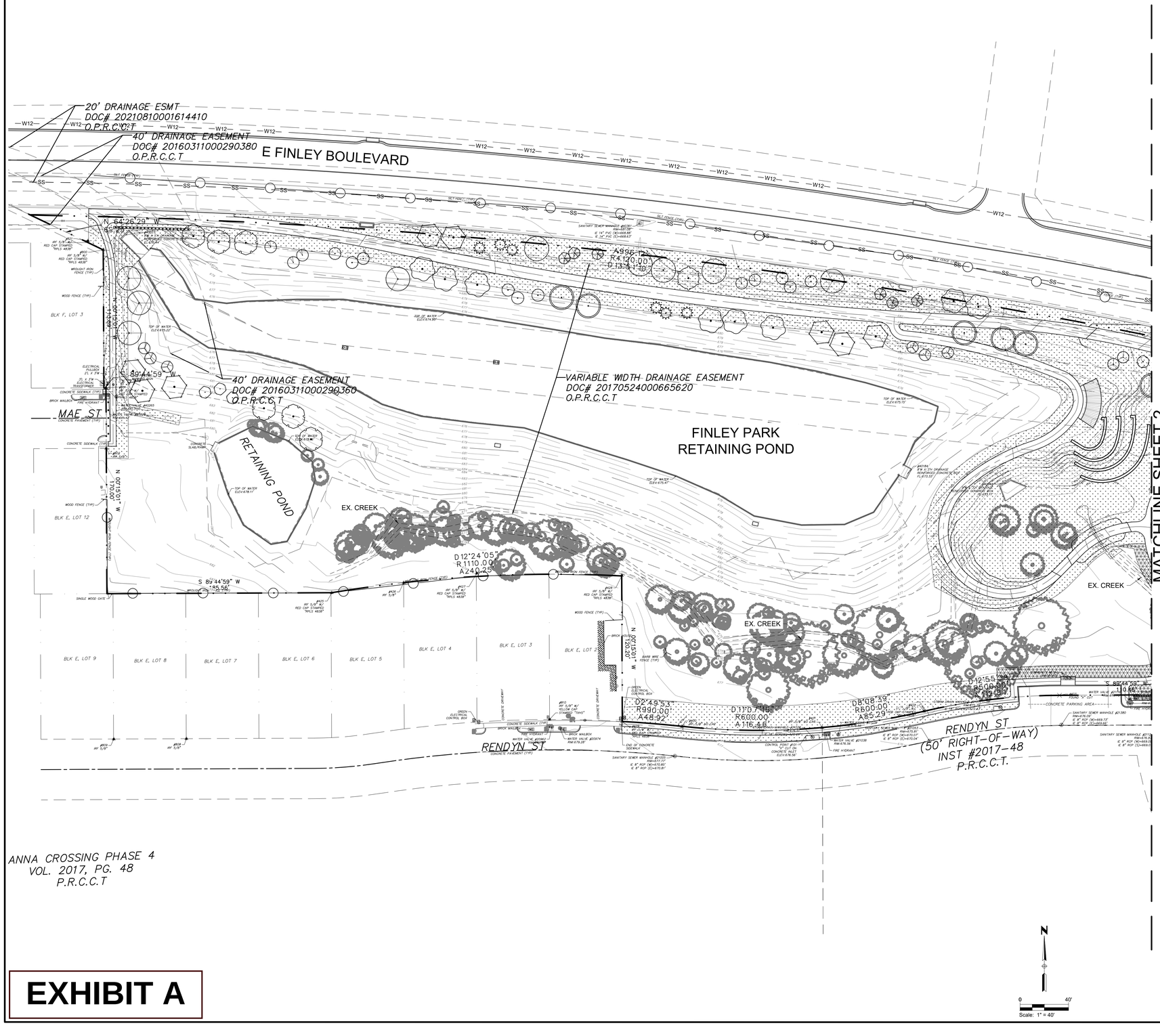

EXHIBIT A

Site Data Summary Table

Item	Total for All Lots
General Site Data	
Zoning (from zoning map)	PD-R
Land Use (from Zoning Ordinance)	E4
Lot Area (square feet & acres)	1,235,361.60 sf / 28.36 ac
Building Footprint Area (square feet)	392 sf
Total Building Area (square feet)	560 sf
Building Height (# stories)	1
Building Height (feet – distance to tallest building element)	14' - 8 3/4"
Lot Coverage (percent – x.xx%)	
Parking	
Parking Ratio (from Zoning Ordinance)	4/acre
Required Parking (# spaces)	114
Total Provided Parking (# spaces)	25
Accessible Parking Required (# spaces)	7
Accessible Parking Provided (# spaces)	2

Water Meter Schedule

Meter Number	Meter Type	Existing or Proposed	Size	Quantity	Symbol
#1	Irrigation	Proposed	2"	1	M1
#2	Irrigation	Proposed	2"	1	M2

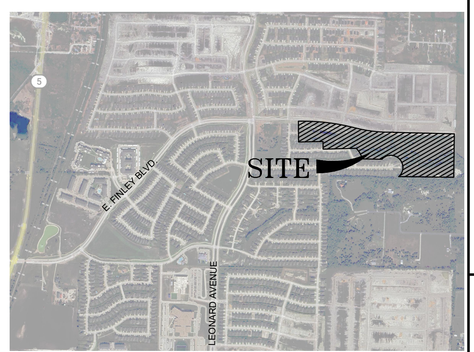

VICINITY MAP

N.T.S.

HUITT ZOLLARS
5430 LBJ Freeway, Suite 1500, Dallas, Texas 75240-2675
Phone (214) 871 - 3311 Fax (214) 871 - 0757

REGISTERED LANDSCAPE ARCHITECT
JOHN C. SCOTT
1976
STATE OF TEXAS

08/11/2026

Huitt-Zollars, Inc. - Firm Registration No. F-761

CONSTRUCTION PLANS FOR

FINLEY PARK

CITY OF ANNA, TEXAS

MARK	MM/DD/YY	DESCRIPTION
	07/28/2026	SITE PLAN SUBMITTAL

PROJECT NUMBER: R316348.01

DRAWN BY: HZI

CHECKED BY: JCS

PLOT DATE: 8/11/26

OWNER:
CITY OF ANNA, TEXAS
PROJECT MANAGER: DALAN WALKER
P.O. BOX 776
120 W. 7TH ST.
ANNA, TX 75409
PHONE 214 - 831- 5306

SITE PLAN

ANNA TOWN SQUARE

BLOCK A, LOT 1

GROSS ACREAGE: 28.36 AC
CITY OF ANNA, COLLIN COUNTY, TEXAS
SURVEY: GRANDERSON STARK AND ABSTRACT: 798

07/28/2026

CAD FILE PATH:h:\proj\r316348.01 - anna crossing park design\10 cadd & bim\10.1 autocad\sheets\site plan subm.dwg

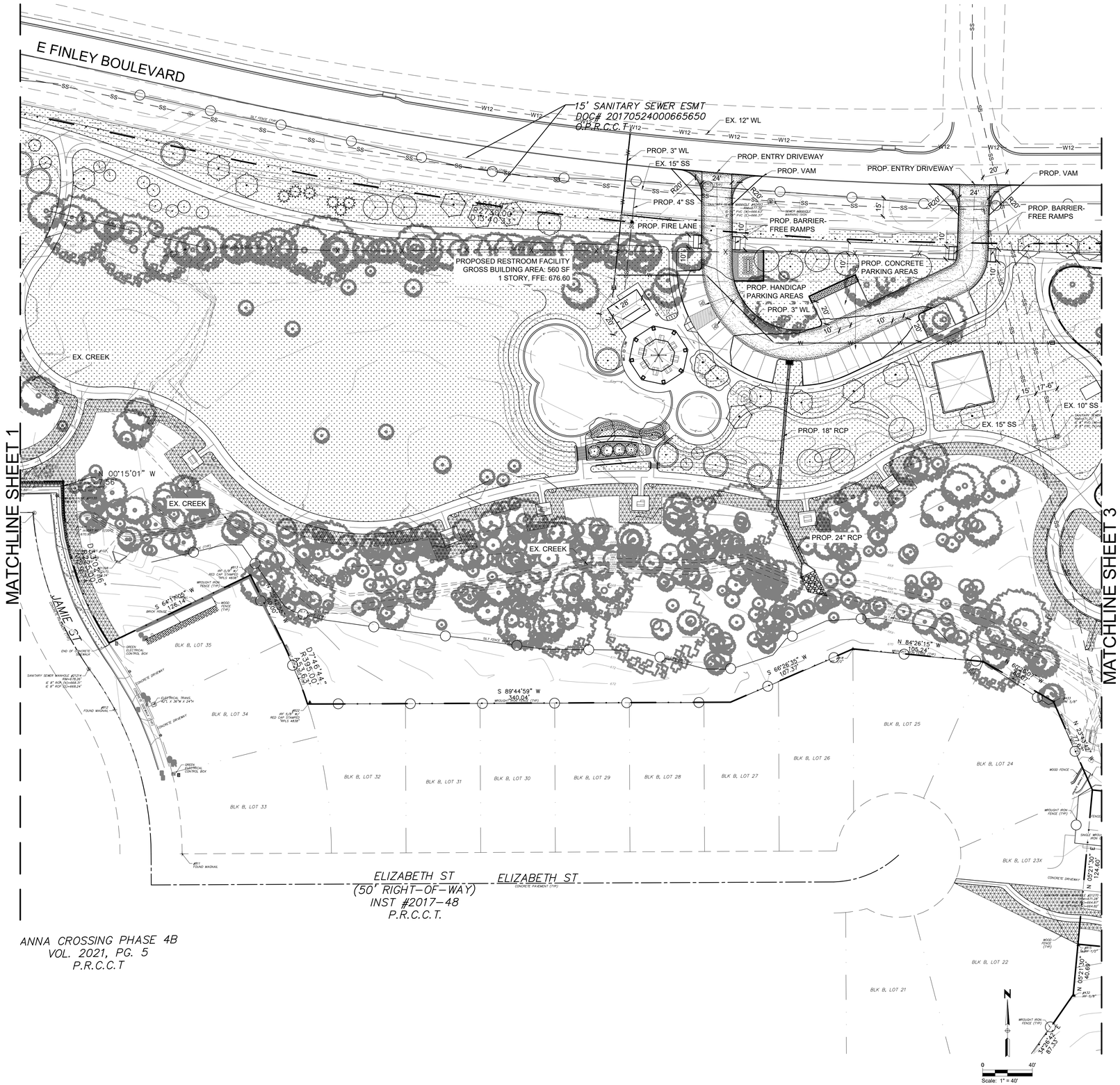

Site Data Summary Table

Item	*Total for All Lots*
General Site Data	
Zoning (from zoning map)	PD-R
Land Use (from Zoning Ordinance)	E4
Lot Area (square feet & acres)	1,235,361.60 sf / 28.36 ac
Building Footprint Area (square feet)	392 sf
Total Building Area (square feet)	560 sf
Building Height (# stories)	1
Building Height (feet – distance to tallest building element)	14' - 8 3/4"
Lot Coverage (percent – x.xx%)	
Parking	
Parking Ratio (from Zoning Ordinance)	4/acre
Required Parking (# spaces)	114
Total Provided Parking (# spaces)	25
Accessible Parking Required (# spaces)	7
Accessible Parking Provided (# spaces)	2

Water Meter Schedule

Meter Number	*Meter Type*	*Existing or Proposed*	*Size*	*Quantity*	*Symbol*
#1	Irrigation	Proposed	2"	1	M1
#2	Irrigation	Proposed	2"	1	M2

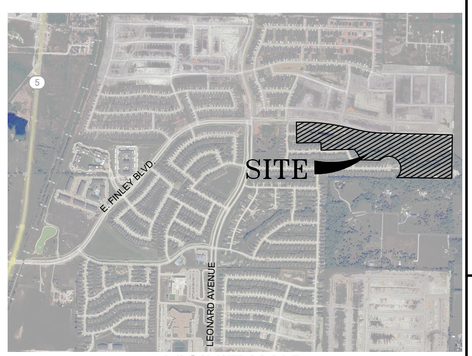

VICINITY MAP

N.T.S.

HUITT ZOLLARS
5430 LBJ Freeway, Suite 1500, Dallas, Texas 75240-2675
Phone (214) 871 - 3311 Fax (214) 871 - 0757

REGISTERED LANDSCAPE ARCHITECT
JOHN C. SCOTT
1976
STATE OF TEXAS

08/11/2026

Huitt-Zollars, Inc. - Firm Registration No. F-761

CONSTRUCTION PLANS FOR

FINLEY PARK

CITY OF ANNA, TEXAS

MARK	MM/DD/YY	DESCRIPTION
	07/28/2026	SITE PLAN SUBMITTAL

PROJECT NUMBER: R316348.01

DRAWN BY: HZI

CHECKED BY: JCS

PLOT DATE: 8/11/26

OWNER:
CITY OF ANNA, TEXAS
PROJECT MANAGER: DALAN WALKER
P.O. BOX 776
120 W. 7TH ST.
ANNA, TX 75409
PHONE 214 - 831- 5306

SITE PLAN

ANNA TOWN SQUARE
BLOCK A, LOT 1

GROSS ACREAGE: 28.36 AC
CITY OF ANNA, COLLIN COUNTY, TEXAS
SURVEY: GRANDERSON STARK AND ABSTRACT: 798

07/28/2026

CAD FILE PATH: h:\proj\r316348.01 - anna crossing park design\10 cad\ & bim\10.1 autocad\sheets\site plan sdsm.dwg

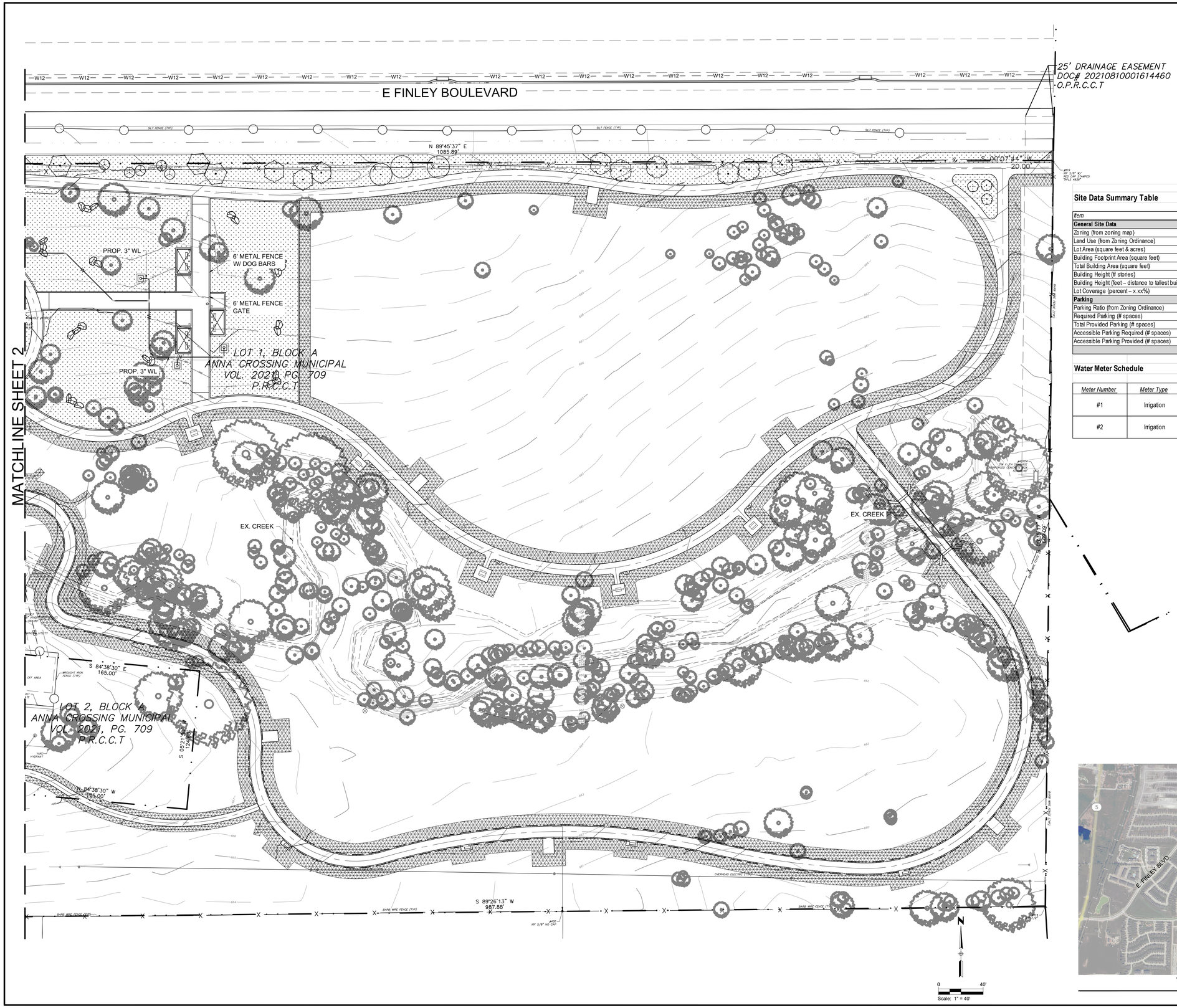

Site Data Summary Table

Item	Total for All Lots
General Site Data	
Zoning (from zoning map)	PD-R
Land Use (from Zoning Ordinance)	E4
Lot Area (square feet & acres)	1,235,361.60 sf / 28.36 ac
Building Footprint Area (square feet)	392 sf
Total Building Area (square feet)	560 sf
Building Height (# stories)	1
Building Height (feet – distance to tallest building element)	14' - 8 3/4"
Lot Coverage (percent – x.xx%)	
Parking	
Parking Ratio (from Zoning Ordinance)	4/acre
Required Parking (# spaces)	114
Total Provided Parking (# spaces)	25
Accessible Parking Required (# spaces)	7
Accessible Parking Provided (# spaces)	2

Water Meter Schedule

Meter Number	Meter Type	Existing or Proposed	Size	Quantity	Symbol
#1	Irrigation	Proposed	2"	1	M1
#2	Irrigation	Proposed	2"	1	M2

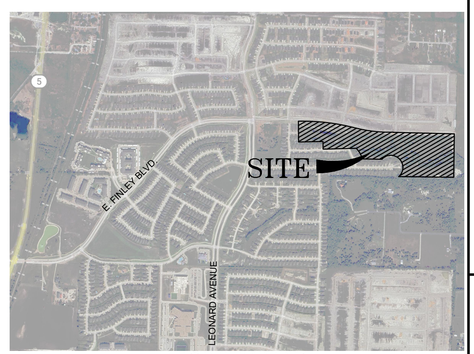

VICINITY MAP

N.T.S.

HUITT ZOLLARS
5430 LBJ Freeway, Suite 1500, Dallas, Texas 75240-2675
Phone (214) 871 - 3311 Fax (214) 871 - 0757

REGISTERED LANDSCAPE ARCHITECT
JOHN C. SCOTT
1976
STATE OF TEXAS

08/11/2026

Huitt-Zollars, Inc. - Firm Registration No. F-761

CONSTRUCTION PLANS FOR

FINLEY PARK

CITY OF ANNA, TEXAS

MARK	MM/DD/YY	DESCRIPTION
	07/28/2026	SITE PLAN SUBMITTAL

PROJECT NUMBER: R316348.01

DRAWN BY: HZI

CHECKED BY: JCS

PLOT DATE: 8/11/26

OWNER:
CITY OF ANNA, TEXAS
PROJECT MANAGER: DALAN WALKER
P.O. BOX 776
120 W. 7TH ST.
ANNA, TX 75409
PHONE 214 - 831- 5306

SITE PLAN

ANNA TOWN SQUARE

BLOCK A, LOT 1

GROSS ACREAGE: 28.36 AC
CITY OF ANNA, COLLIN COUNTY, TEXAS
SURVEY: GRANDERSON STARK AND ABSTRACT: 798

07/28/2026

CAD FILE PATH:h:\proj\r316348.01 - anna crossing park design\10 cadd & bim\10.1 autocad\sheets\site plan subm.dwg

Item No. 5.h.

Planning & Zoning Commission Agenda
Staff Report

Meeting Date: 9/9/2026
Staff Contact: Nyssa Galatas

AGENDA ITEM:
Approve Sherley Avenue Addition, Block A, Lot 1, Site Plan (SP 26-0019)

SUMMARY:
A private civic center on 1.3± acres at the northeast corner of E. Fourth Street and N. Sherley Avenue.

Recommended for approval subject to approval of drainage and detention plans by Public Works.

BACKGROUND:

Date Submitted	8/19/2026	**Jurisdiction**	City of Anna
Owner	Sherley Brothers		
Representative/Applicant	Sherley Brothers		
Requested Action	Approval of the Site Plan		
Purpose	To build a private civic center		
Land Area	1.3± acres		
Location	The northeast corner of E. Fourth Street and N. Sherley Avenue		
Comp Plan Designation	Downtown		
Existing Zoning	Downtown (DT)		

Surrounding Properties

	Land Use	**Zoning**	**Comp Plan Designation**
North	Single-Family Residential	Single-Family Residential (SF-1)	Downtown
East	Single-Family Residential	Single-Family Residential (SF-1)	Downtown
South	Park	Central Business Redevelopment District	Downtown

West	Commercial	Local Commercial (C-1)	Downtown

ATTACHMENTS:

1. Locator Map - Sherley Avenue Addition, Block A, Lot 1, Site Plan (SP 26-0019)
2. Exhibit A - Sherley Avenue Addition, Block A, Lot 1, Site Plan (SP 26-0019)

Sherley Avenue Addition, Block A, Lot 1, Site Plan (SP 26-0019)

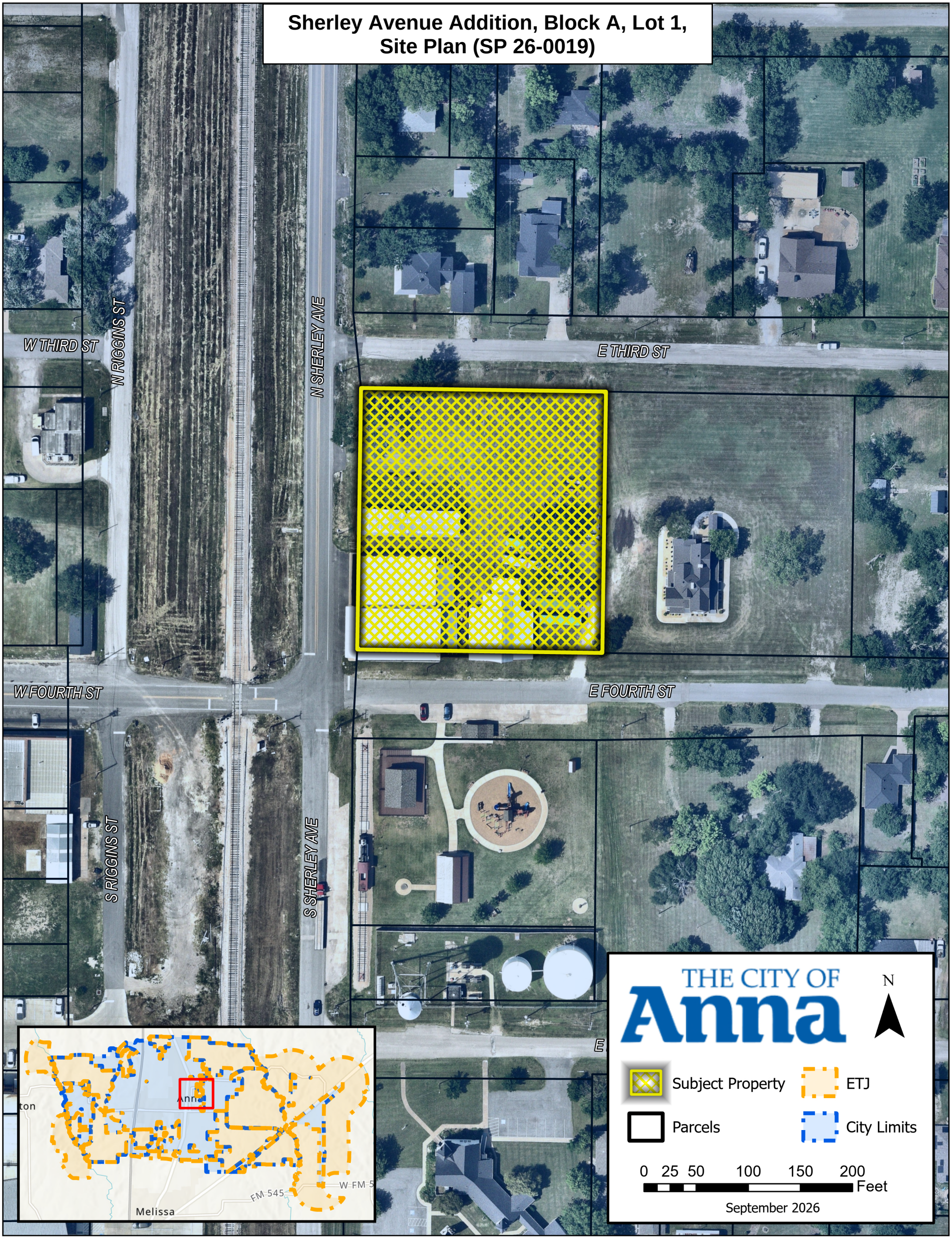

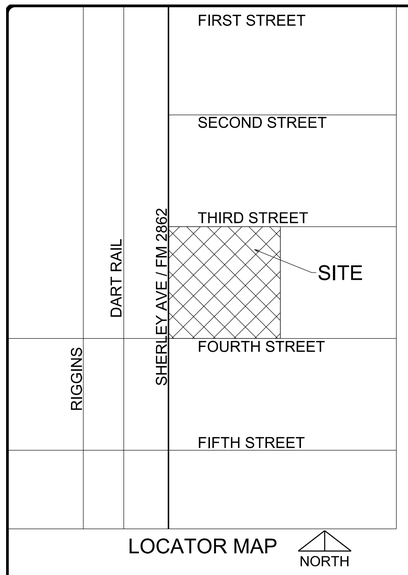

LOCATOR MAP NORTH

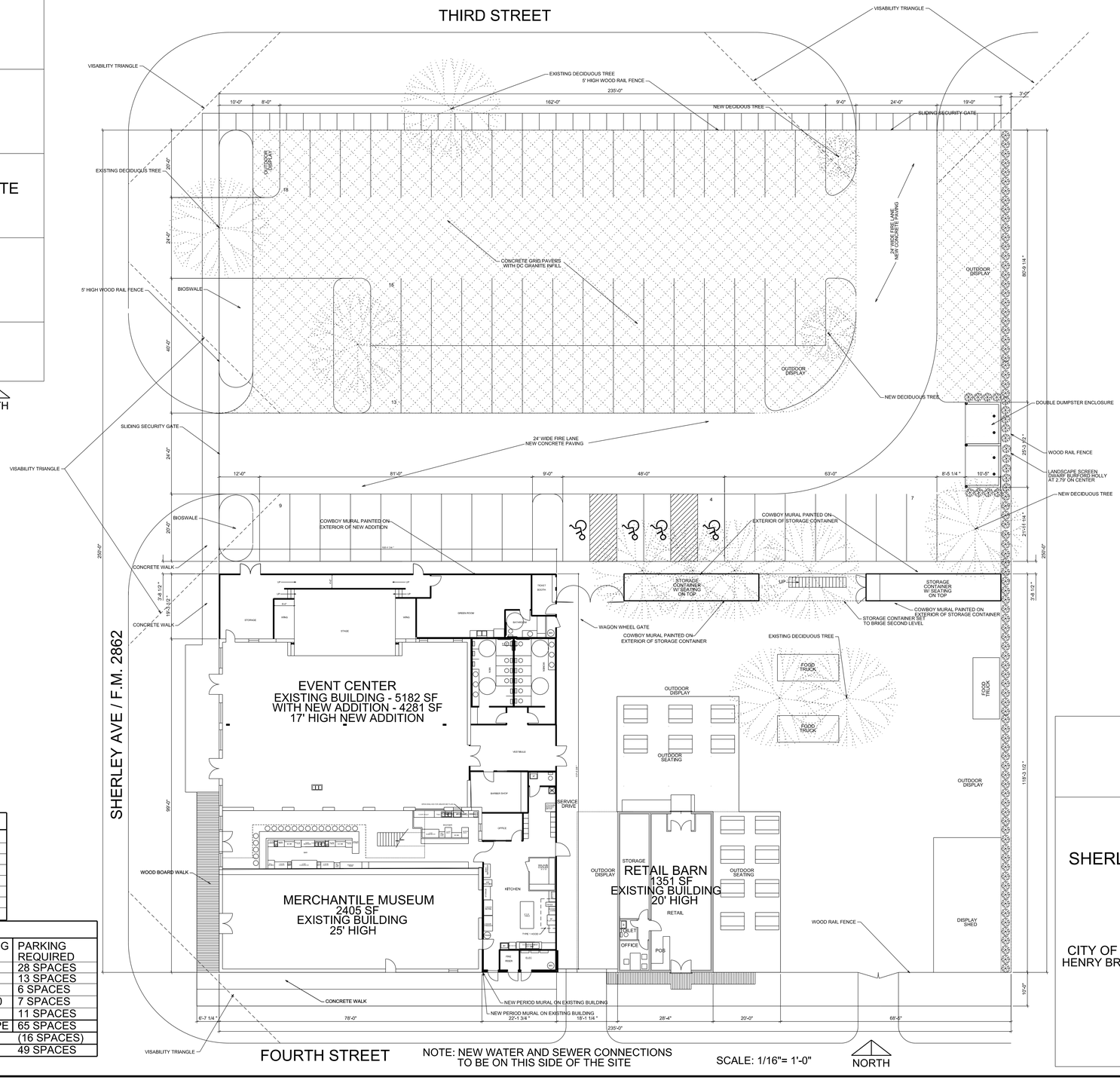

NOTE: NEW WATER AND SEWER CONNECTIONS TO BE ON THIS SIDE OF THE SITE

SCALE: 1/16"= 1'-0"

NORTH

SITE TABULATION TABLE	
PROPERTY SQ. FT.	58,750 SQ. FT.
PARKING REQUIRED	49 SPACES
PARKING PROVIDED	66 SPACES
CURRENT ZONING	DOWNTOWN
EXISTING HARD SURFACE	9,906 SQ. FT.
HARD SURFACE AREA	29,557 SQ. FT.
LANDSCAPED AREA	29,193 SQ. FT.
FLOOR TO AREA RATIO	0.26

BUILDING UNIT TABLE			
UNIT TYPE	BUILDING AREA	PARKING RATIO	PARKING REQUIRED
CIVIC CENTER	6,871	4/1000	28 SPACES
BAR	2,527	5/1000	13 SPACES
RETAIL	1,351	4/1000	6 SPACES
MUSEUM	2,406	2.5/1000	7 SPACES
OUTDOOR DINING	2,192	1/200	11 SPACES
TOTAL PARKING REQUIRED PER ZONING TYPE			65 SPACES
LESS 25% PER DOWNTOWN ZONING			(16 SPACES)
TOTAL PARKING REQUIRED			49 SPACES

CITY APPROVAL

SITE PLAN
SP 26-0019

SHERLEY AVENUE ADDITION
BLOCK A, LOT 1

1.349 ACRES
CITY OF ANNA, COLLIN COUNTY, TEXAS
HENRY BRANTLEY SURVEY, ABSTRACT NO 71

AUGUST 21, 2026

ARCHITECT
KENT HUGHLETT, ARCHITECT PLLC
177 TIMBERBROOK CIRCLE
DENISON, TEXAS 75021
RKHUGHLETT@GMAIL.COM 972-743-8398

OWNERS
MARQUIN J. HUHN & MENDEL G. KUNKLE
P.O. BOX 637
ANNA, TEXAS 75409
903-327-2631

EVENT CENTER
118 N. SHERLEY AVE
ANNA, TEXAS

A-1.0

AUG. 21, 2026

EXHIBIT A

Item No. 6.a.

Planning & Zoning Commission Agenda
Staff Report

Meeting Date: 9/9/2026
Staff Contact: Lauren Mecke

AGENDA ITEM:
Continue a Public Hearing on a recommendation regarding an Ordinance amending the Sherley Farms Planned Development Zoning (Ord. No. 1137-2025-02)

SUMMARY:
Tellus and city staff have worked together to provide clarification of the Building Articulation standards that will allow a broad range of homebuilders into the Sherley Farms development and provide clarification of the timing for the amenities delivery that conflicted with the Development Agreement.

The previously approved Ordinance (Ord. No. 1137-2025-02) did not include the written development standards as provided in the Development Agreement (Res. No. 2024-12-1716). For ease of use, staff is proposing to provide the development standards from the Development Agreement with the modifications. **Option 1** contains the requested modifications as presented to the Planning & Zoning Commission on August 3, 2026. **Option 2** contains the developer's modified request.

BACKGROUND:

Date Submitted	6/8/2026	**Jurisdiction**	City of Anna
Owner	Tellus Texas III LLC & Sherley Partners LTD		
Representative/Applicant	Justin Craig		
Requested Action	Approve an amendment to the Planned Development		
Purpose	Provide clarification of building articulation, amenity timing, and fence requirements		
Land Area	1,127.6± acres		
Location	North and south sides of E. Rosamond Parkway (F.M. 2862), 980± feet east of N. Leonard Avenue (CR 425)		
Public Notice	7/23/2026		
Surrounding Properties			
	Land Use	**Zoning**	**Comp Plan Designation**
North	Single Family Rural Residential/	Agricultural, Single-Family Residential – Large	Rural Living

	Vacant Land	Lot/Extraterritorial Jurisdiction (ETJ)/Two-Family (TF)/Single-Family Residential-7.2	
East	Ranching and Agriculture/ Vacant Land	Extraterritorial Jurisdiction (ETJ)	Rural Living
South	Single Family Rural Residential/Vacant Land	Planned Development, Single-Family Residential – Large Lot (SF-E)/Planned Development/Extraterritorial Jurisdiction (ETJ)	Suburban Living
West	Ranching and Agriculture/Cluster Residential/Park and School	Extraterritorial Jurisdiction (ETJ)/Agriculture (AG)/Single- Family Residential – Large Lot (SF-E)	Rural Living

This request does not change the land uses within the Planned Development but rather provides clearer information for staff, the developer, property owners (present & future), and homebuilders as it relates to the timing of the amenity center construction, building materials and articulation, and fence requirements.

The existing Sherley Farms Planned Development Zoning (Ord. No. 1137-2025-02) did not include the written development standards provided within the Development Agreement (Res. No. 2024-12-1716). This amendment will include the entire text for ease of access. The Ordinance and Development Agreement are attached for reference. The attached Option 1 and Option 2 documents provide a redline of the changes with staff commentary.

Amenity Completion Timeframe

Staff and Tellus had been working on the amenity center site when a conflict within the Development Agreement was brought forward relating to the timing of completion. The Developer is committing to a stricter timeframe.

Masonry & Building Articulation

Staff and the Tellus Group began answering questions from homebuilders about the masonry requirements. To provide a variety in the look and building articulation with developments, the proposed changes in Option 1 allow cementitious fiberboard as an acceptable masonry product. After the August 3, 2026 Planning & Zoning Commission meeting (**Option 1**), Tellus has modified their request to keep the cementitous fiber board standards in place but remove the porch requirement (**Option 2**). Additional modifications to the section include increasing the minimum porch size to count as an articulation and general cleanup of the text.

Fence Requirements

Tellus has provided a modification to the fence requirements which addresses a question staff commonly receive with regard to reverse corner lots and key lots. When a subdivision is platted with a reverse corner lot whose rear yard abuts the side yard of another lot (the key lot), see image below, it could negatively impact the key lot owner.

If we were to allow the fence of the reverse corner lot to be constructed on the property line, it would create a visual barrier for the key lot. Tellus is proposing an alternative fencing requirement that would give homeowners of the reverse corner lot the ability to place the fence on the property line.

Figure 2: Lot Type Diagram

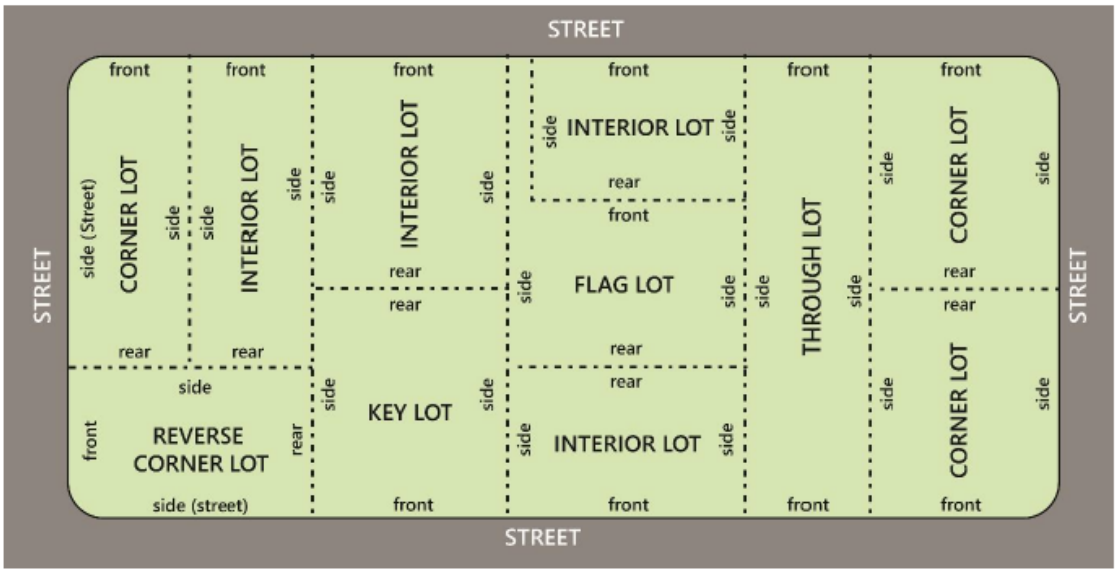

(Source: American Legal Publishing Code Library)

ATTACHMENTS:

1. Map - Sherley Farms (TA 26-0003)
2. Reference (Zoning) - Sherley Farms (TA 26-0003)
3. Reference (Dev Agreement) - Sherley Farms (TA 26-0003)
4. Option 1 - Summary of amendments (Aug 3)
5. Option 2 - Summary of modified requested amendments (Sep 9)
6. Elevations from 2024-10-22 Sherley Farms - Anna Council Workshop Presentation
7. Example of Oliva Clarke - Carmichael
8. Example of Oliva Clarke - Logan

Sherley Farms Planned Development

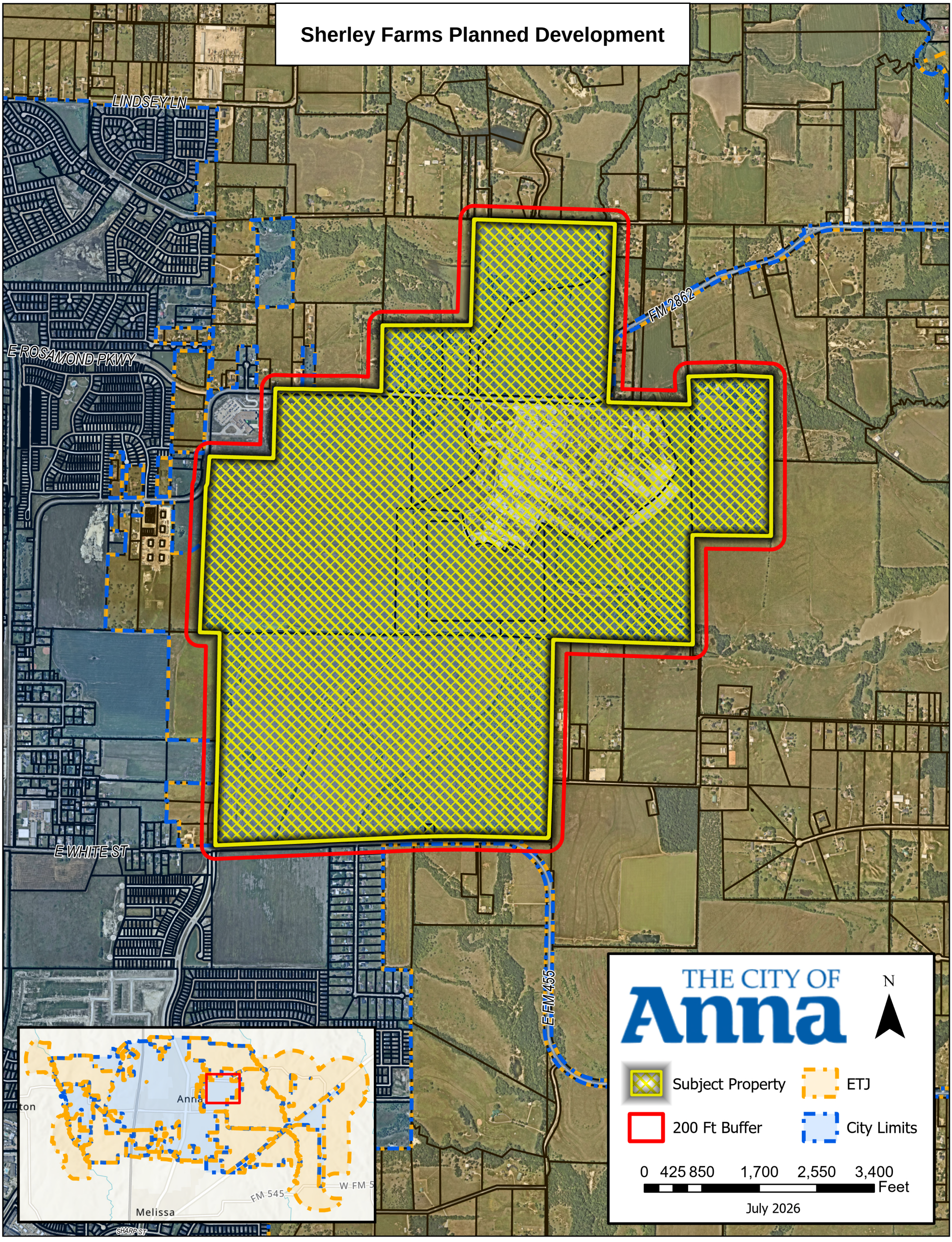

CITY OF ANNA, TEXAS
(Property rezoned under this ordinance is generally located on the north and south sides of E. Rosamond Parkway (F.M. 2862), 980± feet east of N. Leonard Avenue (CR 425))

ORDINANCE NO. 1137-2025-02

AN ORDINANCE OF THE CITY OF ANNA, TEXAS AMENDING THE CITY'S COMPREHENSIVE PLAN, ZONING MAP, AND ZONING ORDINANCE AND CHANGING THE ZONING OF CERTAIN PROPERTY AS DESCRIBED HEREIN; PROVIDING FOR SAVINGS, REPEALING AND SEVERABILITY CLAUSES; PROVIDING FOR AN EFFECTIVE DATE; PROVIDING FOR A PENALTY CLAUSE NOT TO EXCEED $2,000 OR THE HIGHEST PENALTY AMOUNT ALLOWED BY LAW, WHICHEVER IS LESS; AND, PROVIDING FOR THE PUBLICATION OF THE CAPTION HEREOF.

WHEREAS, the City of Anna, Texas ("City") has previously adopted ordinances, rules and regulations governing the zoning in the City; and

WHEREAS, the City Council received an annexation petition and requested to establish zoning on Property described in Exhibit A ("Property") and depicted in Exhibit B ("Illustrative Plan") attached hereto and incorporated herein for all purposes as if set forth in full; and

WHEREAS, said Property generally located on the north and south sides of E. Rosamond Parkway (F.M. 2862), 980± feet east of N. Leonard Avenue (CR 425), is being zoned to Planned Development/Agricultural (AG)/Mixed Use (MU)/Industrial-1 (I-1) (PD/AG/MU/I-1); and

WHEREAS, the Planning and Zoning Commission of the City and the City Council of the City of Anna ("City Council") have given the requisite notices by publication and otherwise and have held the public hearings as required by law and afforded a full and fair hearing to all property owners and generally to all persons interested in and situated in the affected area and in the vicinity thereof, the City Council has concluded that the Zoning Ordinance of the City should be amended as set forth below.

NOW, THEREFORE, BE IT ORDAINED BY THE CITY COUNCIL OF THE CITY OF ANNA, TEXAS THAT:

Section 1. **Recitals Incorporated**

The above recitals are incorporated herein by reference for all purposes.

Section 2. **Zoning Change**

The Anna City Code of Ordinances are hereby amended by establishing the zoning of the Property described in Exhibit A and depicted in Exhibit B to Planned Development/Agricultural (AG)/Mixed Use (MU)/Industrial-1 (I-1) (PD/AG/MU/I-1) with the additional restrictions as follows:

1. Site Shall develop in accordance with the Preliminary Site Plan shown in Exhibit B.

Section 3. **Official Zoning Map**

The official Zoning Map of the City shall be corrected to reflect the change in zoning described herein.

Section 4. **Savings, Repealing and Severability Clauses**

It is hereby declared to be the intention of the City Council that the words, sentences, paragraphs, subdivisions, clauses, phrases, and provisions of this ordinance are severable and, if any phrase, sentence, paragraph, subdivision, clause, or provision of this ordinance shall be declared unconstitutional or otherwise invalid or inapplicable by the valid judgment or decree of any court of competent jurisdiction, such unconstitutionality, invalidity or inapplicability shall not affect any of the remaining words, sentences, paragraphs, subdivisions, clauses, phrases, or provisions of this ordinance, since the same would have been enacted by the City Council without the incorporation in this ordinance of any such unconstitutional, invalid or inapplicable words, sentences, paragraphs, subdivisions, clauses, phrases, or provisions. Further, all ordinances or parts of ordinances in force when the provisions of this ordinance become effective that are consistent and do not conflict with the terms and provisions of this ordinance are hereby ratified to the extent of such consistency and lack of conflict, and all ordinances or parts of ordinances in force when the provisions of this ordinance become effective that are inconsistent or in conflict with the terms and provisions contained in this ordinance are hereby repealed only to the extent of any such conflict.

Section 5. **Penalty**

Any violation of any of the terms of this ordinance, whether denominated in this ordinance as unlawful or not, shall be deemed a misdemeanor. Any person convicted of any such violation shall be fined in an amount not to exceed $2,000 for each incidence of violation. Each day a violation exists is considered a separate offense and will be punished separately.

Section 6. **Publication of the Caption and Effective Date**

This ordinance shall be effective upon its passage by the City Council, approval by the Mayor, and posting and/or publication, if required by law, of its caption. The City Secretary is hereby authorized and directed to implement such posting and/or publication.

PASSED by the City Council of the City of Anna, Texas this 25th day of February 2025.

ATTESTED: APPROVED:

Carrie L. Land, City Secretary

THE CITY OF Anna TEXAS 1913

Pete Cain, Mayor

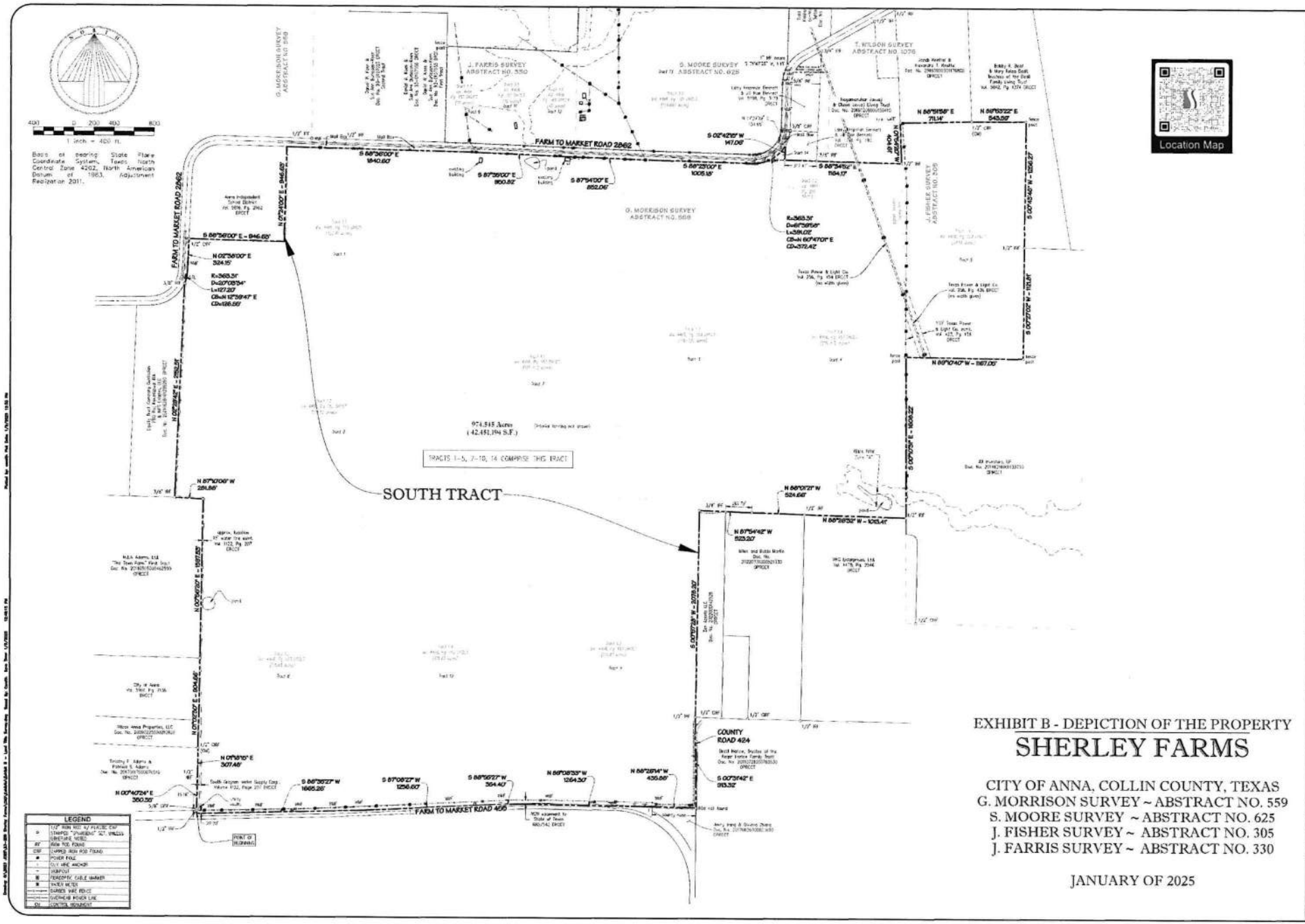

EXHIBIT B - DEPICTION OF THE PROPERTY

SHERLEY FARMS

CITY OF ANNA, COLLIN COUNTY, TEXAS
G. MORRISON SURVEY ~ ABSTRACT NO. 559
S. MOORE SURVEY ~ ABSTRACT NO. 625
J. FISHER SURVEY ~ ABSTRACT NO. 305
J. FARRIS SURVEY ~ ABSTRACT NO. 330

JANUARY OF 2025

SPIARS ENGINEERING & SURVEYING

ALTA/NSPS LAND TITLE SURVEY
CIYT OF ANNA
COLLIN COUNTY, TEXAS
Sherley Farms

Issue Dates: 1/29/24

Revisions	Date
Title objection letter addressed	4/4/24
new commitment issued	4/25/24
boundary revised	10/8/24

Scale: 1" = 400'
Drawn By: ED
Checked By: DKB
Sheet 1 of 3
JOB # 23-288

METES AND BOUNDS DESCRIPTION

BEING a tract of land situated in the G. Morrison Survey, Abstract No. 559, the S. Moore Survey, Abstract No. 625, and the J. Fisher Survey, Abstract No. 305, in Collin County, Texas, being part of Tracts 1.1, 1.2, 1.3, 1.4, all of Tract 1.6, recorded in Volume 4466, Page 153, Deed Records, Collin County, Texas (DRCCT), and part of Tracts 1.1, 1.2, 1.3, and 1.4, recorded in Volume 4466, Page 163 DRCCT, and all of Tract 1.2, recorded in Volume 4466, Page 201 DRCCT, with the subject tract being more particularly described as follows:

BEGINNING at a point in Farm to Market Road 455, a variable width public right-of-way, being the recognized southwest corner of a right-of-way easement to the State of Texas, recorded in Volume 685, Page 543 DRCCT, from which a 1/2" iron rod found for the southeast corner of a tract conveyed to Timothy P. Adams and Patricia S. Adams, recorded in Document No. 20170117000070510, Official Public Records, Collin County, Texas (OPRCCT), bears N 00°40'24" E, 29.20 feet;

THENCE N 00°40'24" E, through said right-of-way, passing at 29.20 feet said 1/2" iron rod found, and continuing along the east line of said Adams tract, passing at 19.10 feet a 5/8" iron rod with plastic cap found for witness, continuing a total distance of 350.35 feet to a 1/2" iron rod found;

THENCE N 01°18'15" E, 307.48 feet continuing along the east line thereof to a 1/2" iron rod with plastic cap found for the southeast corner of a tract conveyed to Tilbox Anna Properties, LLC, recorded in Document No. 20090225000210920 OPRCCT;

THENCE N 01°02'30" E, 904.66 feet along the east line thereof, and of an east line of a tract conveyed to City of Anna recorded in Volume 5961, Page 7136 DRCCT, to a 1/2" iron rod with plastic cap stamped "SPIARSENG" set for the southeast corner of "The Tosh Farm" First Tract, conveyed to MJLA Adams, Ltd., recorded in Document No. 20110505000462590 OPRCCT;

THENCE N 00°56'20" E, 1597.53 feet along the east line of said MJLA Adams tract to a 1/2" iron rod with plastic cap stamped "SPIARSENG" set for the northeast corner thereof;

THENCE N 87°10'06" W, 281.88 feet along the north line of said MJLA Adams tract to a 3/8" iron rod found for the southeast corner of a tract conveyed to Equity Trust Company Custodian FBO Raj Kakarlapudi IRA and NKS Estates, LLC, recorded in Document No. 20210628001299290 OPRCCT;

THENCE N 02°29'42" E, 2152.51 feet along the east line thereof to a 3/8" iron rod found on the east line of Farm to Market Road 2862, a 90-foot-wide public right-of-way;

THENCE along the east line thereof, around a non-tangent curve to the left having a central angle of 20°03'34", a radius of 363.31 feet, a chord of N 12°39'47" E - 126.55 feet, an arc length of 127.20 feet;

THENCE N 02°38'00" E, 324.15 feet continuing along the east line of said right-of-way to a 1/2" iron rod with plastic cap found for the southwest corner of a tract conveyed to Anna Independent School District, recorded in Volume 5816, Page 2962 DRCCT;

THENCE S 88°36'00" E, 946.63 feet along the south line thereof;

THENCE N 01°24'00" E, 946.63 feet along the east line of said Anna ISD tract to the intersection thereof with the south line of Farm to Market Road 2862;

THENCE along the south line thereof, the following:

S 88°36'00" E, 1840.60 feet;

S 87°35'00" E, 950.82 feet;

S 87°54'00" E, 852.06 feet;

S 88°23'00" E, 1005.18 feet;

And a tangent curve to the left having a central angle of 61°39'58", a radius of 363.31 feet, a chord of N 60°47'01" E - 372.42 feet, an arc length of 391.02 feet to a 1/2" iron rod with plastic cap stamped "SPIARSENG" set for a westerly corner of a tract conveyed to Larry Kropman Bennett and Jill Rae Bennett, recorded in Volume 1718, Page 193 DRCCT, and from which a 5/8" iron rod with plastic cap found bears N 17°37'19" E, 154.65 feet (a chord bearing and distance);

THENCE S 02°42'15" W, 147.06 feet along the west line of said Bennett tract to a 1/2" iron rod with plastic cap stamped "SPIARSENG" set;

THENCE S 88°34'52" E, along the south line of said Bennett tract, passing at 317.47 feet a 3/8" iron rod found for the southwest corner of a tract conveyed to the Ragamanohar Javvaji and Chaya Javvaji Living Trust, recorded in Document No. 20160209000150410 OPRCCT, continuing a total distance of 1184.17 feet to a 1/2" iron rod found for the southeast corner thereof;

THENCE N 01°54'20" W, 404.61 feet along the east line thereof to a 1/2" iron rod with plastic cap found for the southwest corner of a tract conveyed to Jacob Knettel and Alexandra T. Knettel, recorded in Document No. 20160602001176800 OPRCCT;

THENCE N 88°51'58" E, 711.14 feet along the south line thereof to a 1/2" iron rod with plastic cap found for the upper southwest corner of a tract conveyed to Bobby R. Beall and Mary Relea Beall, Trustees of the Beall Family Living Trust, recorded in Volume 5842, Page 1374 DRCCT;

THENCE N 89°53'22" E, 543.59 feet along the upper south line thereof to a fence post found;

THENCE S 00°43'46" W, 1256.27 feet along a westerly line of said Beall tract to a 1/2" iron rod found for a northwesterly corner of a tract conveyed to JDI Investors, LP, recorded in Document No. 20141016001133750 OPRCCT;

THENCE S 00°27'02" W, 1121.81 feet, generally along a fence and along a westerly line of said JDI tract to a fence post found;

THENCE N 89°10'40" W, 1167.05 feet, generally along a fence and along a southerly line of said JDI tract to a fence post found;

THENCE S 00°10'31" E, 1608.22 feet, generally along a fence and along a westerly line of said JDI tract to a 1/2" iron rod found for the northeast corner of a tract conveyed to WKC Enterprises, Ltd., recorded in Volume 4478, Page 2546 DRCCT;

THENCE N 88°26'32" W, 1013.41 feet along the north line thereof to a 1/2" iron rod found for the northeast corner of a tract conveyed to Miles and Bobbi Martin, recorded in Document No. 20220331000521330 OPRCCT;

THENCE N 88°01'21" W, 524.66 feet along the north line thereof to a 1/2" iron rod with plastic cap stamped "SPIARSENG" set;

THENCE N 87°54'42" W, continuing along the north line of said Martin tract, passing at 261.79 feet a 3/4" iron pipe found for the northeast corner of a tract conveyed to Zen Assets LLC, recorded in Document No. 20220303142528 OPRCCT, and continuing along the north line thereof a total distance of 523.20 feet to a 1/2" iron rod with plastic cap stamped "SPIARSENG" set;

THENCE S 00°57'28" W, 2078.20 feet along the west line thereof to a 1/2" iron rod found for the southwest corner of said Zen Assets tract, being a bend point in County Road 424, a public road;

THENCE S 00°31'42" E, 913.32 feet along said road to a mag nail found for a bend point thereof;

THENCE N 88°26'14" W, 435.88 feet continuing along said road to a point for the intersection of County Road 424 with the north line of Farm to Market Road 455, being the southeast corner of said right-of-way easement;

THENCE into and through said right-of-way, along the south line of said easement, the following:

N 89°08'33" W, 1264.30 feet;

S 88°55'27" W, 354.40 feet;

S 87°06'27" W, 1256.60 feet;

And S 88°35'27" W, 1665.26 feet to the POINT OF BEGINNING with the subject tract containing 42,451,194 square feet or 974.545 acres of land.

SURVEY RELATED SCHEDULE "B" - EXCEPTIONS

First American Title Insurance Company, G.F. No. 1002-[illegible] Effective 1-5-2024

10(e)	Easement to Texas Power and Light Company, recorded in Volume 256, Page 454, Real Property Records, Collin County, Texas. **AFFECTS AS SHOWN**
10(f)	Easement to Texas Power and Light Company, recorded in Volume 256, Page 456, Real Property Records, Collin County, Texas. **AFFECTS AS SHOWN**
10(g)	Easement to Texas Power and Light Company, recorded in Volume 256, Page 453, Real Property Records, Collin County, Texas. **DOES NOT AFFECT**
10(h)	Easement to American Telephone and Telegraph Company, recorded in Volume 271, Page 584, Real Property Records, Collin County, Texas. **AFFECTS; BLANKET IN NATURE**
10(i)	Easement to Texas Power and Light Company, recorded in Volume 271, Page 573, Real Property Records, Collin County, Texas. **AFFECTS; BLANKET IN NATURE**
10(j)	Easement to Southwestern Bell Telephone Company, recorded in Volume 383, Page 444, Real Property Records, Collin County, Texas. **AFFECTS; BLANKET IN NATURE**
10(k)	Easement to Southwestern Bell Telephone Company, recorded in Volume 383, Page 443, Real Property Records, Collin County, Texas. **AFFECTS; BLANKET IN NATURE**
10(l)	Easement to Southwestern Bell Telephone Company, recorded in Volume 383, Page 451, Real Property Records, Collin County, Texas. **AFFECTS; BLANKET IN NATURE**
10(m)	Easement to Southwestern Bell Telephone Company, recorded in Volume 383, Page 469, Real Property Records, Collin County, Texas. **AFFECTS; BLANKET IN NATURE**
[illegible]	Easement to Texas Power and Light Company, recorded in Volume 423, Page 556, Real Property Records, Collin County, Texas. **AFFECTS AS SHOWN**
[illegible]	Easement to Collin County Soil Conservation District, recorded in Volume 447, Page 197, Real Property Records, Collin County, Texas. **DOES NOT AFFECT**
[illegible]	Easement to Collin County Soil Conservation District, recorded in Volume 447, Page 220, Real Property Records, Collin County, Texas. **DOES NOT AFFECT**
[illegible]	Easement to Collin County Soil Conservation District, recorded in Volume 558, Page 586, Real Property Records, Collin County, Texas. **DOES NOT AFFECT**
[illegible]	Easement to the City of Anna, recorded in Volume 637, Page 34, Real Property Records, Collin County, Texas. **NO DESCRIPTION THEREIN; UNABLE TO LOCATE**
[illegible]	Easement to Grayson-Collin Electric Cooperative, recorded in Volume 853, Page 151, Real Property Records, Collin County, Texas. **VAGUE, OUTDATED DESCRIPTION; UNABLE TO LOCATE**
[illegible]	Easement to South Grayson Water Supply Corp., recorded in Volume 1032, Page 207, Real Property Records, Collin County, Texas. **AFFECTS AS SHOWN**
[illegible]	Easement to Westminster Special Utility District, recorded in Instrument 20190531000605570, Real Property Records, Collin County, Texas. **AFFECTS; UNABLE TO LOCATE**

EXHIBIT B - DEPICTION OF THE PROPERTY

SHERLEY FARMS

CITY OF ANNA, COLLIN COUNTY, TEXAS
G. MORRISON SURVEY ~ ABSTRACT NO. 559
S. MOORE SURVEY ~ ABSTRACT NO. 625
J. FISHER SURVEY ~ ABSTRACT NO. 305
J. FARRIS SURVEY ~ ABSTRACT NO. 330

JANUARY OF 2025

SPIARS ENGINEERING & SURVEYING
765 Custer Road, Suite 100 • Plano, TX 75075 • 972.422.0077
www.spiarseng.com

website

ALTA/NSPS LAND TITLE SURVEY
CIYT OF ANNA
COLLIN COUNTY, TEXAS
Sherley Farms

Issue Dates: 1/29/24

Revisions	Date
Title objection letter addressed	4/4/24
new commitment issued	4/25/24
boundary revised	10/8/24

Scale:
Drawn By: ED
Checked By: DKB

JOB # 23-288

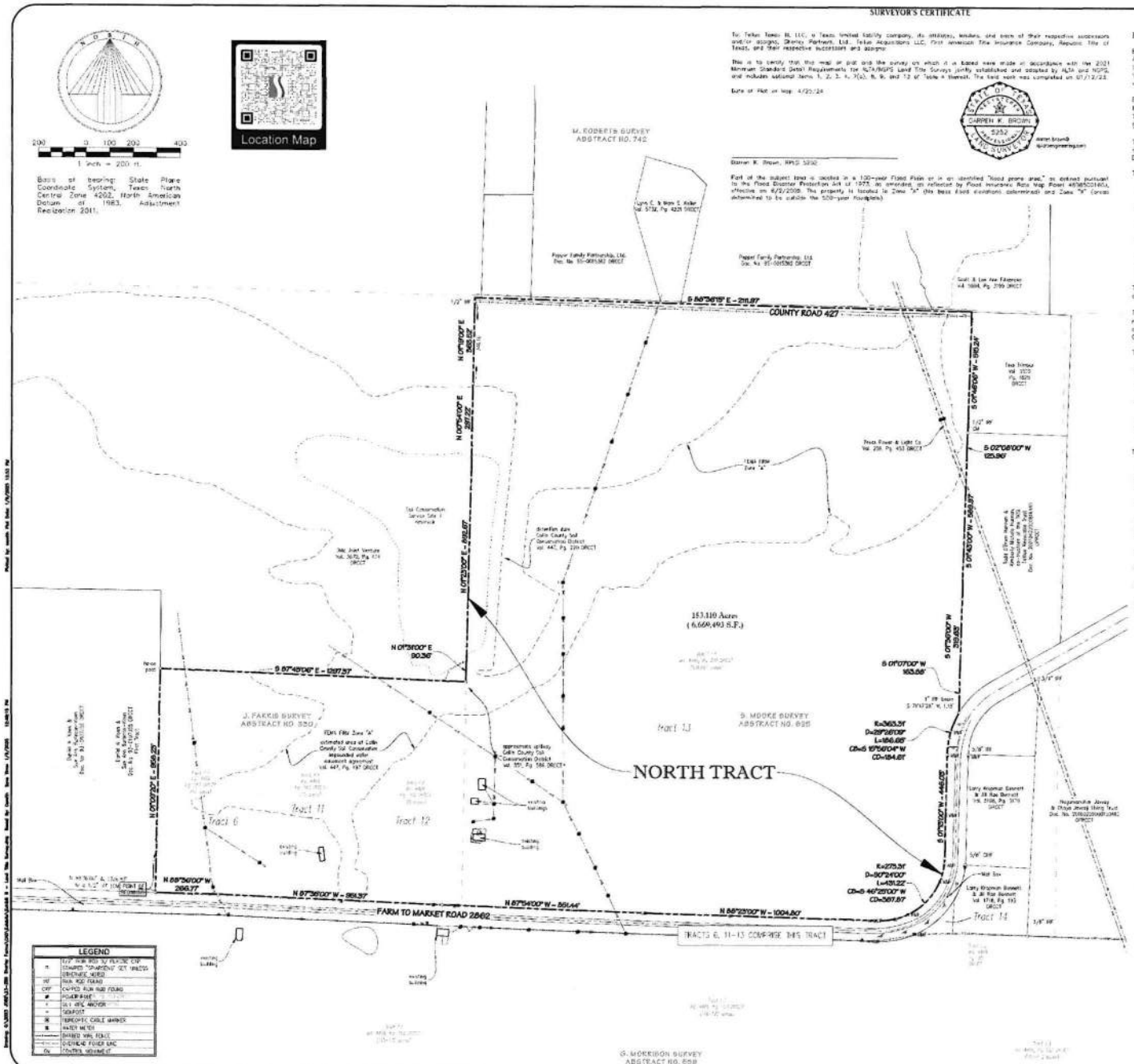

Surveyor's Certificate

To: Telkoi Texas III, LLC, a Texas limited liability company, its affiliates, lenders, and each of their respective successors and/or assigns, Sherley Partners, Ltd., Telkoi Acquisitions LLC, First American Title Insurance Company, Republic Title of Texas, and their respective successors and assigns:

This is to certify that this map or plat and the survey on which it is based were made in accordance with the 2021 Minimum Standard Detail Requirements for ALTA/NSPS Land Title Surveys jointly established and adopted by ALTA and NSPS, and includes optional items 1, 2, 3, 4, 7(a), 8, 9, and 13 of "Table A" thereof. The field work was completed on 01/12/23.

Date of Plat or Map: 4/25/24

Darren K. Brown, RPLS 5252

Part of the subject land is located in a 100-year Flood Plain or in an identified "flood prone area," as defined pursuant to the Flood Disaster Protection Act of 1973, as amended, as reflected by Flood Insurance Rate Map Panel 48085C0140J, effective on 6/25/2008. This property is located in Zone "X" (the base flood elevations determined) and Zone "X" (areas determined to be outside the 500-year floodplain).

Metes and Bounds Description

BEING a tract of land situated in the J. Farris Survey, Abstract No. 330, and the S. Moore Survey, Abstract No. 625, in Collin County, Texas, being part of Tract 1.7, recorded in Volume 4486, Page 153, Deed Records, Collin County, Texas (DRCCT), and part of Tracts 1.5 and 1.6, recorded in Volume 4486, Page 182 DRCCT, and all of Tract 1.1, recorded in Volume 4486, Page 201 DRCCT, with the subject tract being more particularly described as follows:

BEGINNING at a 1/2" iron rod with plastic cap stamped "SPIARSENG" set on the north line of Farm to Market Road 2862, a called 90'-foot-wide right-of-way, for the southeast corner of the "First Tract" conveyed to Daniel W. Keen and Sue Ann Burleson-Keen, recorded in Document No. 93-0107055 DRCCT, from which a 1/2" iron rod found bears N 88°36'00" W, 1326.83 feet;

THENCE N 01°09'20" E, 958.23 feet along the common line thereof to a fence post found for a southwest corner of a tract conveyed to 3Mc Joint Venture, recorded in Volume 3670, Page 174 DRCCT;

THENCE along the common line thereof the following:

S 87°43'06" E, 1297.37 feet to a 1/2" iron rod with plastic cap stamped "SPIARSENG" set;

N 01°31'00" E, 90.36 feet to a point on the bank of a reservoir;

N 01°23'00" E, 892.87 feet to a point on the bank of a reservoir;

N 08°54'00" E, 297.22 feet to a 1/2" iron rod with plastic cap stamped "SPIARSENG" set;

And N 01°19'00" E, passing at 346.16 feet a 1/2" iron rod found for witness, being on the south line of County Road 427, a public road, continuing into said road a total distance of 363.52 feet to a point for corner;

THENCE S 88°36'15" E, 2111.97 feet along said road to a point for corner being the northwest corner of a tract conveyed to Tina Trimbur, recorded in Volume 5570, Page 1829 DRCCT;

THENCE S 01°46'06" W, 515.24 feet along the west line thereof to a 1/2" iron rod found for the northwest corner of a tract conveyed to Todd O'Brien Hannon and Kimberly Michele Hannon, co-trustees, of the TKSL Tuition Revocable Trust, recorded in Document No. 20210042230080816440, Official Public Records, Collin County, Texas;

THENCE along the west line thereof, the following:

S 02°08'00" W, 125.98 feet to a 1/2" iron rod with plastic cap stamped "SPIARSENG" set;

S 01°43'00" W, 989.97 feet to a 1/2" iron rod with plastic cap stamped "SPIARSENG" set;

S 01°36'00" W, 319.63 feet to a 1/2" iron rod with plastic cap stamped "SPIARSENG" set;

And S 01°07'07" W, 163.58 feet to a 1/2" iron rod with plastic cap stamped "SPIARSENG" set on the north line of Farm to Market Road 2862, and from which a 1" iron rod found bears S 71°47'28" W, 1.15 feet;

THENCE along the north line of said Farm to Market Road, the following:

A non-tangent curve to the left having a central angle of 29°26'09", a radius of 363.31 feet, a chord of S 15°56'04" W – 184.61 feet, an arc length of 186.65 feet to a 1/2" iron rod with plastic cap stamped "SPIARSENG" set;

S 01°13'00" W, 446.03 feet to a 1/2" iron rod with plastic cap stamped "SPIARSENG" set;

A tangent curve to the right having a central angle of 90°24'09", a radius of 273.31 feet, a chord of S 46°25'56" W – 387.87 feet, an arc length of 431.22 feet to a 1/2" iron rod with plastic cap stamped "SPIARSENG" set;

N 88°23'00" W, 1004.80 feet to a 1/2" iron rod with plastic cap stamped "SPIARSENG" set;

N 87°54'00" W, 851.44 feet to a 1/2" iron rod with plastic cap stamped "SPIARSENG" set;

N 87°35'00" W, 951.37 feet to a 1/2" iron rod with plastic cap stamped "SPIARSENG" set;

And N 88°36'00" W, 266.77 feet to the POINT OF BEGINNING with the subject tract containing 6,669,493 square feet or 153.110 acres of land.

SURVEY RELATED SCHEDULE "B" - EXCEPTIONS	
First American Title Insurance Company GF No. 1202-1910661ATT Effective 1/5/2024	
10(a)	Easement to Texas Power and Light Company, recorded in Volume 208, Page 103, Real Property Records, Collin County, Texas. AFFECTS AS SHOWN
10(c)	Easement to Texas Power and Light Company, recorded in Volume 371, Page 513, Real Property Records, Collin County, Texas. AFFECTS, BLANKET IN NATURE
10(e)	Easement to Southwestern Bell Telephone Company, recorded in Volume 383, Page 488, Real Property Records, Collin County, Texas. AFFECTS, BLANKET IN NATURE
10(n)	Easement to the State of Texas, recorded in Volume 497, Page 100, Real Property Records, Collin County, Texas. DOES NOT AFFECT
10(o)	Easement to the State of Texas, recorded in Volume 497, Page 133, Real Property Records, Collin County, Texas. DOES NOT AFFECT
10(p)	Easement to the State of Texas, recorded in Volume 498, Page 237, Real Property Records, Collin County, Texas. DOES NOT AFFECT
10(r)	Easement to Collin County Soil Conservation District, recorded in Volume 447, Page 197, Real Property Records, Collin County, Texas. AFFECTS AS SHOWN
10(s)	Easement to Collin County Soil Conservation District, recorded in Volume 447, Page 222, Real Property Records, Collin County, Texas. AFFECTS AS SHOWN
10(u)	Easement to Collin County Soil Conservation District, recorded in Volume 551, Page 586, Real Property Records, Collin County, Texas. AFFECTS AS SHOWN
10(v)	Easement to Grayson-Collin Electric Cooperative, recorded in Volume 853, Page 157, Real Property Records, Collin County, Texas. 45(A)E, ELEVATED DESCRIPTION, UNABLE TO LOCATE
10(z)	Easement to Westminster Ground Utility District, recorded in Instrument No. 20190503000573310, Real Property Records, Collin County, Texas. AFFECTS, UNABLE TO LOCATE

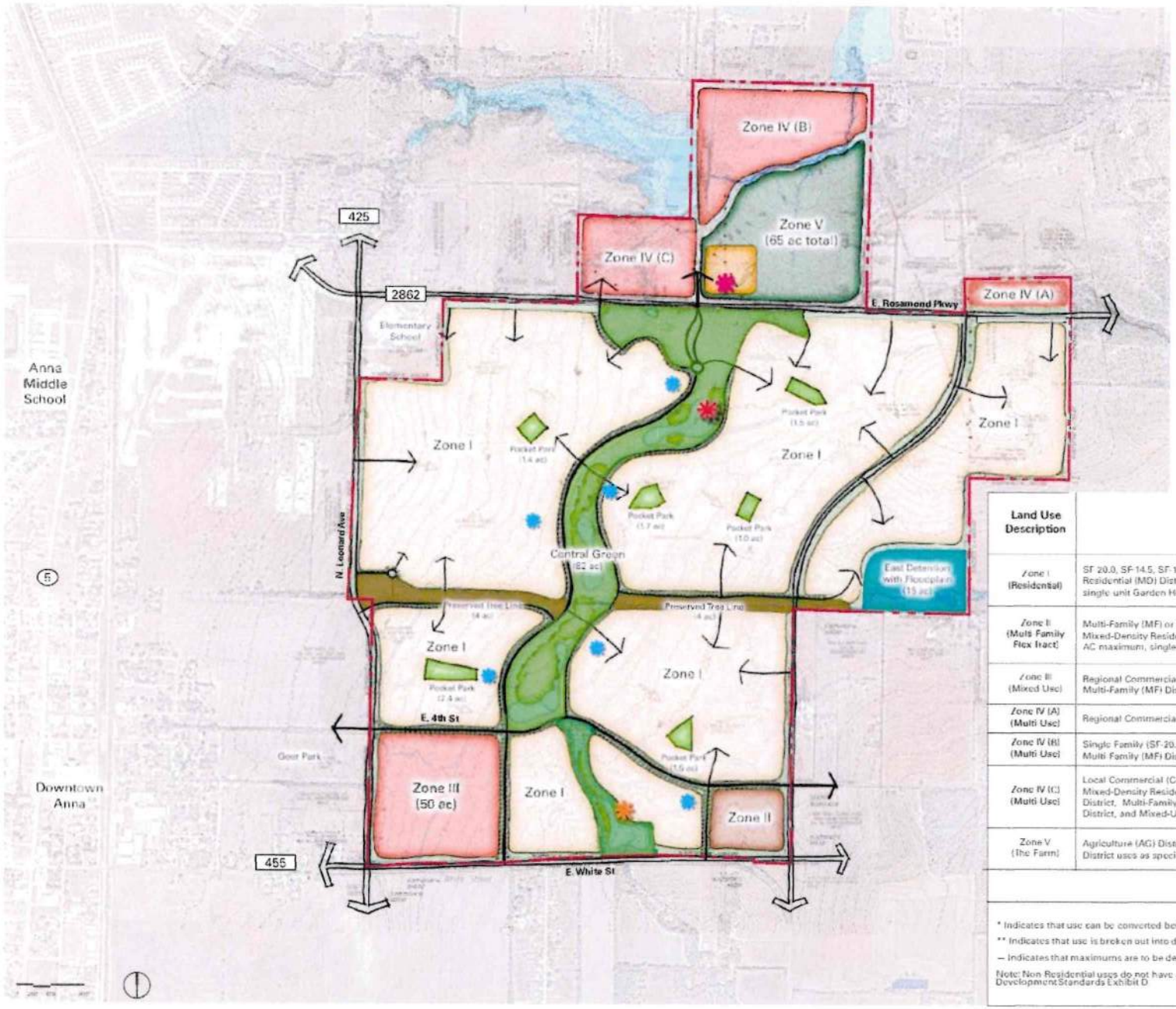

Open Space Summary		
	Central Green	+74 ac
	Preserved Tree Line	+8 ac
	East Detention with Floodplain	+15 ac
	Pocket Park	±10 ac
	Miscellaneous	+10 ac
	Total	±117 ac

Note: Pocket Park locations and sizes are conceptual and final location and size will be determined at platting

Legend

- A Farm-style Amenity Center with operational farming facilities for the benefit of community residents and the broader community
- Amenity Center No. 1 - to be precisely located at the time of Phase 1 Preliminary Plat
- Amenity Center No. 2 - to be precisely located and construction to start prior to the issuance of the 1,750th building permit
- Sherley Squares - conceptual locations to be determined through the platting process

Land Use Description	Zoning Classification	Maximums	
		Single-Family (SF) DUs	Multi-Family (MF) DUs
Zone I (Residential)	SF 20.0, SF-14.5, SF-12.0, SF-10.5, SF 8.4, SF 72, SF-6.0, Mixed Density Residential (MD) District and Mixed Use (MU) District limited to 8 AC Maximum, single unit Garden Homes and single unit Townhomes	3,000	0
Zone II (Multi Family Flex Tract)	Multi-Family (MF) or SF 20.0, SF-14.5, SF-12.0, SF-10.5, SF-8.4, SF-72, SF-6.0, Mixed-Density Residential (MD) District and Mixed-Use (MU) District limited to 8 AC maximum, single-unit Garden Homes and single-unit Townhomes	190*	200*
Zone III (Mixed Use)	Regional Commercial (C-2) District, Light Industrial (I-1) District, Multi-Family (MF) District, and Mixed-Density Residential (MD) District		600**
Zone IV (A) (Multi Use)	Regional Commercial (C-2) District and Light Industrial (I-1) District		
Zone IV (B) (Multi Use)	Single Family (SF-20.0) District, Single Family Cottage Residential District, and Multi Family (MF) District		
Zone IV (C) (Multi Use)	Local Commercial (C-1) District, Single Family Residential (SF20.0) District, Mixed-Density Residential (MD) District, Single Family Cottage Residential District, Multi-Family (MF) District, Agriculture (AG) District, Light Industrial (I-1) District, and Mixed-Use (MU) District		
Zone V (The Farm)	Agriculture (AG) District, Local Commercial (C-1) District and Mixed-Use (MU) District uses as specifically noted in Exhibit D Development Standards		
	TOTAL	3,190	800

* Indicates that use can be converted between single family and multi family as noted in the Development Standards Exhibit D.

** Indicates that use is broken out into different subcategories as noted in the Development Standards Exhibit D.

— Indicates that maximums are to be determined by site plans and plats as development occurs.

Note: Non Residential uses do not have a prescribed maximum other than available acreage and specific limits within the Development Standards Exhibit D

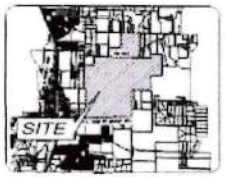

LOCATION MAP / KEY MAP

The information shown is based on the best information available and is subject to change without notice

EXHIBIT B - ILLUSTRATIVE LAYOUT

SHERLEY FARMS

PD25-0001

CITY OF ANNA, COLLIN COUNTY, TEXAS
G. MORRISON SURVEY - ABSTRACT NO. 559

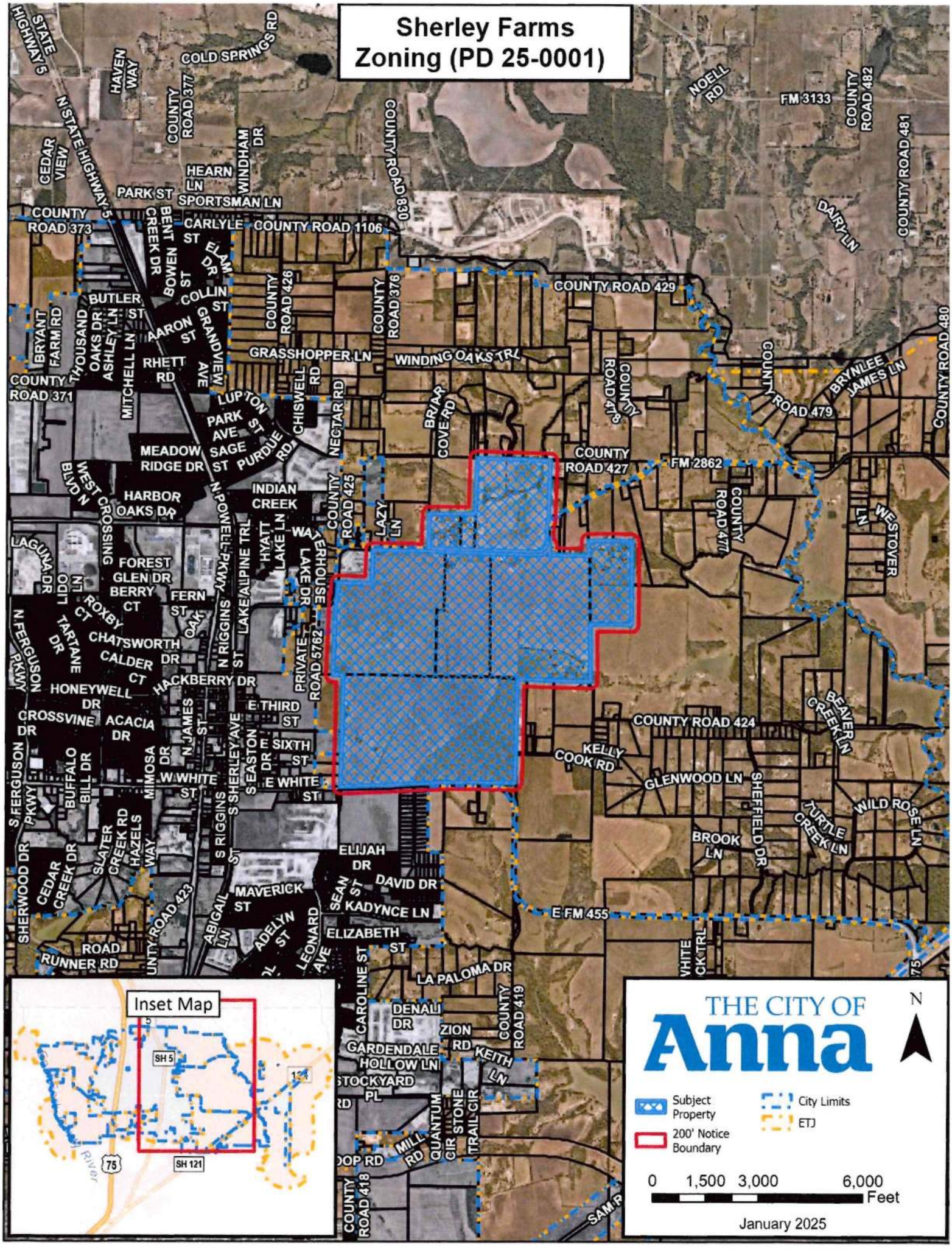
Sherley Farms
Zoning (PD 25-0001)
Inset Map
SH 5
SH 121
75
THE CITY OF
Anna
N
Subject Property
200' Notice Boundary
City Limits
ETJ
0 1,500 3,000 6,000
Feet
January 2025

CITY OF ANNA, TEXAS

RESOLUTION NO. 2024-12-1716

A RESOLUTION OF THE CITY OF ANNA, TEXAS APPROVING THE SHERLEY FARMS DEVELOPMENT AGREEMENT WITH TELLUS TEXAS III, LLC AND SHERLEY PARTNERS, LTD, RELATING TO DEVELOPMENT OF PROPERTY FOR A MIXED USE DEVELOPMENT

WHEREAS, Tellus Texas III, LLC and Sherley Partners, LTD (collectively, Developer) owns or controls approximately 1,123 acres of real property located in the municipal Extra-Territorial Jurisdiction of the City, in Collin County, Texas, (the "Property"); and

WHEREAS, the City Council and the Developer intend that the Property be developed in accordance with the Sherley Farms Development Agreement (the "Agreement") attached hereto as **Exhibit 1**:

NOW, THEREFORE, BE IT RESOLVED BY THE CITY COUNCIL OF THE CITY OF ANNA, TEXAS THAT:

Section 1. **Recitals Incorporated.**

The recitals above are incorporated herein as if set forth in full for all purposes.

Section 2. **Approval and Authority to Execute**

The City Council hereby approves the Sherley Farms Development Agreement, attached hereto as **Exhibit 1**, and authorizes the Mayor's execution of the same. The Mayor and/or City Manager are hereby authorized to execute all documents and take all other actions necessary to finalize, act under, and enforce the Agreement.

PASSED by the City Council of the City of Anna, Texas, on this 17th day of December 2024.

ATTESTED:

Carrie L. Land

Carrie L. Land, City Secretary

APPROVED:

Pete Cain, Mayor

THE CITY OF Anna TEXAS 1913

EXHIBIT 1

SHERLEY FARMS DEVELOPMENT AGREEMENT

This Sherley Farms Development Agreement (this "Agreement") is entered into by and between the CITY OF ANNA, TEXAS, a Texas home-rule municipality (the "City"), TELLUS TEXAS III, LLC, a Texas limited liability company and its successors and assigns ("Tellus"), and SHERLEY PARTNERS, LTD., a Texas limited partnership and its successors and assigns ("Owner" and together with Tellus, the "Developers") (each individually, a "Party," and collectively, the "Parties"), to be effective on the Effective Date.

SECTION 1
RECITALS

WHEREAS, certain capitalized terms used in these recitals are defined in Section 2; and

WHEREAS, the City is a home-rule municipality of the State of Texas; and

WHEREAS, Owner owns, and Tellus is under contract to purchase a portion of, the approximately 1,123 acres of real property, described by metes and bounds in **Exhibit A** (the "Property"); and

WHEREAS, the Property is located within the extraterritorial jurisdiction (the "ETJ") of the City; and

WHEREAS, it is intended that the Property, which is depicted in **Exhibit B**, be developed to contain single-family homes of various sizes, townhomes, multi-family, commercial and other mixed-use development constructed over multiple phases and is to be known and referred to as "Sherley Farms" (the "Project"), as generally depicted on the Illustrative Layout (as defined herein), which is attached hereto as **Exhibit C**, which may be revised as set forth in this Agreement, and in accordance with applicable City Regulations and the development standards set forth in certain proposed planned development standards ("Development Standards"), which Development Standards are attached hereto as **Exhibit D**; and

WHEREAS, the Illustrative Layout is intended to comply with the vision of the 2050 Comprehensive Plan; and

WHEREAS, the Owner and Tellus (to the extent Tellus has taken ownership of any portion of the Property) intend to file a voluntary petition for annexation of the Property; and

WHEREAS, the Parties intend for the City to provide water and sewer service to the Property; and

WHEREAS, the Developers desire and intend to design, construct and install and/or make financial contributions to certain Authorized Improvements to serve the Project; and

WHEREAS, in consideration of the Developers' agreements contained herein, the City shall use reasonable efforts to exercise its powers under Texas Local Government Code, Chapter 372 (the "PID Act") to create a PID (as defined herein) encompassing the Property to provide financing arrangements that will enable Developers to do the following in accordance with the

procedures and requirements of the PID Act and this Agreement: (a) fund or be reimbursed for a specified portion of the costs of the PID Projects using the proceeds of PID Bonds; or (b) obtain reimbursement for the specified portion of the costs of the PID Projects, the source of which reimbursement will be installment payments from Assessments within the PID, provided that such reimbursements shall be subordinate to the payment of PID Bonds and Administrative Expenses; and

WHEREAS, in consideration of the Developers' agreements contained herein, as allowed by law, the City agrees to exercise its powers under the TIRZ Act to create the TIRZ and to dedicate fifty percent (50%) of the City's ad valorem tax increment, less collection and administrative costs, attributable to the TIRZ, based on the City's tax rate each year and as authorized by law, for a period of up to forty (40) years: (a) for property located in a Single-Family Subzone (as defined herein) to offset or pay a portion of any Assessment levied on assessed parcels within the PID for the costs of Authorized Improvements that qualify as TIRZ Projects under the TIRZ Act and (b) for property located in a Commercial Subzone, to the extent such property is not subject to Assessments or all ad valorem tax increment generated on a particular parcel in the Commercial Subzone is not needed to offset Assessments, to fund a Chapter 380 Grant as described herein; and

WHEREAS, after creation of the PID and the TIRZ, all of the City's administrative costs associated with the PID will be funded by the levy of Assessments on the Property in accordance with the PID Act, and all of the City's administrative costs associated with the TIRZ will be funded from the TIRZ Revenue in accordance with the TIRZ Act; and

WHEREAS, the City desires to provide certain economic incentives related to the commercial development on the portions of the Property designated for commercial development;

WHEREAS, the Parties desire and intend for the design, funding, construction, and installation of the Public Infrastructure to occur in a phased manner over the Term of this Agreement and that Developers will dedicate to and the City will accept the Public Infrastructure for public use and maintenance, subject to the City's approval of the plans and inspection of the Public Infrastructure in accordance with this Agreement and the City Regulations; and

WHEREAS, the City, subject to the consent and approval of the City Council, and in accordance with the terms of this Agreement and all legal requirements, including but not limited to the Indenture, intends to: (i) adopt a Service and Assessment Plan; (ii) adopt an Assessment Ordinance (to pay for a specified portion of the PID Projects and approved by the City Engineer or his designee and the costs associated with the administration of the PID and the issuance of the PID Bonds for each respective Phase of the Project); and (iii) issue, in multiple series, estimated to be $300,000,000 in the principal amount of PID Bonds for the purpose of financing a specified portion of the costs of the PID Projects and paying associated costs as described herein; and

WHEREAS, unless expressly set forth to the contrary in this Agreement, it is the Parties' mutual intent that this Agreement shall supersede City Regulations only to the extent that City Regulations directly conflict with the terms of this Agreement; and

WHEREAS, the Developers understand and acknowledge that the obligations undertaken under this Agreement are primarily for the benefit of the Property; and

WHEREAS, the Developers understand and acknowledge that acceptance of this Agreement is not an exaction or a concession demanded by the City but rather is an undertaking of Developers' voluntary design to ensure consistency, quality, and adequate infrastructure that will benefit development of the Property; and

WHEREAS, following annexation of the Property, the City intends to consider zoning any portion of the Property in the corporate limits as a planned development district and the Parties acknowledge that the Property may be developed and used in accordance with this Agreement; and

WHEREAS, the City recognizes the positive impact the Public Infrastructure will bring to the City and that said improvements will promote state and local economic development, stimulate business and commercial activity in the City for the development and diversification of the economy of the state, promote the development and expansion of commerce in the state, and reduce unemployment or underemployment in the state; and

WHEREAS, as the Property is in the City's ETJ on the Effective Date of this Agreement, the Parties intend that this Agreement is a development agreement as provided for by state law in Section 212.171 *et seq* of the Texas Local Government Code; and

WHEREAS, this Agreement shall constitute a "permit" under Chapter 245 of the Texas Local Government Code and as allowed pursuant to Section 212.172(g) of the Texas Local Government Code and that all prerequisites for entering into such agreement have been completed in full and that the City has provided the Developers with the written disclosures required when offering this Agreement under Section 212.171(b-1), said section being incorporated herein as if set forth in full;

NOW, THEREFORE, in consideration of the mutual covenants contained herein, the Parties hereby agree as follows:

SECTION 2
DEFINITIONS

Certain terms used in this Agreement are defined in this Section 2. Other terms used in this Agreement are defined in the recitals or in other sections of this Agreement. Unless the context requires otherwise, the following terms shall have the meanings hereinafter set forth:

2050 Comprehensive Plan means the Anna 2050 Comprehensive Plan and applicable provisions of the Anna 2050 Parks Master Plan adopted by the City Council on April 27, 2021 under Ordinance No. 903-2021 and as amended as of the Effective Date.

Administrative Expenses means reasonable expenses incurred by the City in the establishment, administration, and operation of the PID and the TIRZ.

Administrator means an employee, consultant, or designee of the City who shall have the responsibilities provided in the Service and Assessment Plan, an Indenture, or any other agreement or document approved by the City related to the duties and responsibilities for the administration of the PID.

Assessment(s) means the special assessments levied on the Property pursuant to the PID Act on a Phase-by-Phase basis, under one or more Assessment Ordinances adopted on a Phase-by-Phase basis to reimburse the Developers on a Phase-by-Phase basis for a portion of the PID Projects benefitting the applicable Phase(s) as set forth in the Service and Assessment Plan, as well as payment of Administrative Expenses and repayment of the PID Bonds and the costs associated with the issuance of the PID Bonds.

Assessment Ordinance means an ordinance approved by the City Council under the PID Act levying one or more Assessment(s).

Authorized Improvements means the PID Projects and all on- and off-site public water, sewer, drainage, and roadway facilities, rights-of-way, along with other public improvements, such as parks, trails, landscaping and screening, that benefit the Property, are to be constructed by Developers, are identified on **Exhibit E**, and for which the Parties intend Developers will be fully or partially reimbursed pursuant to the terms of this Agreement.

Bond Ordinance means each ordinance adopted by the City Council that authorizes and approves the issuance and sale of any PID Bonds for the applicable Phase(s) of the Project.

Budgeted Cost means, with respect to any given Authorized Improvement, the estimated cost of the improvement as set forth by Phase in **Exhibit E**.

Capital Improvement(s) shall have the meaning provided in Chapter 395, Texas Local Government Code.

Capital Improvement Costs means any construction, contributions, or dedications of Capital Improvements, including actual costs of design, engineering, construction, acquisition, and inspection, and all costs related in any manner to the Capital Improvement.

Capital Improvements Plan or "CIP" means all capital improvements plan(s) duly adopted by the City under Chapter 395, Texas Local Government Code, as may be updated or amended from time to time.

Chapter 245 means Chapter 245, Texas Local Government Code, as amended.

Chapter 380 Agreement means an agreement, other than the Impact Fee 380 Agreement, in which the City agrees to provide a Chapter 380 Grant pursuant to Chapter 380, Texas Local Government Code, as amended.

Chapter 380 Grant means any grant provided by the City pursuant to a Chapter 380 Agreement as described in this Agreement.

Chapter 395 means Chapter 395, Texas Local Government Code, as amended.

City means the City of Anna, a home rule municipality located in Collin County, Texas.

City Code means the Anna City Code of Ordinances and all of its provisions and regulations or standards adopted by reference in said Code in effect on the Effective Date;

provided, however, that as it relates to Public Infrastructure for any given Phase, the applicable construction standards (including, without limitation, uniform building codes) shall be those that the City has duly adopted at the time of the filing of an application for a preliminary plat for that Phase unless construction has not commenced within two years of approval of such preliminary plat in which case the construction standards shall be those that the City has duly adopted at the time that construction commences, except that to the extent there is a conflict between the City Code and the Development Standards, the Development Standards shall control.

City Council means the City Council of the City.

City Engineer means the person or entity acting as the City Engineer.

City Manager means the current or acting City Manager of the City of Anna or a person designated to act on behalf of the City Manager if the designation is in writing and signed by the current or acting City Manager.

City PID Fee means the per single-family-residential-lot fee to be paid to the City in accordance with the established City PID Policy as of the Effective Date and in accordance with Section 5.21 hereof.

City PID Policy means the City of Anna Public Improvement District Policy approved by the City Council on June 23, 2020 via Resolution No. 2020-06-747.

City Regulations mean City Code provisions, ordinances, design standards (including but not limited to the City design standards and the Development Standards), uniform codes, policies, requirements, limitations, restrictions, and other regulations (including but not limited to all fees and land dedications applicable to the Project) duly adopted by the City and in effect on the Effective Date; provided, however, that as it relates to Public Infrastructure for any given phase, the applicable construction standards (including, without limitation, uniform building codes) shall be those that the City has duly adopted at the time of the filing of an application for a preliminary plat for that phase unless construction has not commenced within two years of approval of such preliminary plat in which case the construction standards shall be those that the City has duly adopted at the time that construction commences, except that to the extent there is a conflict between the City Regulations and the PD, the PD shall control. The term does not include Park Fees, which shall be waived on the Property in accordance with this Agreement.

Concept Plan means the intended conceptual plan for each Phase of the Project as may be approved by the City in accordance with Section 5.7 in which case it shall fully supersede and replace the Illustrative Layout.

Cost Underruns means actual PID Projects Costs that are less than the Budgeted Costs set forth in the SAP.

Developer means, when used in the singular, the entity developing and constructing Authorized Improvements on a particular Phase or portion of the Property, such entity being Tellus or the Owner as the context requires.

Developer Continuing Disclosure Agreement means any continuing disclosure agreement

of either of the Developers executed contemporaneously with the issuance and sale of PID Bonds.

Developer Improvement Account means each construction fund account created under an Indenture, if any, funded by either of the Developers, and used to pay for portions of the acquisition, design, and construction of the PID Projects for a particular Phase of the Project attributable to a Developer, the need for which account shall be determined on a Phase-by-Phase basis.

Development Standards mean the design specifications and construction standards identified in Section 5.13 of this Agreement, including without limitation the standards set forth in **Exhibit D** and applicable City Regulations.

Effective Date means the effective date of this Agreement, which shall be the date upon which all Parties have fully executed and delivered this Agreement and the City's legal counsel has signed this Agreement, approving same as to form; provided that, notwithstanding anything contained herein, no obligation of Tellus to construct Authorized Improvements on any portion of the Property that solely benefit such portion of the Property or obtain any easements or rights-of-way therefor shall take effect until Tellus has taken ownership of such portion of the Property.

End User means any tenant, user, or owner of a Fully Developed and Improved Lot, but excluding the HOA or POA.

Equivalent Dwelling Unit (EDU) means the water and/or sewer capacity equal to one single family residential unit.

ETJ shall have the meaning given to it in the Recitals.

Fully Developed and Improved Lot means any privately-owned lot in the Project, regardless of proposed use, intended to be served by the Authorized Improvements and for which a final plat has been approved by the City and recorded in the Real Property Records of Collin County, Texas.

HOA means one or more homeowners associations formed with respect to and single-family residential portion of the Project, which shall privately function as a homeowners association for the Project.

Home Buyer Disclosure Program means the disclosure provisions relating to property located in public improvement districts set forth in Chapter 5 of the Texas Property Code, which establish a mechanism to disclose to each buyer the terms and conditions under which their lot is burdened by Assessments.

Illustrative Layout means the intended plan for the development of the Project as depicted on **Exhibit C**.

Impact Fees means those fees assessed and charged against the Project in accordance with Chapter 395 and as defined therein.

Improvement Account of the Project Fund means the construction fund account created

under a particular Indenture, funded by the PID Bond Proceeds, and used to pay or reimburse for certain portions of the construction or acquisition of the PID Projects.

Indenture means a trust indenture by and between the City and a trustee bank under which PID Bonds are issued and funds are held and disbursed with respect to the particular Phase for which such PID Bonds are issued.

Independent Appraisal means, in establishing the appraised value, (i) the appraised value of a specific assessed parcel or assessed parcels, as applicable, in a specific Phase for which Assessments have been levied as established by publicly available data from the Collin Central Appraisal District, (ii) the Collin Central Appraisal District Chief Appraiser's estimated assessed valuation for completed homes (home and lot assessed valuation) and estimated lot valuation for lots on which homes are under construction, (iii) an "as-complete" appraisal delivered by an independent appraiser licensed in the State of Texas, which appraisal shall assume completion of the particular Phase for which said Assessments have been or will be levied, as applicable, or (iv) a certificate delivered to the City by a qualified independent third party (which party may be the Administrator or a licensed appraiser) certifying on an individual lot type basis, the value of each lot in the particular Phase, as applicable, for which such Assessments have been levied based on either (x) the average gross sales price (which is the gross amount including escalations and reimbursements due to the seller of the lots) for each lot type based on closings of lots in such Phase for which the Assessments have been levied or (y) the sales price in the actual lot purchase contracts in the particular Phase for which such Assessments have been or will be levied, as applicable.

Institutional Investor shall mean an entity or individual that intends or desires to purchase more than five (5) detached single-family lots within the Project to construct or cause to be constructed homes owned by such entity or individual thereon to be owned for rental or leasing purposes.

Notice means any notice required or contemplated by this Agreement (or otherwise given in connection with this Agreement).

Park Fees means those fees assessed and charged against the Project in accordance with Sections 9.02.135 and A3.006 of the City Code and shall include any "park development fees" as described in City Code.

Phase means any distinct phase of development on the Property which is to be developed concurrently as finished lots.

Phase 1 means the initial phase of development on the Property which is to be developed concurrently as finished lots.

Phase 2 means the first subsequent phase of development on the Property which is to be developed concurrently as finished lots after Phase 1.

PID means one or more public improvement districts encompassing all or a portion of the Property, for which the City agrees to exert reasonable efforts to create for the benefit of certain portions of the Project pursuant to the PID Act and this Agreement.

PID Act means Chapter 372, Texas Local Government Code, as amended.

PID Bond(s) means assessment revenue bonds, but not Refunding Bonds, issued by the City pursuant to the PID Act to finance the PID Projects.

PID Bond Proceeds means the funds generated from the sale of the PID Bonds.

PID Documents means, but not limited to, collectively, the PID Resolution, the SAP, and the Assessment Ordinance(s).

PID Financial Summary means the document attached to this Agreement as **Exhibit K**, which summarizes financial data related to the PID.

PID Projects means all water, wastewater/sewer, drainage, roadway, park, trail, landscape, irrigation, hardscape, and other improvements allowable under the PID Act and benefitting and necessary to serve the Project and which shall be owned by the City or dedicated to the City by easement and maintained by the City (unless the City requires another entity to maintain projects such as trails, parks or landscaping as provided in Section 5.6 herein), including those identified in the PID Documents and outlined in **Exhibit E**.

PID Projects Cost means the actual cost of design, engineering, construction, acquisition, and/or inspection of the PID Projects, along with Administrative Expenses associated with the PID.

PID Resolution means the resolution adopted by the Council creating the PID as recorded in the real property records of Collin County, Texas.

POA means one or more property owners associations that may be formed with respect to the commercial and multifamily portions of the Project.

Project and Finance Plan means a final TIRZ Project and Finance Plan approved and adopted by the City in accordance with this Agreement as such plan may be amended from time to time.

Public Infrastructure means all water, wastewater/sewer, detention and drainage, roadway, park and trail, and other infrastructure necessary to serve the full development of the Project and/or to be constructed by Developers and dedicated to the City under this Agreement. The term includes the PID Projects.

Real Property Records means the official land recordings of the Collin County Clerk's Office.

Refunding Bonds means bonds issued pursuant to Section 372.027 of the PID Act.

Reimbursement Agreement means an agreement by and between the City and the applicable Developer by which the Parties establish the terms by which the applicable Developer may obtain reimbursements for PID Projects through the PID Bond Proceeds or Assessments for the respective Phase.

School Site means a tract of land of up to ten (10) acres (or such size as agreed to by Tellus and Anna ISD at the time of dedication) that Tellus shall convey or dedicate to the Anna ISD (as defined herein) for use as a school.

Service and Assessment Plan ("SAP") means the service and assessment plan for the PID, to be adopted and updated at least annually by the City Council pursuant to the PID Act for the purpose of assessing allocated costs against portions of the Project located within the boundaries of the PID having terms, provisions, and findings approved by the City, as required by the PID Act and this Agreement.

TIRZ means a tax increment reinvestment zone encompassing any portion of the Property to be created by the City pursuant to the TIRZ Act.

TIRZ Act means Chapter 311 of the Texas Tax Code, as amended.

TIRZ Documents means collectively the TIRZ Project and Finance Plan, the TIRZ ordinance, and the TIRZ participation agreement(s) with other taxing entities, if applicable.

TIRZ Fund(s) means the fund(s) set up by the City in order to receive TIRZ funds in accordance with this Agreement, the TIRZ Documents and state law.

TIRZ Revenue means the tax increment received by the City from the City property taxes levied against the Property and to be deposited into the TIRZ Fund(s) in accordance with the TIRZ Act.

SECTION 3
PUBLIC IMPROVEMENT DISTRICT

3.1 Creation of the PID; Levy of Assessments. The City shall use reasonable efforts to initiate and approve all necessary documents, resolutions and ordinances, including without limitation the PID Documents, required to effectuate this Agreement, to create the PID encompassing the Property, and to levy the Assessments. For each Phase of development, the City will prepare and approve a preliminary Service and Assessment Plan (or amended Service and Assessment Plan) providing for the levy of the Assessments such Phase of the PID. Promptly following preparation and approval of a preliminary SAP acceptable to the applicable Developer for the portion of the Property being assessed and subject to the City Council making findings that the PID Projects confer a special benefit on the Property, the City Council shall consider an Assessment Ordinance for the applicable Phase within the PID. Developers shall develop the Property consistent with the terms of this Agreement. Nothing contained in this Agreement, however, shall be construed as creating a contractual obligation that controls, waives, or supplants the City Council's legislative discretion or functions.

3.2 Acceptance of Assessments and Recordation of Covenants Running with the Land. Prior to the levy of the Assessment applicable to a particular Phase of the Project, the applicable Developer shall: (a) approve and accept in writing the levy of the Assessment(s) on all land owned by the applicable Developer and (b) cause covenants running with the land to be recorded against the portion of the Property within the applicable Phase that will bind any and all current and

successor developers and owners of all or any part of such Phase of the Project to pay the Assessments, with applicable interest and penalties thereon, as and when due and payable hereunder and that the purchasers of such land take their title subject to and expressly assume the terms and provisions of such assessments and the liens created thereby. Assessments may not be levied on any land owned by a Developer without the express prior written consent of that Developer required by this section. The covenants required to be recorded under this paragraph shall be recorded substantially contemporaneously with the recordation of the final plat of the applicable Phase, except for the final SAP which will be recorded by the City upon its approval in accordance with the PID Act. The Developers hereby acknowledge and accept the Home Buyer Disclosure Program.

SECTION 4
AUTHORIZED IMPROVEMENTS, PID PROJECTS, AND PUBLIC INFRASTRUCTURE

4.1 PID Projects. Prior to the issuance of PID Bonds, the PID Projects and PID Projects Costs are subject to change as may be agreed upon by the Developers and the City and, if changed, shall be updated by Developers and the City consistent with the Service and Assessment Plan and the PID Act. All approved final plats within the Property shall include those PID Projects located therein and the respective PID Projects Costs shall be finalized before the applicable final plat is approved by the City Council. Without limiting the foregoing, and on a Phase-by-Phase basis, as applicable, PID Projects Costs, the timetable for installation of the PID Projects, and all other pertinent information and data will be reviewed at least annually by the Parties in an annual update of the Service and Assessment Plan adopted and approved by the City Council consistent with the requirements of Section 372.013(b) of the PID Act.

4.2 Construction, Ownership, and Transfer of Authorized Improvements and Public Infrastructure.

(a) Construction Standards and Inspection. Except as otherwise expressly set forth in this Agreement, the Authorized Improvements and all other Public Infrastructure required for the development of the Property shall be constructed and inspected in accordance with this Agreement, the City Regulations, and any other governing body or entity with jurisdiction over the Public Infrastructure. The Developers agree to cause all Public Infrastructure to be constructed in a good and workmanlike manner. Upon request, the City shall provide "tax-exempt" letters to Developers for use by all contractors, subcontractors, and suppliers installing Public Infrastructure within the Property.

(b) Contract Letting. The Parties understand that construction of the Authorized Improvements to be funded through Assessments are legally exempt from competitive bidding requirements pursuant to the Texas Local Government Code. The Parties acknowledge that, as of the Effective Date, the construction contracts for the construction of Authorized Improvements have not been awarded and contract prices have not yet been determined. Before entering into any construction contract for the construction of all or any part of the Public Infrastructure, the applicable Developer's engineer shall prepare, or cause the preparation of, and submit to the City all contract specifications and necessary related documents, including the contract proposal showing the negotiated total contract price and scope of work.

(c) Ownership. All of the Authorized Improvements and Public Infrastructure shall be owned by the City upon acceptance of them by the City. Subject to Section 5.20, the Developers agree to take any action reasonably required by the City to transfer or otherwise dedicate or ensure the dedication of easements or property for the Authorized Improvements and Public Infrastructure to the City and the public.

(d) Operation and Maintenance. Upon inspection, approval, and acceptance of the Authorized Improvements, the City shall maintain and operate the accepted Authorized Improvements (except to the extent the City requires another entity to maintain improvements in accordance with Section 5.6).

(e) Applicability. Subsections (a)-(b), above, shall not apply to Public Infrastructure that the City is obligated to fund and construct under this Agreement, if any.

4.3 Public Infrastructure, Generally. Except as otherwise expressly provided for in this Agreement, each Developer shall provide all Public Infrastructure necessary to serve the portion of the Project owned and being developed by such Developer, including without limitation streets, utilities, drainage, sidewalks, parks, trails, street lighting, street signage, and all other required improvements, at no cost to the City except as provided herein, and in accordance with City Regulations, and as approved by the City Engineer or his/her designee. The applicable Developer shall cause the installation of such improvements within all applicable time frames in accordance with the City Regulations unless otherwise approved herein. The applicable Developer shall provide engineering studies, plan/profile sheets, and other construction documents at the time of final platting as required by City Regulations. Such plans shall be approved by the City Engineer or his/her designee prior to approval of a final plat. Construction of any portion of the Public Infrastructure shall not be initiated until a pre-construction conference that includes a City representative has been held regarding the proposed construction and City has issued a written notice to proceed which includes such Public Infrastructure.

4.4 Maintenance Bonds. The applicable Developer shall execute or cause to be executed a valid maintenance bond in accordance with applicable City Regulations that guarantees the costs of any repairs which may become necessary to any part of the construction work performed in connection with the Public Infrastructure constructed by such Developer, arising from defective workmanship or materials used therein, for a full period of not more than two (2) years from the date of final acceptance of the Public Infrastructure constructed under any such contract(s).

4.5 Inspections, Acceptance of Public Infrastructure, and Developers' Remedy. The City shall inspect, as required by City Regulations, the construction of all Public Infrastructure necessary to support the proposed development within the Property, including without limitation water, sanitary sewer, drainage, streets, park facilities, electrical, and streetlights and signs. The City's inspections shall not release Developers from their responsibility to construct, or ensure the construction of adequate Authorized Improvements and Public Infrastructure with respect to their owned portions of the Property in accordance with approved engineering plans, construction plans, and other approved plans related to development of the Property. From and after the inspection and acceptance by the City of the Public Infrastructure and any other dedications required under this Agreement, such improvements and dedications shall be owned by the City. The Developers'

sole remedy for nonperformance of this Agreement by the City shall be to seek specific performance and cost reimbursements pursuant to the terms of this Agreement.

4.6 Insurance. The applicable Developer or its contractor(s) shall acquire and maintain, during the period of time when any of the Public Infrastructure with respect to the applicable Developer's owned property is under construction (and until the full and final completion of such Public Infrastructure and acceptance thereof by the City): (a) workers compensation insurance in the amount required by law; and (b) commercial general liability insurance including personal injury liability, premises operations liability, and contractual liability, covering, but not limited to, the liability assumed under any indemnification provisions of this Agreement, with limits of liability for bodily injury, death and property damage of not less than $1,000,000.00. Such insurance shall also cover any and all claims which might arise out of the Public Infrastructure construction contracts, whether by the applicable Developer, a contractor, subcontractor, material man, or otherwise. Coverage must be on a "per occurrence" basis. All such insurance shall be issued by a carrier which is rated "A-1" or better by A.M. Best's Key Rating Guide and licensed to do business in the State of Texas. Upon the execution of Public Infrastructure construction contracts, the applicable Developer shall provide to the City certificates of insurance evidencing such insurance coverage together with the declaration of such policies. Each such policy shall provide that, at least thirty (30) days prior to the cancellation, non-renewal or modification of the same, the City shall receive written notice of such cancellation, non-renewal or modification.

SECTION 5
ADDITIONAL OBLIGATIONS AND AGREEMENTS

5.1 Wastewater/Sanitary Sewer Facilities.

(a) Tellus Obligations. Tellus is responsible for the design, installation, and construction of the wastewater/sanitary sewer improvements necessary to serve the Property as generally depicted on **Exhibit F-1** (the "Major Sewer Improvements"), provided that Tellus and the City Engineer may mutually agree to modifications to the sizing and location of such improvements at the time of construction thereof. The design of all Major Sewer Improvements shall be approved by the City in advance of the construction of same and shall be constructed in accordance with the Exhibit F-3 (the "Sewer Improvements Schedule"). Subject to the City's obligations under Section 5.20 and Section 5.1(c), Tellus shall be responsible for the acquisition of any easements and other property acquisitions necessary for Major Sewer Improvements, the size and extent of each such easement or other property interest to be approved by the City. The maximum width of the required easement shall not exceed 2.5 times the depth of the sewer line for linear improvements. The locations of said easements or other property interests shall be approved by the City Engineer or his/her designee as part of the platting process. The City will reimburse Tellus for the costs of the Major Sewer Improvements, and costs of obtaining any necessary offsite easements for the Major Sewer Improvements, through the Eligible Infrastructure Grant as set forth in Section 7.3.

(b) Timing of Developers' Obligations. Except as otherwise provided herein, the applicable Developer shall complete in a good and workmanlike manner all on-site wastewater/sanitary sewer improvements necessary to serve each Phase of the Project owned by such Developer prior to the recordation of the final plat covering such Phase; provided that the

applicable Developer may submit the final plat for any Phase prior to the installation of such improvements if it obtains approval for and executes an improvement agreement and provides adequate security therefor in accordance with the City's Subdivision Regulations.

(c) City Constructed Sewer Infrastructure. The City will construct the sewer improvements shown on **Exhibit F-2** (the "City Constructed Sewer Infrastructure"). Design work, construction start, and construction completion of the City Constructed Sewer Infrastructure shall be in accordance with the timing shown on **Exhibit F-3** (the "Sewer Improvements Schedule"). The City may make adjustments to the scope of the City Constructed Sewer Infrastructure shown in **Exhibit F-2** and provide an updated timeline for construction of such revised City Constructed Infrastructure (the "Revised City Constructed Sewer Infrastructure"), subject to the review and approval by the City Engineer, if the City delivers to Developers (i) engineering studies reviewed and approved by the City Engineer showing that such Revised City Constructed Sewer Infrastructure (a) does not negatively impact the ability of the Project to flow its sewer downstream and (b) provides for access to sewer services consistent with the schedule set forth **Exhibit F-3** on the Effective Date, and (ii) an updated schedule for construction of such Revised City Constructed Sewer Infrastructure reflecting access to an equivalent number of ESFCs for each Phase of development shown in a manner consistent with the timing shown on **Exhibit F-3** on the Effective Date. After delivery of the foregoing, any such changes shall constitute an amendment to **Exhibit F-2** and **Exhibit F-3** upon the delivery of a written instrument signed by the City Manager approving same to the other Parties hereto, and thereafter references to "City Constructed Sewer Infrastructure" herein shall be deemed to refer to such Revised City Constructed Sewer Infrastructure.

Any adjustments solely to the timing of available capacity provided by the City Constructed Sewer Infrastructure shown in **Exhibit F-3** is subject to review and approval by Tellus and the City Engineer. The City and Tellus may amend **Exhibit F-3** by delivery of a written instrument signed by Tellus and the City Manager approving same to all parties hereto.

If the City does not complete the City Constructed Sewer Infrastructure in time or in a manner sufficient to serve a particular Phase of the Development as provided in the Sewer Improvements Schedule for any Phase of the Development (to the extent modified in accordance with the preceding paragraphs):

(i) the City agrees to provide, at its sole cost, pump and haul service for sewage until such time as the City Constructed Sewer Infrastructure is complete to serve that particular Phase of development, and shall approve plats and allow the issuance of building permits in the Development in accordance with Section 5.12 below. In the event that existing permanent infrastructure is insufficient to provide sewer services to any Phase of the Development and the City has to utilize pump and haul to accommodate sewer flows in such Phase of the Development, then the City, at City's cost, will construct the necessary sewer lines and lift station to facilitate a pump and haul operation from the location designated in Exhibit F-1 labeled "Prop. Regional Lift Station." Pump and haul services in any applicable Phase shall continue at City's cost until such time as the permanent sewer infrastructure is constructed in a manner to provide service for all flows produced in the applicable Phase of the Development for which the pump and haul services are being provided. The expected location of the "Proposed Regional Lift Station" is the northeast corner/quadrant

of the future intersection of FM 455 and the collector road illustrated on Exhibit F-1. Any alternative location for the "Proposed Regional Lift Station" shall be approved by the Developers as part of a good faith effort and, provided that the Developers have evidenced their written consent to the City, the location of the "Proposed Regional Lift Station" may be changed without an amendment to this Agreement.; and

(ii) the City agrees that it shall not withdraw any City PID Fees collected for the particular Phase until the City has completed the City Constructed Sewer Infrastructure for such Phase in a manner to permanently provide sewage service for such Phase without any pump and haul services described in (i), above.

5.2 Water Facilities.

(a) Developers' General Obligations. Developers are responsible for design, installation, and construction of the respective on-site water improvements necessary to serve the applicable portion of the Property owned and being developed by each. Subject to the provisions of Section 5.2(c) hereof, Tellus is responsible for design, installation, and construction of certain major water lines as generally depicted in as generally depicted on **Exhibit G** (the "Major Water Improvements") provided that Tellus and the City Engineer may mutually agree to modifications to the sizing and location of such improvements at the time of construction thereof The design of water improvements shall be approved by the City in advance of the construction of same. Subject to the City's obligations under Section 5.20, Tellus shall be responsible for the acquisition of any easements and other property acquisitions necessary for the Major Water Improvements, the size and extent of each such easement or other property interest to be approved by the City provided that the maximum width of the required easement shall not exceed 2.5 times the depth of the water line. The locations of said easements or other property interests shall be approved by the City Engineer or his/her designee as part of the platting process. Tellus' costs of obtaining such easements may be included in the projects to be reimbursed through the Eligible Infrastructure Grant. Tellus is not required to begin construction of a second point of connection to the City's water system until the issuance of the 250th certificate of occupancy for the Project.

(b) Timing of Developers' Obligations. Except as otherwise provided herein, the applicable Developer shall complete in a good and workmanlike manner all on-site water improvements necessary to serve each Phase of the Project owned by such Developer prior to the recordation of the final plat covering such Phase, provided that the applicable Developer may submit the final plat for any Phase prior to the installation of such improvements if it obtains approval for and executes an improvement agreement and provides adequate security therefor in accordance with the City's Subdivision Regulations.

(c) Major Water Improvements. Tellus will construct the Major Water Improvements each as depicted on **Exhibit G**. The Major Water Improvements shall be constructed in the size shown on **Exhibit G** or such dimensions as mutually agreed to by the City Engineer and Tellus at the time of construction of the Major Water Improvements and shall be oversized as mutually agreed to by the City Engineer and Tellus at the time of construction of the Major Water Improvements. The City will reimburse Tellus for the costs of the Major Water Improvements through the Eligible Infrastructure Grant.

5.3 Water and Wastewater Services; Ownership of Water and Wastewater Infrastructure.

(a) The City represents and confirms that it currently has and reasonably expects to continue to have the capacity to provide to the Property continuous and adequate retail water service at times and in capacities sufficient to meet the service demands of the Project as it is developed and reserves such capacity for the Project. The City agrees to provide a will-serve letter for water service upon written request of either of the Developers.

(b) It is acknowledged that the City currently has sufficient wastewater capacity for the expected 957 Equivalent Dwelling Units in Phase 1 and Phase 2 of the Project. The City agrees to make such capacity available to Tellus. The City shall expand the capacity of its wastewater treatment system in accordance with **Exhibit F-2** and the Sewer Improvements Schedule on **Exhibit F-3** to provide for service to each Phase of the Development in accordance with the Sewer Improvements Schedule and agrees to reserve capacity for each Phase of the Development as each phase of the City Constructed Sewer Improvements is completed. The City agrees to provide a will-serve letter for wastewater service upon written request of either of the Developers.

(c) Upon acceptance by the City of the water and wastewater facilities described herein, the City shall operate or cause to be operated said water and wastewater facilities serving the Project and use them to provide service to all customers within the Project at the same rates as similar projects located within the City. Upon acceptance by the City, the City shall at all times maintain said water and wastewater facilities, or cause the same to be maintained, in good condition and working order in compliance with all applicable laws and ordinances and all applicable regulations, rules, policies, standards, and orders of any governmental entity with jurisdiction over same.

5.4 Roadway Facilities and Drainage Improvements.

(a) Developers General Obligations. Developers are respectively responsible for the design, installation, and construction of all on-site roadway facilities required to serve the portions of the Property owned and being developed by such Developer. Subject to the provisions of Section 5.4(d) hereof, Tellus is responsible for design, installation, and construction of certain major road improvements as generally depicted on **Exhibit H** (the "Major Roadway Improvements") and such Major Roadway Improvements shall be reimbursed through the Eligible Infrastructure Grant. The design of all roadway improvements shall be approved by the City in advance of the construction.

(b) Timing of General Obligations. Prior to the recordation of any final plat for any Phase of the Project, the applicable Developer shall complete, in a good and workmanlike manner, construction of all on-site roadway facilities and related improvements necessary to serve such Phase in accordance with construction plans approved by the City; provided that the applicable Developer may submit the final plat for any Phase prior to the installation of such improvements if it obtains approval for and executes an improvement agreement and provides adequate security therefor in accordance with the City's Subdivision Regulations. Thereafter, the roads shall be conveyed to the City for ownership and maintenance.

(c) Drainage/Detention Infrastructure. The Developers shall have full responsibility for designing, installing, and constructing the drainage/detention infrastructure that will serve their applicable portions of the Property and the cost thereof and said infrastructure shall be designed and constructed in accordance with applicable City Regulations. Neither Developer shall be responsible for the design, installation or construction of drainage/detention infrastructure unless located on that Developer's property and a Developer may not construct drainage/detention infrastructure with a material impact on the other Developer's property without the express written consent of the other Developer. Prior to the recordation of the final plat for any Phase of development, the applicable Developer shall complete in a good and workmanlike manner construction of the drainage/detention improvements necessary to serve such Phase provided that the applicable Developer may submit the final plat for any Phase prior to the installation of such improvements if it obtains approval for and executes an improvement agreement and provides adequate security therefor in accordance with the City's Subdivision Regulations. Upon inspection, approval, and acceptance, City shall maintain and operate the drainage improvements for the Property. The HOA, POA, or other entity as applicable, will maintain and operate all detention facilities except to the extent expressly set forth to the contrary in this Agreement.

(d) CR 424 Improvements. Within the Project, Tellus shall construct what is currently referenced on the City's Thoroughfare Plan as CR 424 as a collector road section in an alignment generally consistent with that shown on **Exhibit H-1** unless the Developers mutually agree that the project traffic impact analysis does not support that option. Should the traffic impact analysis not support the layout in **Exhibit H-1** and/or collector road section for CR 424 in **Exhibit D,** Tellus will construct a subsequent alternative option as mutually approved by the City Engineer and Developers. To the extent that an alternative option is provided by Owner, Tellus or City, the applicable other Parties shall have sixty calendar days to review and respond to such alternative option in writing.

5.5 Infrastructure Oversizing. The Developers shall not be required to construct or fund any Public Infrastructure so that it is oversized to provide a benefit to land outside the Property ("Oversized Public Infrastructure") unless, by the commencement of construction, the City has made arrangements to finance the City's portion of the costs of construction of such improvements attributable to the oversizing required by the City from sources other than PID Bond Proceeds, funds from the TIRZ that the City is obligated to utilize for this Project under Section 7.1, Assessments, or the Eligible Infrastructure Grant. In the event either of the Developers is required by the City to construct or cause the construction of any Oversized Public Infrastructure on behalf of the City, the City shall be solely responsible for all costs attributable to the oversizing of the Oversized Public Infrastructure and none of the PID Bond Proceeds, the TIRZ Increment that the City is obligated to utilize for this Project under Section 7.1, or the Eligible Infrastructure Grant shall be utilized for financing the costs of Oversized Public Infrastructure that is attributable to the oversizing of the Oversized Public Infrastructure.

5.6 Mandatory HOA and POA. If a Phase includes single family residential, then Developers will create, in a manner acceptable to the City, an HOA, which HOA, whether one or more, shall be required to levy and collect from home owners within the PID HOA fees (annually, quarterly or monthly) in an amount calculated to maintain the open spaces, parks, common areas, hike and bike trails located in common areas, portions of which trails and parks will be open to the public, right-of-way irrigation systems, raised medians and other right-of-way landscaping, and

screening walls within the PID. Common areas including but not limited to screening, landscaping, gardens, entrances to the Property and right-of-way landscaping shall be maintained solely by the HOA. Maintenance of public rights-of-way landscaping and screening by the HOA shall comply with City Regulations and the HOA shall be subject to enforcement by the City. To the extent that a Phase includes commercial or multifamily development with open space, common areas, and the like that are shared by more than one separately platted parcel, then, such common areas, open space and the like shall be maintained by a POA created for such commercial or multifamily development in the manner set forth in this paragraph or shall be maintained under a reciprocal easement agreement, declaration of covenants, conditions and restrictions, or other covenant regarding land use. To the extent a POA is created, the applicable declarant shall have the option of whether or not to include single-family residential in such POA.

5.7 Illustrative Layout; Concept Plan.

(a) The Illustrative Layout illustrates the approved development layout for the Property but has not been engineered and does not represent the final design that will be approved through the final platting process. Prior to approval of the Zoning, the Developers may revise the Illustrative Layout through an administrative approval, provided the number of residential lots shown on the Illustrative Layout does not increase by greater than ten percent (10%), the numbers of residential lots in each category shown on the Illustrative Layout does not increase by greater than ten percent (10%), and the amount of open space shown on the Illustrative Layout does not decrease by greater than ten percent (10%). Nothing in this paragraph shall preclude Developers from applying directly to the City Council for approval of any Illustrative Layout revisions, including revisions greater than the percentages listed herein. If the Developers submit a revised Illustrative Layout as provided by this section and the City Manager or his/her designee determines that the Illustrative Layout should be administratively approved, the City Manager or his or her designee shall cause the revised Illustrative Layout to be attached to the official version of this Agreement on file with the City's Secretary's office, and the Developers shall record a memorandum of the revised Illustrative Layout in the Real Property Records.

(b) A Concept Plan will be required as part of the zoning process identified in Section 9.1 and the Concept Plan, once approved by the City, shall be deemed to fully supersede and replace the Illustrative Layout for all purposes. Revisions to the Concept Plan that is part of approval of zoning may be subsequently revised with approval by the City Council and/or the Planning and Zoning Commission through the normal zoning process.

(c) If the Developers submit a Concept Plan as provided by this section and the City Manager or his/her designee determines that the Concept Plan should be administratively approved, the City Manager or his or her designee shall cause the revised Concept Plan to be attached to the official version of this Agreement on file with the City's Secretary's office, and Developers shall record a memorandum of the revised Concept Plan in the Real Property Records.

5.8 Community Amenities. Tellus will (or will cause) the design, construction, maintenance, and operation of certain amenities in the Project as described in (a) and (b) below.

(a) Tellus shall be required to construct the following three (3) amenities:

(1) An amenity center located in Phase 1 (the "Phase 1 Amenity Center") on a minimum 2 -acre site containing an amenity center building of at least 4,000 sf air conditioned square feet which can be split between multiple buildings, a minimum 3,500 sf -size swimming pool which can be split between multiple pools, bathrooms, a playground and an open recreation area, which amenity center shall commence construction prior to the 250th building permit and shall be completed within twenty four (24) months of commencement;

(2) A second amenity center located generally as shown on **Exhibit C** containing an amenity center building or shaded structure, bathrooms, a playground and an open recreation area to commence construction prior to the 1,750 building permit and shall be completed within eighteen (18) months of commencement;

(3) A working farm-style amenity center with operational farming facilities (the "Farm Amenity"). Tellus will commence construction of the first phase of the Farm Amenity prior to the 600th building permit and shall complete construction of the first phase within eighteen (18) months of commencement. The Farm Amenity shall be solely owned, operated and maintained by Tellus, a Tellus controlled entity or the HOA. The Farm Amenity will include a minimum five (5) -acre programmed site adjacent to the working farm. The first phase of the Farm Amenity will include the following features at a minimum: a working farm, a structure for agricultural education, a multi-use field area for events, and a parking lot;

(b) Tellus will (or will cause) the design, construction, maintenance, and operation of certain amenities in the Project. Tellus shall be required to construct four (4) of the following nine (9) amenities (such four (4) amenities, together with the three required amenities in this section, collectively, the "Community Amenities"):

(i) playground (2-5 years of age);

(ii) playground (5-8 years of age);

(iii) sand volleyball court or tennis court or pickleball court;

(iv) basketball court;

(v) the trails and open space described in Section 5.9;

(vi) outdoor workout equipment along hike and bike trails;

(vii) Three or more pocket parks at least 1 acre in size each;

(viii) dog park; and

(ix) park benches, trash cans, and pet stations along the trail and in the dog.

General depictions of a portion of the Community Amenities, which are provided as examples but are not binding on Tellus, are included on Exhibit I. To the extent that any Community Amenities may be included as PID Projects pursuant to the PID Act, the City may, at the City's sole discretion, accept dedication of such Community Amenities, and such Community Amenities may be maintained by the City or the HOA, as applicable. To the extent any Community Amenities are

not owned or dedicated to the City and maintained by the City, such Community Amenities shall be owned and maintained by the HOA.

5.9 Parkland Dedication Credit. Tellus shall timely improve and construct the Farm Amenity and timely construct trails and dedicate such trails as outlined in this Section 5.9, and the applicable Developer shall dedicate open space in the final plat for each phase each as generally depicted on **Exhibit J** (collectively, the "Trails and Open Space Acreage"). Provided the Developers cause such Trails and Open Space Acreage to be dedicated for such purposes, Developers shall be deemed to have satisfied all applicable parkland dedication or improvement requirements or fees required in lieu thereof, of any kind whatsoever and no Park Fees shall be imposed on the Property. To be considered timely for any given Phase, with respect to open space, the applicable Developer shall dedicate the open space applicable to such Phase as shown on **Exhibit J** at the time of the filing of the final plat for such Phase, with respect to the trails applicable to such Phase, and complete construction of such trails within nine months of the recordation of the final plat for such Phase, subject to force majeure. For any Phase that is developed without Developer timely causing such Trails and Open Space Acreage to be constructed and dedicated as shown on **Exhibit J**, the City's otherwise applicable Park Fees shall apply and not be waived for such Phase. Notwithstanding the foregoing to the contrary, by execution of this Agreement, Owner shall be deemed to have satisfied all applicable parkland dedication or improvement requirements or fees required in lieu thereof, of any kind whatsoever and no Park Fees shall be imposed on Zone III and Zone IV (as identified on the Illustrative Layout). Any dedication of Trail and Open Space Acreage under this Section 5.9 may be by public access easement or fee dedication at the election of the applicable Developer. For the avoidance of doubt, the Developers shall not be required to provide a public access easement or dedication of any amenity center described in Section 5.8.

5.10 Impact Fees.

(a) Impact Fees shall be assessed and collected on the Property at the rates in effect at the time of submission of an application for a building permit. The City shall collect Impact Fees from all third-party permit applicants within the Property. Upon the payment of Impact Fees, such payments shall be sequestered into a separate account created with the City (the "Sherley Farms Impact Fee Account") to facilitate the payment of the Eligible Infrastructure Grant described in Section 7.3 hereof.

(b) To the extent that the Eligible Infrastructure is not currently included in the City's CIP, the City agrees to take all necessary steps to include Eligible Infrastructure, along with any additional Authorized Improvements that may reasonably qualify as Capital Improvements, in the City's CIP. The City acknowledges that Tellus is providing certain Capital Improvements on the Property and the Eligible Infrastructure, to the City at the initial cost of Tellus.

5.11 Dedication of Water Tank Site and School Site.

(a) When requested by Anna Independent School District ("Anna ISD"), Tellus shall convey or dedicate the School Site to Anna ISD and such conveyance shall include restrictive covenants that shall prevent certain commercial uses and electronic, radio, electromagnetic or other similar wireless transmission equipment.

(b) Tellus shall, at the request of the City after Tellus has taken ownership of the applicable portion of the Property, convey a site of up to 1.5 acres located in the PID to the City for use in construction of an elevated water storage tank. The elevated storage tank site (the "Elevated Storage Tank Site") shall be in a location mutually agreeable to the City and Tellus at the time of conveyance and such conveyance shall include restrictive covenants that shall prevent certain commercial uses and electronic radio, electromagnetic or other similar wireless transmission equipment. The dedication and conveyance of such Elevated Storage Tank Site shall be reimbursable through the Eligible Infrastructure Grant.

(c) Notwithstanding subsection (b), above, if the City determines to construct a fire station at the Elevated Storage Tank Site, then Tellus shall increase the size of the conveyance to a total of three (3) contiguous acres with the same restrictive covenants described in said subsection (b); provided, however, that such restrictive covenants shall not restrict the use of any equipment that is necessary for emergency services communications purposes.

(d) In addition to subsections (a), (b) and (c), above, if the City adopts an ordinance governing electronic radio, electromagnetic or other similar wireless transmission equipment, the Developers and the City shall endeavor in good faith to amend the applicable zoning to govern the use of electromagnetic transmission equipment within the Property.

5.12 Withholding of Building Permits, Etc. The City shall not be required to issue any building permits or certificates of occupancy or provide utilities for any structure on the Property until after the applicable final plat is approved, the City approves the applicable maintenance bond(s) required under Section 4.4, and the City issues final written acceptance of any Public Infrastructure necessary to serve such applicable portion of the Property with utility, fire safety (i.e., paving complete and water system/hydrants installed, tested and pressurized) and roadway service; provided that the City shall allow for the issuance of building permits for up to 10% of the single-family building permits in any Phase of the Development once the applicable Developer has achieved fire safety. To assist in the determination as to whether building permits for any Phase of development should be issued, the applicable Developer shall include all Public Infrastructure necessary to serve such Phase with utility, fire safety, and roadway service in the construction plans required to be submitted under applicable City Regulations. Notwithstanding the foregoing, the City shall not unreasonably withhold plat approval for any Phase of development and shall issue building permits and certificates of occupancy and provide utilities for any structure on the Property if the applicable Public Infrastructure to provide utility and roadway service other than the City Constructed Sewer Infrastructure shown on **Exhibit F-2** is complete and pump and haul service is being provided pursuant to Section 5.1 of this Agreement.

5.13 Governing Regulations. Development of the Property shall be governed by the following regulations (collectively, the "Governing Regulations," all of which are incorporated into this Agreement as if set forth in full):

(a) City Code, Article 9.02, the subdivision regulations of the City, in effect on the Effective Date (the "Subdivision Regulations");

(b) except as amended by the Development Standards (defined below), the comprehensive zoning ordinance of the City, in effect on the Effective Date (the "Zoning

Ordinance");

(c) City Code, Article 9.05, in effect on the Effective Date (the "Sign Ordinance");

(d) the Illustrative Layout set forth on **Exhibit C** and the development regulations for the Property set forth on **Exhibit D** (except as otherwise approved in accordance with Section 5.15 in the event of conflicts) (the "Development Standards");

(e) upon annexation pursuant to Section 9.1, the uniform building codes, as amended from time to time, including any local amendments thereto adopted by the City (the "Building Codes"). The term "Building Codes," as applied to a particular building shall mean the Building Codes in effect on the date the first application is filed for a building permit for the building in question. For the avoidance of doubt, the Building Codes shall only apply to the Property from and after annexation of the Property. As it relates solely to Property Public Infrastructure for any given Phase of the Project—notwithstanding any provision of this Agreement—the applicable construction standards (including, without limitation, the Building Codes) shall be those that the City has duly adopted at the time of the filing of an application for a preliminary plat for such Phase containing the Property Public Infrastructure in question; and

(f) except as set forth in this Agreement to the contrary, any other applicable provisions of Chapter 4 (Building Regulations), Chapter 6 (Fire Prevention and Protection), Chapter 9 (Planning and Development Regulations), Chapter 12 (Utilities) and Appendix A (Fee Schedule) of the City Code in effect on the Effective Date.

The Governing Regulations are the controlling regulations for development of the Property, and no other City Regulations, rules, standards, policies, orders, guidelines, or other City-adopted or City-enforced requirements of any kind (including but not limited to any moratorium adopted by the City) apply to the use or development of the Property to the extent such regulations or requirements are in conflict with the Governing Regulations or this Agreement. The Governing Regulations are considered part of this Agreement and are incorporated herein by reference for all purposes.

5.14 Compliance with Materials and Methods Regulations. It is expressly understood that the City Regulations (as amended by the Governing Regulations and this Agreement) are enforceable as relates to the Property and its use and development, including but not limited to any such City Regulations that would otherwise be unenforceable under Chapter 3000 of the Texas Government Code ("Materials and Methods Regulations") and the Material and Methods Regulations are incorporated herein as if set forth in full; provided, however, to the extent of any conflict between the requirements of the Materials and Methods Regulations and the requirements of this Agreement, this Agreement shall control. The Zoning Ordinance shall also be considered to be Materials and Methods Regulations to the extent that its requirements and restrictions would otherwise be unenforceable under Chapter 3000 of the Texas Government Code

5.15 Conflicts. When not in conflict with the terms and conditions of this Agreement, the development of the Property shall be subject to all applicable City Regulations, including but not limited to the City's subdivision regulations and engineering design standards. In the event of

any conflict between the Development Standards and the Zoning Ordinance, Sign Ordinance, or Building Codes, the Development Standards shall control until the PD Zoning (as defined herein) has been approved by the City. After the PD Zoning has been approved for the Property, in the event of a conflict between the PD Zoning and the Development Standards, the Zoning Ordinance, Sign Ordinance, or Building Codes, the PD Zoning shall control for such portion of the Property subject to the PD Zoning, and no amendment to the applicable PD Zoning shall require an amendment to this Agreement. In the event of a conflict between the Governing Regulations and the City Regulations, the Governing Regulations shall control. In the event of any conflict between this Agreement and any other ordinance, rule, regulation, standard, policy, order, guideline or other City-adopted or City-enforced requirement, whether existing on the Effective Date or hereinafter adopted, unless otherwise agreed by the Parties, this Agreement shall control. In the event of any conflict between the Illustrative Layout and the remainder of the Development Standards in **Exhibit D**, the remainder of the Development Standards in **Exhibit D** shall control. In the event of any conflict between any future Concept Plan and the Development Standards in **Exhibit D**, the Development Standards in **Exhibit D** shall control (except for modifications to the Illustrative Layout that are allowed pursuant to the terms of the Development Standards and/or Zoning Ordinance).

5.16 Phasing. The Property may be developed in phases and the applicable Developer must submit the appropriate plat(s) for each Phase, and, if permitted under applicable law, may submit a replat or amending plat for all or any portions of the Property. Any plat, replat or amending plat shall be in conformance with applicable City Regulations and be subject to City approval.

5.17 Vested Rights. This Agreement shall constitute a "permit" (as defined in Chapter 245) that is deemed filed with the City on the Effective Date.

5.18 Approval of Plats/Plans. Approval by the City, the City Engineer, or other City employee or representative, of any plans, designs, or specifications submitted by the applicable Developer pursuant to this Agreement or pursuant to applicable City Regulations shall not constitute or be deemed to be a release of the responsibility and liability of the applicable Developer, its engineers, employees, officers, or agents for the accuracy and competency of their design and specifications. Further, any such approvals shall not be deemed to be an assumption of such responsibility and liability by the City for any defect in the design and specifications prepared by the applicable Developer or the applicable Developer's engineers, or their respective officers, agents, servants or employees, it being the intent of the Parties that approval by the City Engineer or his/her designee signifies approval on only the general design concept of the improvements to be constructed.

5.19 Agricultural Exemption. The City acknowledges that some or all of the Property may now have or may in the future have an agricultural, timber, or wildlife management use tax classification, and the City may not request removal of any such tax classification for any Property within the PID until PID Bonds secured by Assessments levied in the applicable portion of the PID are issued to pay for the costs of the PID Projects and related costs and development within the applicable portion of the PID has commenced to a degree that would trigger a change in use tax exemption under state law, notwithstanding any waiver of such exemption for other political subdivisions or public entities.

5.20 Eminent Domain. Tellus agrees to use commercially reasonable efforts to obtain all third-party rights-of-way, consents, or easements, if any, required for any off-site Public Infrastructure. To the extent required, the Developers agree to use commercially reasonable efforts to obtain all third-party rights-of-way, consents, or easements, if any, required for any on-site Public Infrastructure being constructed by such Developer. If, however, the applicable Developer is unable to obtain such third-party rights-of-way, consents, or easements within ninety (90) days of sending an initial offer to the owner of such property to purchase the needed easements and right-of-way, the City agrees to take reasonable steps to secure same (subject to City Council authorization after a finding of public necessity) through the use of the City's power of eminent domain. The City shall request and order any appraisal required in connection with the applicable Developer's (if requested by such Developer) or the City's acquisition of such third-party rights-of-way, consents, or easements as described in the preceding two sentences, and the applicable Developer shall pay the costs of such appraisal. The applicable Developer shall be responsible for funding all reasonable and necessary legal proceeding/litigation costs, attorney's fees and related expenses, and appraiser and expert witness fees (collectively, "Eminent Domain Fees") actually incurred by the City in the exercise of its eminent domain powers that for any reason are not funded by the PID Bond Proceeds and shall escrow with a mutually agreed upon escrow agent the City's reasonably estimated Eminent Domain Fees both in advance of the initiation of each eminent domain proceeding and as funds are needed by the City. Provided that the escrow fund remains appropriately funded in accordance with this Agreement, the City will use all reasonable efforts to expedite such condemnation procedures so that the Public Infrastructure can be constructed as soon as reasonably practicable. If the City's Eminent Domain Fees exceed the amount of funds escrowed in accordance with this paragraph, the applicable Developer shall deposit additional funds as requested by the City into the escrow account within ten (10) days after written notice from the City. Any unused escrow funds will be refunded to the applicable Developer within thirty (30) days after any condemnation award or settlement becomes final and non-appealable. Nothing in this section is intended to constitute a delegation of the police powers or governmental authority of the City, and the City reserves the right, at all times, to control its proceedings in eminent domain.

To the extent Eminent Domain Fees are paid by a Developer, the applicable Developer may seek reimbursement of any or all eligible Eminent Domain Fees from PID Bonds, or if PID Bonds are not issued, Assessments.

5.21 Payment of City PID Fee.

Tellus shall deposit or cause to be deposited the amount of the City PID Fee in an identifiable City-owned escrow account that contains the full amount of the City PID Fee (the "City PID Fee Account") for a particular Phase of Development and shall provide proof of such deposit to the City on the date Assessments are levied for such Phase or a subsequent date that is no later than the 30th day after the closing date of the PID Bonds for such Phase of Development. No Party shall withdraw from or otherwise reduce or in any manner encumber the amount deposited into the City PID Fee Account for any Phase of Development until such time as the City Constructed Sewer Improvements necessary to provide sewer service to such Phase have been completed. Upon the completion of the City Completed Sewer Improvements for the applicable Phase, the City may withdraw the full amount in the City PID Fee Account and utilize same for any municipal purpose. The City PID Fee shall be calculated in accordance with the City PID

Policy and shall be based upon the number of single-family residential lots included within the applicable Phase of Development that are being assessed. For the avoidance of doubt, the "single-family residential lot" shall include any townhome (whether attached or detached) located in the PID. The amount of the City PID Fee shall not increase and the City PID Fee shall not be reimbursable from Assessments, PID Bond Proceeds or the TIRZ.

5.22 Rental Property. It is a material breach of this Agreement if a Party knowingly sells—in any single transaction or combination of transactions—a total of more than five percent (5%) of the total number of single-family detached lots projected to be within the Project to one or more Institutional Investors that intend to own and rent or lease single-family residences within the Project.

SECTION 6
PID BONDS

6.1 PID Bond Issuance. Subject to the satisfaction of conditions set forth in this section, the City may issue PID Bonds solely for the purposes of acquiring or constructing PID Projects. Either of the Developers may request issuance of PID Bonds by filing with the City a list of the PID Projects within their property to be funded with the PID Bonds and the estimated costs of such PID Projects. Developers acknowledge that the City may require at that time a professional services agreement that obligates the applicable Developer to fund the costs of the City's professionals relating to the preparation for and issuance of PID Bonds, which amount shall be agreed to by the Parties and considered a cost payable from such PID Bonds. The issuance of PID Bonds is subject to the following conditions:

(a) The City has determined that (a) there will be no negative impact on the City's creditworthiness, bond rating, access to or cost of capital, or potential for liability and (b) the PID Bonds assessment level, structure, terms, conditions and timing of the issuance of the PID Bonds are reasonable for the PID Projects Costs to be financed and that there is sufficient security for the PID Bonds to be creditworthy.

(b) All costs incurred by the City that are associated with the administration of the PID shall be paid out of special assessment revenue levied against property within the PID. City administration costs shall include without limitation those associated with continuing disclosure, compliance with federal tax law, agent fees, staff time, regulatory reporting and legal and financial reporting requirements.

(c) The adoption of a Service and Assessment Plan and an Assessment Ordinance levying assessments on all or any portion of the PID benefitted by such PID Projects in amounts sufficient to pay all costs related to such PID Bonds.

(d) Unless otherwise agreed to by the City, the aggregate principal amount of PID Bonds issued and to be issued shall be estimated to be $300,000,000.

(e) If requested by the City, delivery of an Independent Appraisal to the City confirming that the special benefits conferred on the properties being assessed for the PID Projects increase the value of the property by an amount at least equal to the amount assessed against such property.

(f) Approval by the Texas Attorney General of the PID Bonds and registration of the PID Bonds by the Comptroller of Public Accounts of the State of Texas.

(g) The applicable Developer is current on all taxes, assessments, fees and obligations to the City including without limitation payment of Assessments.

(h) The applicable Developer is not in material default under this Agreement or any other agreement with the City.

(i) No outstanding PID Bonds are in default and no reserve funds established for outstanding PID Bonds have been drawn upon that have not been replenished.

(j) The Administrator has certified that the specified portions of the costs of the PID Projects to be paid from the proceeds of the PID Bonds are eligible to be paid with the proceeds of such PID Bonds; therewith, such approval not to be unreasonably withheld, conditioned or delayed upon presentation of a certificate in compliance with the applicable Indenture.

(k) The PID Projects to be financed by the PID Bonds have been or will be constructed according to the approved Development Standards imposed by this Agreement including without limitation any applicable Governing Regulations and/or City Regulations.

(l) The maximum maturity for each issuance of PID Bonds shall not exceed 30 fiscal years from the date of delivery thereof.

(m) The final maturity for any PID Bonds shall be not later than 50 years from the Effective Date.

(n) The City has determined that the PID Bonds meet all regulatory and legal requirements applicable to the issuance of the PID Bonds.

(o) If the applicable portion of PID Projects has not already been constructed and to the extent PID Bond Proceeds are insufficient to fund such PID Projects Cost, plus private costs to reach final lot completion, the City may require the applicable Developer to, at time of closing the PID Bonds, provide evidence of (i) available funds to the applicable Developer or any corporate parent of the applicable Developer and made available to the Developer, (ii) evidence of financial security from a Lender (as defined herein) of loan funds available under a loan, letter of credit or other credit facility extended to the applicable Developer or any corporate parent of the applicable Developer and made available to the applicable Developer by a financial institution or other lender (a "Lender") for the purpose of development of the Authorized Improvements, equal to or greater than the difference between the PID Projects Costs and the PID Bond Proceeds available to fund such PID Projects Costs plus private costs to reach final lot completion or (iii) a completion agreement; or any combination of (i), (ii) or (iii) in the discretion of the applicable Developer. If the applicable Developer provides evidence of available funds or fiscal security as described in the preceding sentence in connection with a series of PID Bonds, the applicable Developer shall not be required to provide any up-front cash deposit to fund

the applicable PID Projects not otherwise funded through the applicable series of PID Bonds.

(p) No information regarding the City, including without limitation financial information, shall be included in any offering document relating to PID Bonds without the consent of the City.

(q) The applicable Developer agrees to provide periodic information and notices of material events regarding the applicable Developer and the applicable Developer's development of their portion of the Project and any continuing disclosure agreements executed by the applicable Developer in connection with the issuance of PID Bonds.

(r) The applicable Developer is not in default under a Developer Continuing Disclosure Agreement.

(s) The issuance of any Refunding Bonds, the amount of assessment necessary to pay the Refunding Bonds shall not exceed the remaining principal amount of assessments that were levied to pay the PID Bonds that are being refunded.

(t) The gross tax equivalent rate for the annual installments of the Assessments shall not exceed $1.35 per $100.00 of taxable assessed valuation prior to application of the TIRZ Revenue (which maximum total tax equivalent rate shall be measured based on the estimated build out value of the applicable portion of the Property), without prior written consent of the City, in its sole discretion, which written consent may be evidenced by the City's adoption of an Assessment Ordinance without the necessity of amending this Agreement.

(u) The City may not require the value to lien ratio for any PID Bonds to be higher than 2:1; provided that the City may allow for a lesser ratio through the adoption of a resolution, Bond Ordinance, Assessment Ordinance or other applicable council action that authorizes a lesser value to lien ratio without the necessity of amending this Agreement. Any such value-to-lien ratio shall apply solely to the portion of the Assessments securing the PID Bonds.

(v) The applicable Developer and the City shall have entered into a Reimbursement Agreement with respect to the Phase primarily benefitted by such PID Bonds.

(w) The Phase 1 Amenity Center shall be fully completed with the swimming pool having received all required approvals for operation and the building thereon having received a certificate of occupancy for any PID Bonds issued after the second series of PID Bonds.

6.2 Disclosure Information. Prior to the issuance of PID Bonds by the City, the applicable Developer agrees to provide all relevant information, including financial information, that is reasonably necessary in order to provide potential bond investors with a true and accurate offering document for any PID Bonds. The applicable Developer agrees, represents, and warrants

that any information provided by the applicable Developer for inclusion in a disclosure document for an issue of PID Bonds will not, to the applicable Developer's actual knowledge, contain any untrue statement of a material fact or omit any statement of material fact required to be stated therein or necessary to make the statements made therein, in light of the circumstances under which they were made, not misleading, and the applicable Developer further agrees that it will provide a certification to such effect as of the date of the closing of any PID Bonds.

6.3 Tax Certificate. If, in connection with the issuance of the PID Bonds, the City is required to deliver a certificate as to tax exemption (a "Tax Certificate") to satisfy requirements of the United States Internal Revenue Code, the applicable Developer agrees to provide, or cause to be provided, such facts and estimates as the City reasonably considers necessary to enable it to execute and deliver its Tax Certificate. The Developers each represent that such facts and estimates will be based on its reasonable expectations on the date of issuance of the PID Bonds and will be, to the best of the knowledge of the officers of the applicable Developer providing such facts and estimates, true, correct and complete as of such date. To the extent that it exercises control or direction over the use or investment of the PID Bond Proceeds, including, but not limited to, the use of the PID Projects, the Developers further agree that they will not knowingly make, or permit to be made, any use or investment of such funds that would cause any of the covenants or agreements of the City contained in a Tax Certificate to be violated or that would otherwise have an adverse effect on the tax-exempt status of the interest payable on the PID Bonds for federal income tax purposes.

SECTION 7
TAX INCREMENT REINVESTMENT ZONE; CHAPTER 380 GRANTS

7.1 Tax Increment Reinvestment Zone. Prior to the issuance of the first series of PID Bonds, the City will create a TIRZ coterminous with all of the Property. The TIRZ may be divided into zones or subzones for each Phase of development and may be divided into subzones for single-family residential development, which single-family development may include townhome or other attached residential product (a "Single-Family Subzone") and for property containing mixed use development, which mixed use development may include commercial, multi-family or retail development and the like (a "Commercial Subzone"). The base year of any subzone of the TIRZ shall be the year in which the subzone is created. The City agrees to use fifty percent (50%) of the ad valorem tax increment generated by the TIRZ (the "Tax Increment"), for a period of up to forty (40) years for the purposes and in the manner described in this paragraph. The Tax Increment generated within the TIRZ in any Single-Family Subzone shall be used for each Phase (i) first, to pay the Administrative Expenses for the TIRZ and (ii) second to, on a parcel-by-parcel basis, offset or pay a portion of any Assessment levied on assessed parcels for the costs of Authorized Improvements. The Tax Increment generated in any Commercial Subzone shall be placed into a separate account as set forth in the Project and Finance Plan and be used (x) first, to pay the Administrative Expenses for the TIRZ, (y) second to, on a parcel-by-parcel basis, offset or pay a portion of any Assessment levied on assessed parcels in the Commercial Subzone for the costs of Authorized Improvements and (z) third, to the extent such property is not subject to Assessments or all Tax Increment generated by a particular parcel in the Commercial Subzone is not needed to offset Assessments, to pay to the Owner the remaining Tax Increment generated in the Commercial Subzone, in the form of a Chapter 380 Grant for costs of Authorized Improvements not otherwise reimbursed under the terms of this Agreement. The City will enter into a separate Chapter 380

Agreement with the Owner for the Chapter 380 Grant related to the Commercial Subzone upon terms mutually agreeable to the Owner and the City and consistent with this Agreement. The City shall take steps to consider and adopt or approve the TIRZ Documents, including the Project and Finance Plan, necessary to effectuate this Section 7. Any amount of the TIRZ Increment that is not required to be used as set forth in this paragraph may be used by the City for any municipal purpose.

7.2 TIRZ Funds. The Tax Increment obtained from the TIRZ subzones shall be placed into a separate accounts as appropriate and shall be used as described above and the Tax Increment and uses herein shall be incorporated into the Project and Finance Plan.

7.3 Eligible Infrastructure Grant. In consideration of Tellus' agreement to construct certain Authorized Improvements as outlined herein, the City shall enter into a Chapter 380 Agreement (the "Impact Fee 380 Agreement") with Tellus to provide a grant (the "Eligible Infrastructure Grant") to reimburse Tellus for the costs of the Elevated Storage Tank Site and the water, wastewater, roadway, and drainage improvements shown on **Exhibits F-1**, **G**, and **H** (collectively, the "Eligible Infrastructure") in an amount up to the same amount of the total Impact Fees collected from all portions of the Property. The Eligible Infrastructure Grant shall be payable to Tellus on a quarterly basis after the City's approval of the submission of evidence of costs of the Eligible Infrastructure as more particularly described in the Impact Fee 380 Agreement solely from Impact Fees deposited in the Sherley Farms Impact Fee Account in accordance with Section 5.10.

SECTION 8
PAYMENT AND REIMBURSEMENT OF PID PROJECTS

8.1 Payment of Costs of PID Projects. The Parties understand that PID Bond Proceeds and/or the proceeds from Assessments will be used to reimburse the Developers for certain PID Projects Costs related to the PID Projects and, in the event PID Bond Proceeds and/or proceeds from Assessments are not available at the time that all or a portion of the PID Projects are substantially complete and the City is ready to accept said PID Projects or portion thereof, PID Bond Proceeds and/or proceeds from Assessments, once available, will be used to reimburse the applicable Developer for said PID Projects Cost following acceptance by the City. Such reimbursement will be governed by the terms of the Reimbursement Agreement to be entered into between the applicable Developer and the City for the applicable Phase.

8.2 Improvement Account of the Project Fund and Developer Improvement Account. The Improvement Accounts of the Project Fund and the Developer Improvement Account shall be administered and controlled by the City and funds in the Improvement Account of the Project Fund and the Developer Improvement Account shall be deposited and disbursed in accordance with the terms of the respective Indenture.

8.3 Cost Overrun. If the total PID Projects Cost for any Phase of development exceeds the total amount of monies on deposit in the Improvement Account of the Project Fund and the Developer Improvement Account (a "Cost Overrun"), the applicable Developer shall be solely responsible for the Cost Overrun, except as provided in Section 8.4.

8.4 Cost Underrun. If, upon the completion of construction of an PID Project (or segment or section thereof) and payment or reimbursement for such PID Project (or segments or section thereof), there are Cost Underruns, any remaining Budgeted Cost(s) may be available to pay Cost Overruns on any other PID Project without amending the SAP. The elimination of a category of PID Projects as set forth in the Service and Assessment Plan will require an amendment to the SAP. Prior to the completion of all of the PID Projects within an improvement category, as listed in the applicable SAP and the PID, funds available from an improvement category may be used as Cost Underruns and applied to another Improvement category without approval of the City. If, upon completion of the PID Projects in any improvement category, there are funds remaining in any improvement categories, those funds can then be used to reimburse the applicable Developer for any qualifying costs of the PID Projects that have not been previously paid.

SECTION 9
ANNEXATION AND POST-ANNEXATION MATTERS

9.1 Annexation.

(a) Annexation. Within sixty (60) days after the Effective Date of this Agreement, Owner, Tellus (to the extent Tellus owns any portion of the Property), and any other owner(s) of any part of the Property shall submit a voluntary irrevocable petition for annexation of the Property to the City in compliance with Chapter 43, Texas Local Government Code, or other applicable law, as amended (an "Annexation Petition"). Owner, Tellus (to the extent Tellus owns any portion of the Property), and any other owner(s) of any part of the Property agree to execute and supply any and all instruments and/or other documentation necessary for the City to legally annex the Property. The City shall, in accordance with applicable statutory requirements, take all steps necessary to complete the annexation of the Property within sixty (60) days following submission of the Annexation Petition. Should the City fail to complete the annexation of the Property in accordance with this Agreement, Owner and Tellus shall each have the right to terminate this Agreement with respect to Property owned by Owner or Tellus with written notice to the City and, upon such termination, the applicable portion of the Property shall be immune to involuntary annexation by the City for a period of thirty (30) years thereafter regardless of any change of law, and the City shall be subject to the provisions of subsection (c) herein for creation of a municipal utility district. The City shall, subject to Section 9.1(b) in accordance with applicable statutory requirements, take all steps necessary to complete the annexation of the Property immediately prior to any ordinance adopting the PD Zoning.

(b) Zoning. As soon as is practicable, after or in conjunction with the annexation of the Property, the City shall consider planned development zoning for the Property consistent with the Development Standards, the Illustrative Layout, and this Agreement (the "PD Zoning"). The Parties agree that the Illustrative Layout attached hereto as **Exhibit C**, the Development Standards attached hereto as **Exhibit D**, together with the City Regulations, and the applicable provisions of this Agreement memorialize the approved plan for development of the Property as of the Effective Date. Through this Agreement, Owner and Tellus expressly consent and agree to the PD Zoning of the Property. Any such zoning of the Property shall otherwise be in accordance with all procedures set forth in the applicable City Regulations. Should the City Council fail—within 60 days after submittal of a complete and sufficient zoning application—to approve the PD Zoning, or approves zoning on the Property that is in any way more restrictive

than the PD Zoning without the consent of Owner and Tellus, then Owner and Tellus shall each have the right to (i) petition for disannexation of their applicable portion of the Property upon written request delivered to the City or (ii) terminate this Agreement and petition for disannexation of their applicable portion of the Property with written notice to the City and, in the event Owner and Tellus exercise the rights in (i) or (ii), and upon receipt of a request or notice delivered pursuant to (i) or (ii), the City shall disannex the applicable portion of the Property from the City as soon as is practicable, and the applicable portion of the Property shall be immune to involuntary annexation by the City for a period of thirty (30) years thereafter regardless of any change of law and the City shall be subject to the provisions of subsection (c) below for creation of a municipal utility district. Notwithstanding the foregoing or any other provision of this Agreement, the failure of Owner and Tellus to submit a zoning application that complies with all provisions of the Zoning Ordinance applicable to the submittal of a zoning application shall be deemed a failure to submit a complete and sufficient zoning application, provided that the City provides notice within forty-five (45) days of such a submittal stating each deficiency that Owner and Tellus shall be required to cure in order for such zoning application be processed and considered for approval.

(c) Disannexation; Creation of Municipal Utility District. In the event that (i) the City defaults under (a) or (b) of this Section 9.1 or (ii) PID Bonds for a particular Phase of the Project are not issued as a result of any act or omission of the City, including the City's refusal to issue such PID Bonds, and a period of ninety (90) days to cure such non-occurrence has passed after the applicable Developer provides written notice of such non-occurrence or default under this Section 9.1, then (a) the City shall—if the applicable Developer petitions for disannexation—disannex the Property for the applicable Developer or the applicable portion of the Property for which PID Bonds have not been issued (in the case of a failure under item (ii) of this Section 9.1(c) within thirty (30) days of the filing of the disannexation petition by the applicable Developer and such property shall thereafter be immune to involuntary annexation by the City for a period of thirty (30) years and (b) the applicable Developer shall provide notice to the City of its intent to form a municipal utility district or similar utility or improvement district created by special act of the Texas Legislature or the TCEQ or, if necessary, any other agency with jurisdiction (a "MUD") on the portion of the Property disannexed pursuant to this paragraph and, upon such notice, the City shall be deemed to have consented to the formation of the MUD with no further action of the City or City Council required; provided that the City shall take any necessary steps or provide any documents necessary to evidence the City's consent to the creation of the MUD to the TCEQ, the Texas Attorney General or other agency or body with regulatory powers over the MUD. If PID Bonds have been issued for prior Phases of the PID or assessments been levied, those Phases shall remain within the limits of City. For the avoidance of doubt and notwithstanding the foregoing or any other provision of this Agreement, this paragraph shall not apply with respect to a failure under item (ii) above and disannexation shall not be required with respect to item (ii) above in the event that PID Bonds for a particular Phase of the Project are not issued by the City because the conditions and requirements set forth in Section 6.1 that are in the reasonable control of the applicable Developer, which provisions shall solely include items (g), (h), (k), (o), (q), (r), and (w) set forth under Section 6.1, and in Section 6.2 have not been satisfied by the applicable Developer. Other than as provided in Section 9.1, Developers waive the right to file a petition or otherwise seek removal of any portion of the Property from the City unless and only to the extent the City is required to disannex any part of the Property under this paragraph.

(d) Survival. In the event Owner or Tellus terminates this Agreement with respect to a portion of the Property in accordance with this Section 9, Owner's and Tellus' respective rights and remedies under this section, including disannexation and the applicable portion of the Property's immunity to future involuntary annexation, shall survive such termination.

(e) Agreement for Services. Pursuant to Section 43.0672, Texas Local Government Code, this Agreement shall constitute an agreement for the provision of services to the Property and, except as expressly provided otherwise herein, the City shall, immediately upon the effective date of any annexation, provide the Property with all those municipal services currently offered within the City, including those which may be offered in the future, without discrimination. The Developers are not required to enter into this Agreement and do so in reliance upon the representations and covenants of the City herein. The annexation procedures described in plain language in this Agreement require the Developers' consent. The Parties acknowledge and agree that—prior to the Effective Date—the City fully satisfied the written disclosure requirements under Section 212.172(b-1) of the Texas Local Government Code.

SECTION 10
EVENTS OF DEFAULT; REMEDIES

10.1 Events of Default. No Party shall be in default under this Agreement until notice of the alleged failure of such Party to perform has been given in writing (which notice shall set forth in reasonable detail the nature of the alleged failure) and until such Party has been given a reasonable time to cure the alleged failure (such reasonable time to be determined based on the nature of the alleged failure, but in no event more than thirty (30) days (or any longer time period to the extent expressly stated in this Agreement as relates to a specific failure to perform) after written notice of the alleged failure has been given. Notwithstanding the foregoing, no Party shall be in default under this Agreement if, within the applicable cure period, the Party to whom the notice was given begins performance and thereafter diligently and continuously pursues performance until the alleged failure has been cured. Notwithstanding the foregoing, however, a Party shall be in default of its obligation to make any payment required under this Agreement if such payment is not made within twenty (20) business days after it is due.

10.2 Remedies. As compensation for the other party's default, an aggrieved Party is limited to seeking specific performance of the other party's obligations under this Agreement.

10.3 Performance Window; Election to Terminate. In the event a Developer does not deliver a request on or before December 31, 2028 that the City issue the initial series of PID Bonds, and Tellus and Owner have not delivered notice of an assignment of Tellus' rights and obligations under this Agreement in accordance with Section 11.1 within 60 days prior to such date, none of the Parties hereto shall thereafter be required to perform under this Agreement and this Agreement will terminate. If this Agreement is terminated under this Section 10.3, if a PID has been created, the owner of the applicable Property must within thirty (30) days of such termination file or caused to be filed with the City an irrevocable petition by the owners of the applicable Property to dissolve the PID and shall thereafter promptly undertake any and all reasonable and necessary actions to facilitate the dissolution of the PID. Notwithstanding any provision of this Agreement, the obligations of any owner of Property regarding the dissolution of the PID in accordance with this

Section 10.3 shall survive the termination of this Agreement.

SECTION 11
ASSIGNMENT; ENCUMBRANCE

11.1 Assignment. This Agreement shall be binding upon and inure to the benefit of the successors and assigns of the Parties hereto. The obligations, requirements, or covenants to develop the Property subject to this Agreement shall be assignable, in whole or in part, by Owner (with respect to any portion of the Property owned by Owner) or Tellus (with respect to any portion of the Property owned by Tellus), with the prior written consent of the City. The City's consent to such assignment shall not be unreasonably shall not be unreasonably withheld, conditioned, or delayed. Under no circumstances shall any part of this Agreement be assigned to an Institutional Investor. Notwithstanding the foregoing, the Owner (with respect to any portion of the Property owned by Owner) or Tellus has the right (with respect to any portion of the Property owned by Tellus) from time to time, without the consent of but with written notice to the City, to assign this Agreement in whole or in part to (i) any person or entity that is or will become an owner of any portion of the Property, to the extent of such assignee's ownership of the Property (or portion thereof), (ii) any entity formed in which the Owner or Tellus or any principal of the Owner or Tellus retains an ownership interest of at least fifty-one percent (51%), any subsidiary of the Owner or Tellus, or any entity that is under common control with or controlled by the Owner or Tellus, or (iii) any lien holder on the Property. An assignee shall be considered a "Party" for the purposes of this Agreement. Each assignment shall be in writing executed by the Owner or Tellus, as applicable, and the assignee and shall obligate the assignee to be bound by this Agreement to the extent this Agreement applies or relates to the obligations, rights, title, or interests being assigned. No assignment by the Owner or Tellus shall release the Owner or Tellus, as applicable, from any liability that resulted from an act or omission by such Party that occurred prior to the effective date of the assignment unless the City approves the release in writing. The Owner and Tellus shall maintain written records of all assignments made by the Owner or Tellus, respectively, to assignees, including a copy of each executed assignment and, upon written request from any Party or assignee, shall provide a copy of such records to the requesting person or entity, and this obligation shall survive the assigning Party's sale, assignment, transfer, or other conveyance of any interest in this Agreement or the Property.

11.2 Assignees as Parties. An Assignee authorized in accordance with this Agreement and for which notice of assignment has been provided in accordance herewith shall be considered a "Party" for the purposes of this Agreement. With the exception of: (a) the City, (b) an End User, (c) a purchaser of a Fully Developed and Improved Lot, and (d) the Owner (which shall have the obligations described herein), any person or entity upon becoming an owner of land within the PID or upon obtaining an ownership interest in any part of the Property shall be deemed to be a "Developer" and have all of the rights and obligations of a Developer with respect to such part of the Property as set forth in this Agreement and all related documents to the extent of said ownership or ownership interest.

11.3 Third Party Beneficiaries. Except as otherwise provided herein, this Agreement inures to the benefit of, and may only be enforced by, the Parties. No other person or entity shall have any right, title, or interest under this Agreement or otherwise be deemed to be a third-party beneficiary of this Agreement.

11.4 Notice of Assignment. Subject to Section 11.1 of this Agreement, the following requirements shall apply in the event that the Owner sells, assigns, transfers, or otherwise conveys the Property or any part thereof and/or any of its rights or benefits under this Agreement: (i) the Owner must provide written notice to the City to the extent required under Section 11.1; (ii) said notice must describe the extent to which any rights or benefits under this Agreement will be sold, assigned, transferred, or otherwise conveyed; (iii) said notice must state the name, mailing address, telephone contact information, and, if known, email address, of the person(s) that will acquire any rights or benefits as a result of any such sale, assignment, transfer or other conveyance; and (iv) said notice must be signed by a duly authorized person representing the applicable Owner and a duly authorized representative of the person that will acquire any rights or benefits as a result of the sale, assignment, transfer or other conveyance.

SECTION 12
GENERAL PROVISIONS

12.1 Recitals. The recitals contained in this Agreement: (a) are true and correct as of the Effective Date; (b) form the basis upon which the Parties negotiated and entered into this Agreement; (c) reflect the final intent of the Parties with regard to the subject matter of this Agreement; and (d) are fully incorporated into this Agreement for all purposes. In the event it becomes necessary to interpret any provision of this Agreement, the intent of the Parties, as evidenced by the recitals, shall be taken into consideration and, to the maximum extent possible, given full effect. The Parties have relied upon the recitals as part of the consideration for entering into this Agreement and, but for the intent of the Parties reflected by the recitals, would not have entered into this Agreement.

12.2 Acknowledgments. In negotiating and entering into this Agreement, the Parties respectively acknowledge and understand that:

(a) The Developers' obligations hereunder are primarily for the benefit of the Property;

(b) the improvements to be constructed and the open space dedications and donations of real property that the Developers are obligated to set aside and/or dedicate under this Agreement will benefit the Project by positively contributing to the enhanced nature thereof, increasing property values within the Project, and encouraging investment in and the ultimate development of the Project;

(c) the Developers' consent and acceptance of this Agreement is not an exaction or a concession demanded by the City, but is an undertaking of Developers' voluntary design to ensure consistency, quality, and adequate public improvements that will benefit the Property;

(d) the Public Infrastructure will benefit the City and promote state and local economic development, stimulate business and commercial activity in the City for the development and diversification of the economy of the state, promote the development and expansion of commerce in the state, and reduce unemployment or underemployment in the state;

(e) nothing contained in this Agreement shall be construed as creating or intended to create a contractual obligation that controls, waives, or supplants the City Council's legislative discretion or functions with respect to any matters not specifically addressed in this Agreement; and

(f) this Agreement is a development agreement under Section 212.172, Texas Local Government Code.

12.3 Binding Obligations. This Agreement and all amendments thereto and assignments hereof shall be recorded in the Real Property Records. This Agreement binds and constitutes a covenant running with the Property and, upon the Effective Date, is binding upon the Owner, Tellus and the City, and forms a part of any other requirements for development within the Property. This Agreement, when recorded, shall be binding upon the Parties and their successors and assigns as permitted by this Agreement and upon the Property; however, this Agreement shall not be binding upon, and shall not constitute any encumbrance to title as to, any End User of a Fully Developed and Improved Lot except for land use and development regulations that apply to such Fully Developed and Improved Lot.

12.4 Complete Agreement. This Agreement embodies the entire Agreement between the Parties and cannot be varied or terminated except as set forth in this Agreement, or by written agreement of the Parties expressly amending the terms of this Agreement.

12.5 Consideration. This Agreement is executed by the Parties hereto without coercion or duress and for substantial consideration, the sufficiency of which is hereby acknowledged.

12.6 Term. Unless otherwise extended by mutual agreement of the Parties, the term of this Agreement shall be until the later of (i) thirty (30) years from the Effective Date or (ii) the final maturity of PID Bonds sold in accordance with this Agreement (the "Original Term"). Upon expiration of the Original Term, the City shall have no obligations under this Agreement with the exception of maintaining and operating the PID in accordance with the SAP and the Indenture, and the Developers' obligations shall terminate.

12.7 INDEMNIFICATION AND HOLD HARMLESS. TELLUS AND THE OWNER, RESPECTIVELY, INCLUDING THEIR RESPECTIVE SUCCESSORS AND ASSIGNS, HEREBY COVENANT AND AGREE TO RELEASE, DEFEND, HOLD HARMLESS, AND INDEMNIFY THE CITY AND ITS OFFICIALS, OFFICERS, AGENTS, REPRESENTATIVES, SERVANTS AND EMPLOYEES (COLLECTIVELY, THE "RELEASED PARTIES"), FROM AND AGAINST ALL THIRD-PARTY CLAIMS, SUITS, JUDGMENTS, DAMAGES, AND DEMANDS AGAINST THE CITY OR ANY OF THE RELEASED PARTIES, WHETHER REAL OR ASSERTED INCLUDING WITHOUT LIMITATION REASONABLE ATTORNEY'S FEES, RELATED EXPENSES, EXPERT WITNESS FEES, CONSULTANT FEES, AND OTHER COSTS, ARISING OUT OF THE NEGLIGENCE OR OTHER WRONGFUL CONDUCT OF TELLUS OR OWNER, INCLUDING THE NEGLIGENCE OF ITS RESPECTIVE EMPLOYEES, CONTRACTORS, SUBCONTRACTORS, MATERIAL MEN, AND/OR AGENTS, IN CONNECTION WITH THE DESIGN OR CONSTRUCTION OF ANY PUBLIC INFRASTRUCTURE, STRUCTURES, OR OTHER FACILITIES OR IMPROVEMENTS THAT ARE REQUIRED OR PERMITTED UNDER THIS AGREEMENT

(TOGETHER, "CLAIMS"); PROVIDED THAT SUCH INDEMNIFICATION SHALL BE SEVERAL AND PROVIDED BY THE OWNER AND TELLUS SOLELY FOR THE RESPECTIVE PUBLIC INFRASTRUCTURE INSTALLED BY EACH AND IN NO EVENT SHALL THE OWNER BE REQUIRED TO INDEMNIFY TELLUS FOR CLAIMS MADE UNDER THIS AGREEMENT: **AND IT IS EXPRESSLY UNDERSTOOD THAT SUCH CLAIMS SHALL, EXCEPT AS MODIFIED BELOW, INCLUDE CLAIMS EVEN IF CAUSED BY THE CITY'S OWN CONCURRENT NEGLIGENCE SUBJECT TO THE TERMS OF THIS SECTION. TELLUS AND OWNER SHALL NOT, HOWEVER, BE REQUIRED TO INDEMNIFY THE CITY AGAINST CLAIMS CAUSED BY THE CITY'S SOLE NEGLIGENCE, GROSS NEGLIGENCE OR WILLFUL MISCONDUCT.** IF THE CITY INCURS CLAIMS THAT ARE CAUSED BY THE CONCURRENT NEGLIGENCE OF TELLUS OR OWNER, AS APPLICABLE, AND THE CITY, TELLUS' OR OWNER'S RESPECTIVE INDEMNITY OBLIGATION WILL BE LIMITED TO A FRACTION OF THE TOTAL CLAIMS EQUIVALENT TO TELLUS' OR OWNER'S, AS APPLICABLE, OWN PERCENTAGE OF RESPONSIBILITY. TELLUS AND OWNER, RESPECTIVELY, INCLUDING THEIR RESPECTIVE SUCCESSORS AND ASSIGNS, FURTHER COVENANT AND AGREE TO RELEASE, DEFEND, HOLD HARMLESS, AND INDEMNIFY, THE CITY AGAINST ANY AND ALL CLAIMS BY ANY PERSON CLAIMING AN OWNERSHIP INTEREST IN THE PROPERTY OWNED BY THE OWNER OR TELLUS , AS APPLICABLE, PRIOR TO THE EFFECTIVE DATE WHO HAS NOT SIGNED THIS AGREEMENT IF SUCH CLAIMS RELATE IN ANY MANNER OR ARISE IN CONNECTION WITH: (1) THE CITY'S RELIANCE UPON TELLUS' OR OWNER'S RESPECTIVE REPRESENTATIONS IN THIS AGREEMENT; (2) THIS AGREEMENT OR OWNERSHIP OF THE PROPERTY; OR (3) THE CITY'S APPROVAL OF ANY TYPE OF DEVELOPMENT APPLICATION OR SUBMISSION WITH RESPECT TO THE PROPERTY; PROVIDED THAT THE INDEMNITY PROVIDED BY THE OWNER OR TELLUS WITH RESPECT TO SUCH CLAIMS SHALL SOLELY BE FOR THEIR RESPCTIVE PORTIONS OF THE PROPERTY.

12.8 Status of Parties. At no time shall the City have any control over or charge/supervision of Tellus' or Owner's design, construction, installation or other work related to any of the Public Infrastructure, nor the means, methods, techniques, sequences, or procedures utilized for said design, construction, installation or other work. This Agreement does not create a joint enterprise or venture or employment relationship between the City, the Owner and Tellus.

12.9 Payee Information. With respect to any and every type of payment/remittance due to be paid at any time by the City to a Party hereto after the Effective Date under this Agreement, the name and delivery address of the payee for such payment shall be the notice address applicable to such party set forth in Section 12.10. Any Party to receive such payments/remittance may change the name of the payee and/or address by delivering written notice to the City designating a new payee and/or address or through an assignment of such Party's rights hereunder.

12.10 Notices. Any notice, submittal, payment or instrument required or permitted by this Agreement to be given or delivered to any party shall be deemed to have been received (i) if delivered via a method other than e-mail, when delivered personally or upon the expiration of 72 hours following deposit of the same in any United States Post Office, registered or certified mail, postage prepaid or (ii) if delivered via e-mail, upon the earlier of receipt of a "delivery receipt" or on the next Business Day after being sent (as recorded on the device from which the

sender sent the email) unless the sender receives an automated message that the email has not been delivered. Any such notice shall be addressed as follows:

To the City:	City of Anna, Texas Attn: City Manager 120 W. 7th Street Anna, Texas 75409 E-mail: rhenderson@annatexas.gov
With a copy to:	Wolfe, Tidwell & McCoy, LLP Attn: Clark McCoy 2591 Dallas Parkway, Suite 300 Frisco, Texas 75034 E-mail: cmccoy@wtmlaw.net
And to:	McCall, Parkhurst & Horton L.L.P. Attn: Rodolfo Segura Jr 717 North Harwood, Suite 900 Dallas, Texas 75201 E-mail: rsegura@mphlegal.com
To Tellus:	Tellus Texas III, LLC Attn: Andre Ferrari 5301 Headquarters Dr., Suite 120 Plano, Texas 75024 E-mail: aferrari@tellusgroupllc.com
With copies to:	Locke Lord Attn: Drew Slone 2200 Ross Ave., Suite 2800 Dallas, Texas 75201 E-mail: dslone@lockelord.com Brad Holdbrook Haynes and Boone 2801 N. Harwood Street, Suite 2300 Dallas, TX 75201 E-mail: brad.holdbrook@haynesboone.com Chris Simek 5301 Headquarters Dr., Suite 120 Plano, Texas 75024 E-mail: csimek@tellusgroupllc.com

To Owner:	Sherley Farms, LP Attn: Tasha Escoto P.O. Box 6069 McKinney, Texas 75071 E-mail: tasha@sherleypartnersltd.com
With a copy to:	Tobin Swope Winstead PC 2728 N. Harwood, Suite 500 Dallas, Texas 75201 E-mail: tswope@winstead.com

Any Party may change its address or addresses for delivery of notice by delivering written notice of such change of address to the other Party.

12.11 Estoppel Certificates. From time to time, upon written request of a Developer or Owner under this Agreement, and upon the payment to the City of a $100.00 fee plus all reasonable costs incurred by the City in providing the certificate described in this section, the City Manager, or his/her designee will, in his/her official capacity and to his/her reasonable knowledge and belief, execute a written estoppel certificate identifying any obligations of the respective Owner under this Agreement that are in default.

12.12 Interpretation. Each Party has been actively involved in negotiating and drafting this Agreement. Accordingly, a rule of construction that any ambiguities are to be resolved against the drafting Party will not apply to interpreting this Agreement. In the event of any dispute over the meaning or application of any provision of this Agreement, the provision will be interpreted fairly and reasonably and neither more strongly for nor against any Party, regardless of which Party originally drafted the provision.

12.13 Time. In this Agreement, time is of the essence and compliance with the times for performance herein is required.

12.14 Authority and Enforceability. The City represents and warrants that this Agreement has been approved by official action by the City Council of the City in accordance with all applicable public notice requirements (including, but not limited to, notices required by the Texas Open Meetings Act) and that the individual executing this Agreement on behalf of the City has been duly authorized to do so. The Owner and Tellus respectively represent and warrant that this Agreement has been approved by appropriate action of the Owner and Tellus, respectively, and that each individual executing this Agreement on behalf of the Owner or Tellus has been duly authorized to do so. Each Party respectively acknowledges and agrees that this Agreement is binding upon such Party and is enforceable against such Party, in accordance with its terms and conditions.

12.15 Limited Waiver of Immunity. The Parties are entering into this Agreement in reliance upon its enforceability. Consequently, the City unconditionally and irrevocably waives all claims of sovereign and governmental immunity which it may have (including, but not limited to, immunity from suit and immunity to liability) to the extent, but only to the extent, that a waiver is

necessary to enforce specific performance of this Agreement (including all of the remedies provided under this Agreement) and to give full effect to the intent of the Parties under this Agreement. Notwithstanding the foregoing, the waiver contained herein shall not waive any immunities that the City may have with respect to claims of injury to persons or property, which claims shall be subject to all of their respective immunities and to the provisions of the Texas Tort Claims Act. Further, the waiver of immunity herein is not enforceable by any party not a Party to this Agreement.

12.16 Amendment; Severability. This Agreement shall not be modified or amended except in writing signed by the Parties; provided that any amendment relating to a distinct portion of the Property may be signed solely by the owner of such Property and the City without the requirement of signatures from any other Party hereto and the remaining Parties hereto consent to such amendment. If any provision of this Agreement is determined by a court of competent jurisdiction to be unenforceable for any reason, then: (a) such unenforceable provision shall be deleted from this Agreement; (b) the unenforceable provision shall, to the extent possible and upon mutual agreement of the Parties, be rewritten to be enforceable and to give effect to the intent of the Parties; and (c) the remainder of this Agreement shall remain in full force and effect and shall be interpreted to give effect to the intent of the Parties.

12.17 Applicable Law; Venue. This Agreement is entered into pursuant to and is to be construed and enforced in accordance with the laws of the State of Texas and all obligations of the Parties are performable in Collin County. Exclusive venue for any action related to, arising out of, or brought in connection with this Agreement shall be in a state district court in Collin County.

12.18 Non Waiver. Any failure by a Party to insist upon performance by the other Party of any material provision of this Agreement shall not be deemed a waiver thereof, and the Party shall have the right at any time thereafter to insist upon strict performance of any and all provisions of this Agreement. No provision of this Agreement may be waived except by writing signed by the Party waiving such provision. Any waiver shall be limited to the specific purposes for which it is given. No waiver by any Party of any term or condition of this Agreement shall be deemed or construed to be a waiver of any other term or condition or subsequent waiver of the same term or condition.

12.19 Force Majeure. Each Party shall use good faith, due diligence and reasonable care in the performance of its respective obligations under this Agreement, and time shall be of the essence in such performance; however, in the event a Party is unable, due to force majeure, to perform its obligations under this Agreement, then the obligations affected by the force majeure shall be temporarily suspended. Within ten (10) business days after the occurrence of a force majeure, the Party claiming the right to temporarily suspend its performance, shall give written notice to all the Parties, including a detailed explanation of the force majeure and a description of the action that will be taken to remedy the force majeure and resume full performance at the earliest possible time. The term "force majeure" shall include events or circumstances that are not within the reasonable control of the Party whose performance is suspended and that could not have been avoided by such Party with the good faith exercise of good faith, due diligence and reasonable care. A Party that has claimed the right to temporarily suspend its performance under this section shall provide written reports to the other Party at least once every week detailing: (i) the extent to which the force majeure event or circumstance continues to prevent the Party's performance; (ii)

all of the measures being employed to regain the ability to fully perform; and (iii) the projected date upon which the Party will be able to resume full performance.

12.20 Statutory Verifications. Each of the Owner and Tellus (each, a "Representing Party") makes the following representations and covenants pursuant to Chapters 2252, 2271, 2274, and 2276, Texas Government Code, as heretofore amended (the "Government Code"), in entering into this Agreement. As used in such verifications, "affiliate" means an entity that controls, is controlled by, or is under common control with the Representing Party within the meaning of SEC Rule 405, 17 C.F.R. § 230.405, and exists to make a profit. Liability for breach of any such verification during the term of this Agreement shall survive until barred by the applicable statute of limitations, and shall not be liquidated or otherwise limited by any provision of this Agreement, notwithstanding anything in this Agreement to the contrary.

a. Not a Sanctioned Company. Each Representing Party respectively represents that neither it nor any of its parent company, wholly- or majority-owned subsidiaries, and other affiliates is a company identified on a list prepared and maintained by the Texas Comptroller of Public Accounts under Section 2252.153 or Section 2270.0201, Government Code. The foregoing representation excludes any Representing Party and each of its parent company, wholly- or majority-owned subsidiaries, and other affiliates, if any, that the United States government has affirmatively declared to be excluded from its federal sanctions regime relating to Sudan or Iran or any federal sanctions regime relating to a foreign terrorist organization.

b. No Boycott of Israel. Each Representing Party respectively hereby verifies that it and its parent company, wholly- or majority-owned subsidiaries, and other affiliates, if any, do not boycott Israel and will not boycott Israel during the term of this Agreement. As used in the foregoing verification, "boycott Israel" has the meaning provided in Section 2271.001, Government Code.

c. No Discrimination Against Firearm Entities. Each Representing Party respectively hereby verifies that it and its parent company, wholly- or majority-owned subsidiaries, and other affiliates, if any, do not have a practice, policy, guidance, or directive that discriminates against a firearm entity or firearm trade association and will not discriminate against a firearm entity or firearm trade association during the term of this Agreement. As used in the foregoing verification, "discriminate against a firearm entity or firearm trade association" has the meaning provided in Section 2274.001(3), Government Code.

d. No Boycott of Energy Companies. Each Representing Party respectively hereby verifies that it and its parent company, wholly- or majority-owned subsidiaries, and other affiliates, if any, do not boycott energy companies and will not boycott energy companies during the term of this Agreement. As used in the foregoing verification, "boycott energy companies" has the meaning provided in Section 2276.001(1), Government Code.

12.21 Form 1295. Submitted herewith is a completed Form 1295 in connection with the participation of the Owner and Tellus to the extent each constitutes a "business entity" for the

purposes of Section 2252.908 of the Texas Government Code in the execution of this Agreement generated by the Texas Ethics Commission's (the "TEC") electronic filing application in accordance with the provisions of Section 2252.908 of the Texas Government Code and the rules promulgated by the TEC (the "Form 1295"). The City hereby confirms receipt of the Form 1295 from the Owner and Tellus to the extent that each constitutes a "business entity" for the purposes of Section 2252.908 of the Texas Government Code, and the City agrees to acknowledge such form with the TEC through its electronic filing application not later than the 30th day after the receipt of such form. The Owner, Tellus and the City understand and agree that, with the exception of information identifying the City and the contract identification number, neither the City nor its consultants are responsible for the information contained in the Form 1295; that the information contained in the Form 1295 has been provided solely by the Owner and Tellus; and, neither the City nor its consultants have verified such information.

12.22 Counterparts. This Agreement may be executed in any number of counterparts, each of which shall be deemed an original and constitute one and the same instrument.

12.23 Exhibits. The following exhibits are attached to this Agreement and are incorporated herein for all purposes:

Exhibit A	Metes and Bounds Description of the Property
Exhibit B	Depiction of the Property
Exhibit C	Illustrative Layout
Exhibit D	Development Standards
Exhibit E	Authorized Improvements and Budgeted Costs
Exhibit F-1	Major Sewer Improvements
Exhibit F-2	City Constructed Sewer Improvements
Exhibit F-3	Sewer Improvements Schedule
Exhibit G	Major Water Improvements
Exhibit H	Major Roadway Improvements
Exhibit H-1	Proposed Thoroughfare Plan Revision
Exhibit I	Conceptual Amenity Depictions
Exhibit J	Trail and Open Space Improvements
Exhibit K	PID Bonds Financial Summary

[SIGNATURES PAGES AND EXHIBITS FOLLOW]

EXECUTED BY THE PARTIES TO BE EFFECTIVE ON THE EFFECTIVE DATE:

CITY OF ANNA, TEXAS

By: _____
Name: Pete Cain
Title: Mayor
Date: 12/17/24

STATE OF TEXAS §
COUNTY OF COLLIN §

This instrument was acknowledged before me on this 17 day of December 2024, by Pete Cain, Mayor of the City of Anna, Texas, on behalf of said City.

CARRIE L. LAND
Notary Public, State of Texas
Comm. Expires 02-04-2027
Notary ID 11419404

_____
Notary Public, State of Texas

[SEAL]

Approved as to form:

_____
Clark McCoy, City Attorney

OWNER:

SHERLEY PARTNERS, LTD.,
a Texas limited partnership

By: TT Sherley LLC,
a Texas limited liability company, its
General Partner

By: _____
Tasha Escoto, its manager

STATE OF TEXAS §
COUNTY OF Collin §

This instrument was acknowledged before me, on this 11 day of December, 2024, by Tasha Escoto, in her capacity as manager of TT Sherley LLC, a Texas limited liability company in its capacity as general partner of Sherley Partners, Ltd., on behalf of said limited partnership.

[S E A L]

_____
Notary Public, State of Texas

STACEY CAMPOS
Notary Public, State of Texas
Comm. Expires 03-27-2027
Notary ID 134273061

TELLUS:

TELLUS TEXAS III, LLC,
a Texas limited liability company

By: Tellus-Anna, LLC, a Texas limited liability company and manager of Tellus Texas III, LLC

By: _____
David Blom, Manager

STATE OF TEXAS §
COUNTY OF Collin §

This instrument was acknowledged before me, on the this 12 day of December, 2024, by David Blom, manager of Tellus-Anna, LLC, in its capacity as manger of Tellus Texas III, LLC, on behalf of said limited liability company.

[S E A L]

COURTNEY L. DUNCAN
Notary Public, State of Texas
Comm. Expires 01-24-2027
Notary ID 134162993

_____
Notary Public, State of Texas

Exhibit A

Metes and Bounds Description of the Property

SHERLEY FARMS SOUTH TRACT
LEGAL DESCRIPTION
970.482 ACRES

BEING a tract of land situated in the G. Morrison Survey, Abstract No. 559, the S. Moore Survey, Abstract No. 625, and the J. Fisher Survey, Abstract No. 305, in Collin County, Texas, being part of Tracts 1.1, 1.2, 1.3, 1.4, all of Tract 1.6, recorded in Volume 4466, Page 153, Deed Records, Collin County, Texas (DRCCT), and part of Tracts 1.1, 1.2, 1.3, and 1.4, recorded in Volume 4466, Page 183 DRCCT, and all of Tract 1.2, recorded in Volume 4466, Page 201 DRCCT, with the subject tract being more particularly described as follows:

BEGINNING at a 1/2" iron rod found on the north line of Farm to Market Road 455, a variable width public right-of-way, for the southeast corner of a tract conveyed to Timothy P. Adams and Patricia S. Adams, recorded in Document No. 20170117000070510, Official Public Records, Collin County, Texas (OPRCCT);

THENCE N 00°40'51" E, along the east line of said Adams tract, passing at 19.16 feet a 5/8" iron rod with plastic cap found for witness, continuing a total distance of 321.14 feet to a 1/2" iron rod found;

THENCE N 01°18'15" E, 307.48 feet continuing along the east line thereof to a 1/2" iron rod with plastic cap found for the southeast corner of a tract conveyed to Wilcox Anna Properties, LLC, recorded in Document No. 20090225000210920 OPRCCT;

THENCE N 01°02'30" E, 904.66 feet along the east line thereof, and of an east line of a tract conveyed to City of Anna recorded in Volume 5961, Page 7136 DRCCT, to a 1/2" iron rod with plastic cap stamped "SPIARSENG" set for the southeast corner of "The Town Farm" First Tract, conveyed to MJLA Adams, Ltd., recorded in Document No. 20110505000462590 OPRCCT;

THENCE N 00°56'20" E, 1597.53 feet along the east line of said MJLA Adams tract to a 1/2" iron rod with plastic cap stamped "SPIARSENG" set for the northeast corner thereof;

THENCE N 87°10'06" W, 281.88 feet along the north line of said MJLA Adams tract to a 3/8" iron rod found for the southeast corner of a tract conveyed to Equity Trust Company Custodian FBO Raj Kakarlapudi IRA and NKS Estates, LLC, recorded in Document No. 20210628001299290 OPRCCT;

THENCE N 02°29'42" E, 2152.51 feet along the east line thereof to a 3/8" iron rod found on the east line of Farm to Market Road 2862, a 90-foot-wide public right-of-way;

THENCE along the east line thereof, around a non-tangent curve to the left having a central angle of 20°03'34", a radius of 363.31 feet, a chord of N 12°39'47" E - 126.55 feet, an arc length of 127.20 feet;

THENCE N 02°38'00" E, 324.15 feet continuing along the east line of said right-of-way to a 1/2" iron rod with plastic cap found for the southwest corner of a tract conveyed to Anna Independent School District, recorded in Volume 5816, Page 2962 DRCCT;

THENCE S 88°36'00" E, 946.63 feet along the south line thereof;

THENCE N 01°24'00" E, 946.63 feet along the east line of said Anna ISD tract to the intersection thereof with the south line of Farm to Market Road 2862;

THENCE along the south line thereof, the following:

S 88°36'00" E, 1840.60 feet;

S 87°35'00" E, 950.82 feet;

S 87°54'00" E, 852.06 feet;

S 88°23'00" E, 1005.18 feet;

And a tangent curve to the left having a central angle of 61°39'58", a radius of 363.31 feet, a chord of N 60°47'01" E - 372.42 feet, an arc length of 391.02 feet to a 1/2" iron rod with plastic cap stamped "SPIARSENG" set for a westerly corner of a tract conveyed to Larry Kropman Bennett and Jill Rae Bennett, recorded in Volume 1718, Page 193 DRCCT, and from which a 5/8" iron rod with plastic cap found bears N 17°37'19" E, 154.65 feet (a chord bearing and distance);

THENCE S 02°42'15" W, 147.06 feet along the west line of said Bennett tract to a 1/2" iron rod with plastic cap stamped "SPIARSENG" set;

THENCE S 88°34'52" E, along the south line of said Bennett tract, passing at 317.47 feet a 3/8" iron rod found for the southwest corner of a tract conveyed to the Nagamanohar Javvaji and Chaya Javvaji Living Trust, recorded in Document No. 20160209000150410 OPRCCT, continuing a total distance of 1164.17 feet to a 1/2" iron rod found for the southeast corner thereof;

THENCE N 01°54'20" W, 404.61 feet along the east line thereof to a 1/2" iron rod with plastic cap found for the southwest corner of a tract conveyed to Jacob Knettel and Alexandra T. Knettel, recorded in Document No. 20160902001176800 OPRCCT;

THENCE N 88°51'58" E, 711.14 feet along the south line thereof to a 1/2" iron rod with plastic cap found for the upper southwest corner of a tract conveyed to Bobby R. Beall and Mary Reloa Beall, Trustees of the Beall Family Living Trust, recorded in Volume 5842, Page 1374 DRCCT;

THENCE N 89°53'22" E, 543.59 feet along the upper south line thereof to a fence post found;

THENCE S 00°43'46" W, 1256.27 feet along a westerly line of said Beall tract to a 1/2" iron rod found for a northwesterly corner of a tract conveyed to JDI Investors, LP, recorded in Document No. 20141016001133750 OPRCCT;

THENCE S 00°27'02" W, 1121.81 feet, generally along a fence and along a westerly line of said JDI tract to a fence post found;

THENCE N 89°10'40" W, 1167.05 feet, generally along a fence and along a southerly line of said JDI tract to a fence post found;

THENCE S 00°10'31" E, 1608.22 feet, generally along a fence and along a westerly line of said JDI tract to a 1/2" iron rod found for the northeast corner of a tract conveyed to WKG Enterprises, Ltd., recorded in Volume 4478, Page 2546 DRCCT;

THENCE N 88°26'32" W, 1013.41 feet along the north line thereof to a 1/2" iron rod found for the northeast corner of a tract conveyed to Miles and Bobbi Martin, recorded in Document No. 20220331000521330 OPRCCT;

THENCE N 88°01'21" W, 524.66 feet along the north line thereof to a 1/2" iron rod with plastic cap stamped "SPIARSENG" set;

THENCE N 87°54'42" W, continuing along the north line of said Martin tract, passing at 261.79 feet a 3/4" iron pipe found for the northeast corner of a tract conveyed to Zen Assets LLC, recorded in Document No. 2022000142528 OPRCCT, and continuing along the north line thereof a total distance of 523.20 feet to a 1/2" iron rod with plastic cap stamped "SPIARSENG" set;

THENCE S 00°57'28" W, 2078.20 feet along the west line thereof to a 1/2" iron rod found for the southwest corner of said Zen Assets tract, being a bend point in County Road 424, a public road;

THENCE S 00°31'42" E, 913.32 feet along said road to a 60d nail found for a bend point thereof;

THENCE N 88°34'43" W, 435.86 feet continuing along said road to a point for the intersection of County Road 424 with the north line of Farm to Market Road 455;

THENCE along the north line of said right-of-way, the following:

N 00°51'24" E, 46.08 feet to a wood highway monument;

N 89°08'36" W, 1080.65 feet to a wood highway monument;

A tangent curve to the left having a central angle of 03°40'00", a radius of 5774.58 feet, a chord of S 89°01'24" W - 369.48 feet, an arc length of 369.55 feet to a 1/2" iron rod with plastic cap stamped "SPIARSENG" set;

N 02°48'36" W, 5.00 feet to a 1/2" iron rod with plastic cap stamped "SPIARSENG" set;

S 87°11'24" W, 1677.79 feet to a 1/2" iron rod with plastic cap stamped "SPIARSENG" set;

S 88°35'24" W, 857.61 feet to a 1/2" iron rod with plastic cap stamped "SPIARSENG" set;

S 87°45'48" W, 346.50 feet to a 1/2" iron rod with plastic cap stamped "SPIARSENG" set;

And S 88°35'24" W, 209.16 feet to the POINT OF BEGINNING with the subject tract containing 42,274,206 square feet or 970.482 acres of land.

SHERLEY FARMS NORTH TRACT
LEGAL DESCRIPTION
153.110 ACRES

BEING a tract of land situated in the J. Farris Survey, Abstract No. 330, and the S. Moore Survey, Abstract No. 625, in Collin County, Texas, being part of Tract 1.7, recorded in Volume 4466, Page 153, Deed Records, Collin County, Texas (DRCCT), and part of Tracts 1.5 and 1.6, recorded in Volume 4466, Page 183 DRCCT, and all of Tract 1.1, recorded in Volume 4466, Page 201 DRCCT, with the subject tract being more particularly described as follows:

BEGINNING at a 1/2" iron rod with plastic cap stamped "SPIARSENG" set on the north line of Farm to Market Road 2862, a called 90-foot-wide right-of-way, for the southeast corner of the "First Tract" conveyed to Daniel W. Koen and Sue Ann Burleson-Koen, recorded in Document No. 93-0107055 DRCCT, from which a 1/2" iron rod found bears N 88°36'00" W, 1326.83 feet;

THENCE N 01°09'20" E, 958.23 feet along the common line thereof to a fence post found for a southwest corner of a tract conveyed to 3Mc Joint Venture, recorded in Volume 3670, Page 174 DRCCT;

THENCE along the common line thereof the following:

S 87°43'06" E, 1297.37 feet to a 1/2" iron rod with plastic cap stamped "SPIARSENG" set;

N 01°31'00" E, 90.36 feet to a point on the bank of a reservoir;

N 01°23'00" E, 892.67 feet to a point on the bank of a reservoir;

N 00°54'00" E, 297.22 feet to a 1/2" iron rod with plastic cap stamped "SPIARSENG" set;

And N 01°19'00" E, passing at 346.16 feet a 1/2" iron rod found for witness, being on the south line of County Road 427, a public road, continuing into said road a total distance of 363.52 feet to a point for corner;

THENCE S 88°36'15" E, 2111.97 feet along said road to a point for corner being the northwest corner of a tract conveyed to Tina Trimbur, recorded in Volume 5570, Page 1829 DRCCT;

THENCE S 01°46'06" W, 515.24 feet along the west line thereof to a 1/2" iron rod found for the northwest corner of a tract conveyed to Todd O'Brien Hannan and Kimberly Michele Hannan, co-trustees of the TKSL Tattoo Revocable Trust, recorded in Document No. 20210422000816440, Official Public Records, Collin County, Texas;

THENCE along the west line thereof, the following:

S 02°08'00" W, 125.96 feet to a 1/2" iron rod with plastic cap stamped "SPIARSENG" set;

S 01°43'00" W, 589.97 feet to a 1/2" iron rod with plastic cap stamped "SPIARSENG" set;

S 01°36'00" W, 319.63 feet to a 1/2" iron rod with plastic cap stamped "SPIARSENG" set;

And S 01°07'00" W, 163.58 feet to a 1/2" iron rod with plastic cap stamped "SPIARSENG" set on the north line of Farm to Market Road 2862, and from which a 1" iron rod found bears S 71°47'28" W, 1.15 feet;

THENCE along the north line of said Farm to Market Road, the following:

A non-tangent curve to the left having a central angle of 29°26'09", a radius of 363.31 feet, a chord of S 15°56'04" W - 184.61 feet, an arc length of 186.65 feet to a 1/2" iron rod with plastic cap stamped "SPIARSENG" set;

S 01°13'00" W, 446.03 feet to a 1/2" iron rod with plastic cap stamped "SPIARSENG" set;

A tangent curve to the right having a central angle of 90°24'00", a radius of 273.31 feet, a chord of S 46°25'00" W - 387.87 feet, an arc length of 431.22 feet to a 1/2" iron rod with plastic cap stamped "SPIARSENG" set;

N 88°23'00" W, 1004.80 feet to a 1/2" iron rod with plastic cap stamped "SPIARSENG" set;

N 87°54'00" W, 851.44 feet to a 1/2" iron rod with plastic cap stamped "SPIARSENG" set;

N 87°35'00" W, 951.37 feet to a 1/2" iron rod with plastic cap stamped "SPIARSENG" set;

And N 88°36'00" W, 266.77 feet to the POINT OF BEGINNING with the subject tract containing 6,669,493 square feet or 153.110 acres of land.

Exhibit B

Depiction of the Property

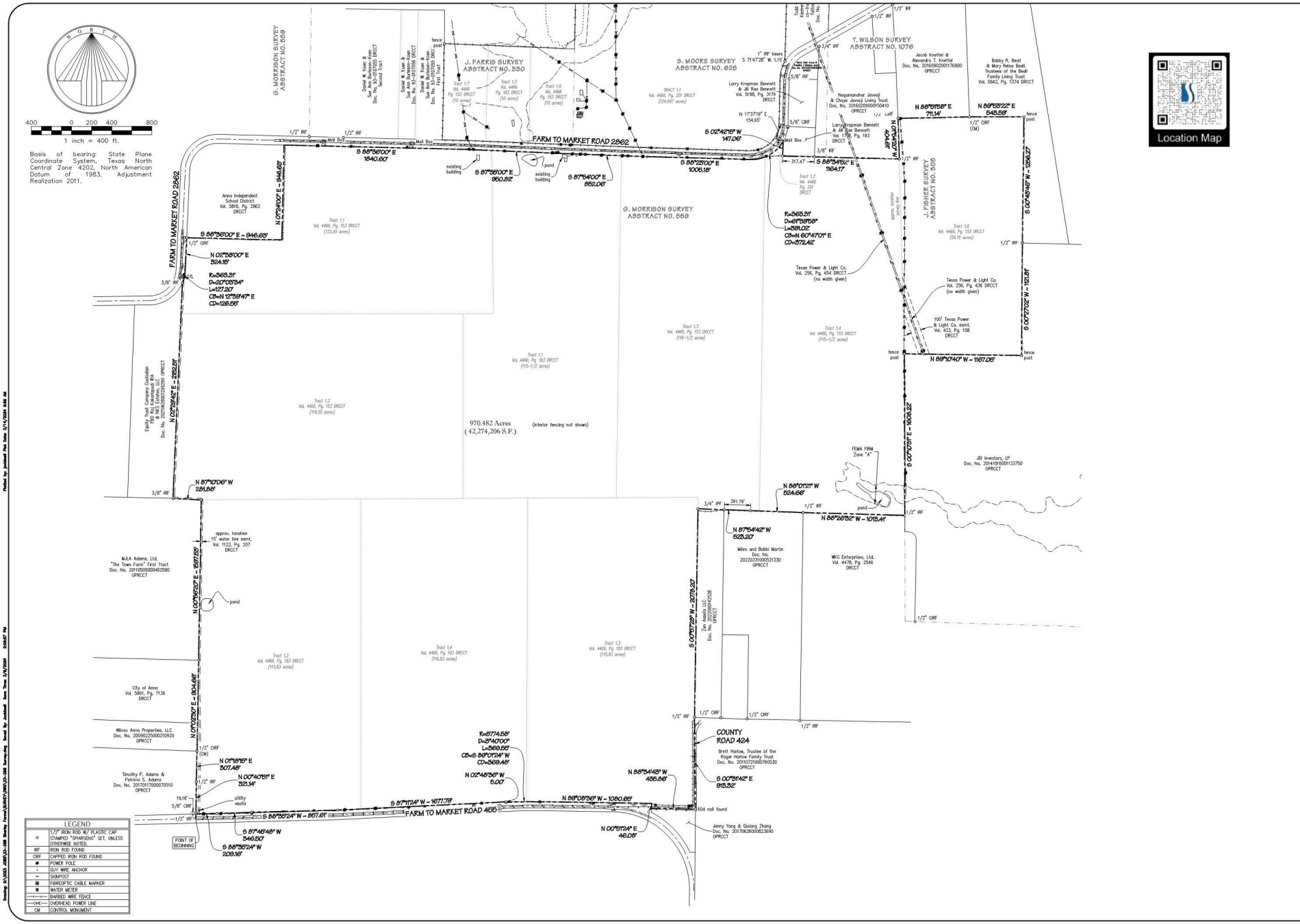

SPIARS ENGINEERING & SURVEYING
765 Custer Road, Suite 100 • Plano, TX 75075 • 972.422.0077
TBPELS No. F-2121 and No. F-10043100 • www.spiarseng.com

website

ALTA/NSPS LAND TITLE SURVEY

COLLIN COUNTY, TEXAS

Sherley Farms

Issue Dates: 1/29/24

Revisions	Date

Scale: 1" = 400'

Drawn By: ED

Checked By: DKB

Sheet 1 of 2

JOB # 23-288

METES AND BOUNDS DESCRIPTION

BEING a tract of land situated in the G. Morrison Survey, Abstract No. 559, the S. Moore Survey, Abstract No. 625, and the J. Fisher Survey, Abstract No. 305, in Collin County, Texas, being part of Tracts 1.1, 1.2, 1.3, 1.4, all of Tract 1.6, recorded in Volume 4466, Page 153, Deed Records, Collin County, Texas (DRCCT), and part of Tracts 1.1, 1.2, 1.3, and 1.4, recorded in Volume 4466, Page 183 DRCCT, and all of Tract 1.2, recorded in Volume 4466, Page 201 DRCCT, with the subject tract being more particularly described as follows:

BEGINNING at a 1/2" iron rod found on the north line of Farm to Market Road 455, a variable width public right-of-way, for the southeast corner of a tract conveyed to Timothy P. Adams and Patricia S. Adams, recorded in Document No. 20170117000070510, Official Public Records, Collin County, Texas (OPRCCT);

THENCE N 00°40'51" E, along the east line of said Adams tract, passing at 19.16 feet a 5/8" iron rod with plastic cap found for witness, continuing a total distance of 321.14 feet to a 1/2" iron rod found;

THENCE N 01°18'15" E, 307.48 feet continuing along the east line thereof to a 1/2" iron rod with plastic cap found for the southeast corner of a tract conveyed to Wilcox Anna Properties, LLC, recorded in Document No. 20090225000210920 OPRCCT;

THENCE N 01°02'30" E, 904.66 feet along the east line thereof, and of an east line of a tract conveyed to City of Anna recorded in Volume 5961, Page 7136 DRCCT, to a 1/2" iron rod with plastic cap stamped "SPIARSENG" set for the southeast corner of "The Town Farm" First Tract, conveyed to MJLA Adams, Ltd., recorded in Document No. 20110505000462590 OPRCCT;

THENCE N 00°56'20" E, 1597.53 feet along the east line of said MJLA Adams tract to a 1/2" iron rod with plastic cap stamped "SPIARSENG" set for the northeast corner thereof;

THENCE N 87°10'06" W, 281.88 feet along the north line of said MJLA Adams tract to a 3/8" iron rod found for the southeast corner of a tract conveyed to Equity Trust Company Custodian FBO Raj Kakarlapudi IRA and NKS Estates, LLC, recorded in Document No. 20210628001299290 OPRCCT;

THENCE N 02°29'42" E, 2152.51 feet along the east line thereof to a 3/8" iron rod found on the east line of Farm to Market Road 2862, a 90-foot-wide public right-of-way;

THENCE along the east line thereof, around a non-tangent curve to the left having a central angle of 20°03'34", a radius of 363.31 feet, a chord of N 12°39'47" E – 126.55 feet, an arc length of 127.20 feet;

THENCE N 02°38'00" E, 324.15 feet continuing along the east line of said right-of-way to a 1/2" iron rod with plastic cap found for the southwest corner of a tract conveyed to Anna Independent School District, recorded in Volume 5816, Page 2962 DRCCT;

THENCE S 88°36'00" E, 946.63 feet along the south line thereof;

THENCE N 01°24'00" E, 946.63 feet along the east line of said Anna ISD tract to the intersection thereof with the south line of Farm to Market Road 2862;

THENCE along the south line thereof, the following:

S 88°36'00" E, 1840.60 feet;

S 87°35'00" E, 950.82 feet;

S 87°54'00" E, 852.06 feet;

S 88°23'00" E, 1005.18 feet;

And a tangent curve to the left having a central angle of 61°39'58", a radius of 363.31 feet, a chord of N 60°47'01" E – 372.42 feet, an arc length of 391.02 feet to a 1/2" iron rod with plastic cap stamped "SPIARSENG" set for a westerly corner of a tract conveyed to Larry Kropman Bennett and Jill Rae Bennett, recorded in Volume 1718, Page 193 DRCCT, and from which a 5/8" iron rod with plastic cap found bears N 17°37'19" E, 154.65 feet (a chord bearing and distance);

THENCE S 02°42'15" W, 147.06 feet along the west line of said Bennett tract to a 1/2" iron rod with plastic cap stamped "SPIARSENG" set;

THENCE S 88°34'52" E, along the south line of said Bennett tract, passing at 317.47 feet a 3/8" iron rod found for the southwest corner of a tract conveyed to the Nagamanohar Javvaji and Chaya Javvaji Living Trust, recorded in Document No. 20160209000150410 OPRCCT, continuing a total distance of 1164.17 feet to a 1/2" iron rod found for the southeast corner thereof;

THENCE N 01°54'20" W, 404.61 feet along the east line thereof to a 1/2" iron rod with plastic cap found for the southwest corner of a tract conveyed to Jacob Knettel and Alexandra T. Knettel, recorded in Document No. 20160902001176800 OPRCCT;

THENCE N 88°51'58" E, 711.14 feet along the south line thereof to a 1/2" iron rod with plastic cap found for the upper southwest corner of a tract conveyed to Bobby R. Beall and Mary Reloa Beall, Trustees of the Beall Family Living Trust, recorded in Volume 5842, Page 1374 DRCCT;

THENCE N 89°53'22" E, 543.59 feet along the upper south line thereof to a fence post found;

THENCE S 00°43'46" W, 1256.27 feet along a westerly line of said Beall tract to a 1/2" iron rod found for a northwesterly corner of a tract conveyed to JDI Investors, LP, recorded in Document No. 20141016001133750 OPRCCT;

THENCE S 00°27'02" W, 1121.81 feet, generally along a fence and along a westerly line of said JDI tract to a fence post found;

THENCE N 89°10'40" W, 1167.05 feet, generally along a fence and along a southerly line of said JDI tract to a fence post found;

THENCE S 00°10'31" E, 1608.22 feet, generally along a fence and along a westerly line of said JDI tract to a 1/2" iron rod found for the northeast corner of a tract conveyed to WKG Enterprises, Ltd., recorded in Volume 4478, Page 2546 DRCCT;

THENCE N 88°26'32" W, 1013.41 feet along the north line thereof to a 1/2" iron rod found for the northeast corner of a tract conveyed to Miles and Bobbi Martin, recorded in Document No. 20220331000521330 OPRCCT;

THENCE N 88°01'21" W, 524.66 feet along the north line thereof to a 1/2" iron rod with plastic cap stamped "SPIARSENG" set;

THENCE N 87°54'42" W, continuing along the north line of said Martin tract, passing at 261.79 feet a 3/4" iron pipe found for the northeast corner of a tract conveyed to Zen Assets LLC, recorded in Document No. 2022000142528 OPRCCT, and continuing along the north line thereof a total distance of 523.20 feet to a 1/2" iron rod with plastic cap stamped "SPIARSENG" set;

THENCE S 00°57'28" W, 2078.20 feet along the west line thereof to a 1/2" iron rod found for the southwest corner of said Zen Assets tract, being a bend point in County Road 424, a public road;

THENCE S 00°31'42" E, 913.32 feet along said road to a 60d nail found for a bend point thereof;

THENCE N 88°34'43" W, 435.86 feet continuing along said road to a point for the intersection of County Road 424 with the north line of Farm to Market Road 455;

THENCE along the north line of said right-of-way, the following:

N 00°51'24" E, 46.08 feet to a wood highway monument;

N 89°08'36" W, 1080.65 feet to a wood highway monument;

A tangent curve to the left having a central angle of 03°40'00", a radius of 5774.58 feet, a chord of S 89°01'24" W – 369.48 feet, an arc length of 369.55 feet to a 1/2" iron rod with plastic cap stamped "SPIARSENG" set;

N 02°48'36" W, 5.00 feet to a 1/2" iron rod with plastic cap stamped "SPIARSENG" set;

S 87°11'24" W, 1677.79 feet to a 1/2" iron rod with plastic cap stamped "SPIARSENG" set;

S 88°35'24" W, 857.61 feet to a 1/2" iron rod with plastic cap stamped "SPIARSENG" set;

S 87°45'48" W, 346.50 feet to a 1/2" iron rod with plastic cap stamped "SPIARSENG" set;

And S 88°35'24" W, 209.16 feet to the POINT OF BEGINNING with the subject tract containing 42,274,206 square feet or 970.482 acres of land.

SURVEY RELATED SCHEDULE "B" - EXCEPTIONS	
First American Title Insurance Company, G.F. No: 1002-3911994-RTT, Effective 12/08/2023	
10(e)	Easement to Texas Power and Light Company, recorded in Volume 256, Page 454, Real Property Records, Collin County, Texas. AFFECTS AS SHOWN
10(f)	Easement to Texas Power and Light Company, recorded in Volume 256, Page 436, Real Property Records, Collin County, Texas. AFFECTS AS SHOWN
10(g)	Easement to Texas Power and Light Company, recorded in Volume 256, Page 453, Real Property Records, Collin County, Texas. DOES NOT AFFECT
10(h)	Easement to American Telephone and Telegraph Company, recorded in Volume 271, Page 584, Real Property Records, Collin County, Texas. AFFECTS; BLANKET IN NATURE
10(i)	Easement to Texas Power and Light Company, recorded in Volume 271, Page 573, Real Property Records, Collin County, Texas. AFFECTS; BLANKET IN NATURE
10(j)	Easement to Southwestern Bell Telephone Company, recorded in Volume 383, Page 444, Real Property Records, Collin County, Texas. AFFECTS; BLANKET IN NATURE
10(k)	Easement to Southwestern Bell Telephone Company, recorded in Volume 383, Page 443, Real Property Records, Collin County, Texas. AFFECTS; BLANKET IN NATURE
10(l)	Easement to Southwestern Bell Telephone Company, recorded in Volume 383, Page 451, Real Property Records, Collin County, Texas. AFFECTS; BLANKET IN NATURE
10(m)	Easement to Southwestern Bell Telephone Company, recorded in Volume 383, Page 469, Real Property Records, Collin County, Texas. AFFECTS; BLANKET IN NATURE
10(n)	Easement to the State of Texas, recorded in Volume 417, Page 155, Real Property Records, Collin County, Texas. DOES NOT AFFECT
10(o)	Easement to the State of Texas, recorded in Volume 417, Page 133, Real Property Records, Collin County, Texas. DOES NOT AFFECT
10(p)	Easement to the State of Texas, recorded in Volume 418, Page 257, Real Property Records, Collin County, Texas. DOES NOT AFFECT
10(q)	Easement to Texas Power and Light Company, recorded in Volume 423, Page 158, Real Property Records, Collin County, Texas. AFFECTS AS SHOWN
10(s)	Easement to Collin County Soil Conservation District, recorded in Volume 447, Page 220, Real Property Records, Collin County, Texas. DOES NOT AFFECT
10(u)	Easement to Collin County Soil Conservation District, recorded in Volume 551, Page 586, Real Property Records, Collin County, Texas. DOES NOT AFFECT
10(v)	Easement to the City of Anna, recorded in Volume 631, Page 54, Real Property Records, Collin County, Texas. NO DESCRIPTION THEREIN; UNABLE TO LOCATE
10(w)	Easement to the State of Texas, recorded in Volume 685, Page 543, Real Property Records, Collin County, Texas. DOES NOT AFFECT
10(x)	Easement to Grayson-Collin Electric Cooperative, recorded in Volume 813, Page 151, Real Property Records, Collin County, Texas. VAGUE, OUTDATED DESCRIPTION; UNABLE TO LOCATE
10(y)	Easement to South Grayson Water Supply Corp., recorded in Volume 1122, Page 207, Real Property Records, Collin County, Texas. AFFECTS AS SHOWN
10(z)	Easement to Westminster Special Utility District, recorded in ccf 20190531000819370, Real Property Records, Collin County, Texas, AFFECTS; UNABLE TO LOCATE

SURVEYOR'S CERTIFICATE

To: Sherley Partners, Ltd., Tellus Acquisitions LLC, First American Title Insurance Company, Republic Title of Texas, and their respective successors and assigns:

This is to certify that this map or plat and the survey on which it is based were made in accordance with the 2021 Minimum Standard Detail Requirements for ALTA/NSPS Land Title Surveys jointly established and adopted by ALTA and NSPS, and includes optional items 1, 2, 3, 4, 7(a), 8, 9, and 13 of Table A thereof. The field work was completed on 1/12/24.

Date of Plat or Map: 1/29/24

STATE OF TEXAS · REGISTERED · DARREN K. BROWN · 5252 · PROFESSIONAL · LAND SURVEYOR

darren.brown@spiarsengineering.com

Darren K. Brown, RPLS 5252

Part of the subject land is located in a 100-year Flood Plain or in an identified "flood prone area," as defined pursuant to the Flood Disaster Protection Act of 1973, as amended, as reflected by Flood Insurance Rate Map Panel 48085C0160J, effective on 6/2/2009. The property is located in Zone "A" (No base flood elevations determined) and Zone "X" (areas determined to be outside the 500-year floodplain).

SPIARS ENGINEERING & SURVEYING
765 Custer Road, Suite 100 • Plano, TX 75075 • 972.422.0077
TBPELS No: F-2121 and No. F-10043100 • www.spiarseng.com

website

ALTA/NSPS LAND TITLE SURVEY

COLLIN COUNTY, TEXAS

Sherley Farms

Issue Dates:

1/29/24

Revisions	Date

Scale:

Drawn By: ED

Checked By: DKB

Sheet 2 of 2

JOB # 23-288

Plotted by: jacobed Plot Date: 3/14/2024 10:02 AM
Drawing: G:\2023 JOBS\23-288 Sherley Farms\SURVEY\DWG\23-288 Survey.dwg Saved By: jacobed Save Time: 3/6/2024 2:58:27 PM

Drawing: G:\2023 JOBS\23-288 Sherley Farms\SURVEY\DWG\23-288 Survey.dwg Saved By: jcaldwell Save Time: 3/6/2024 2:08:57 PM Plotted by: jcaldwell Plot Date: 3/14/2024 10:05 AM

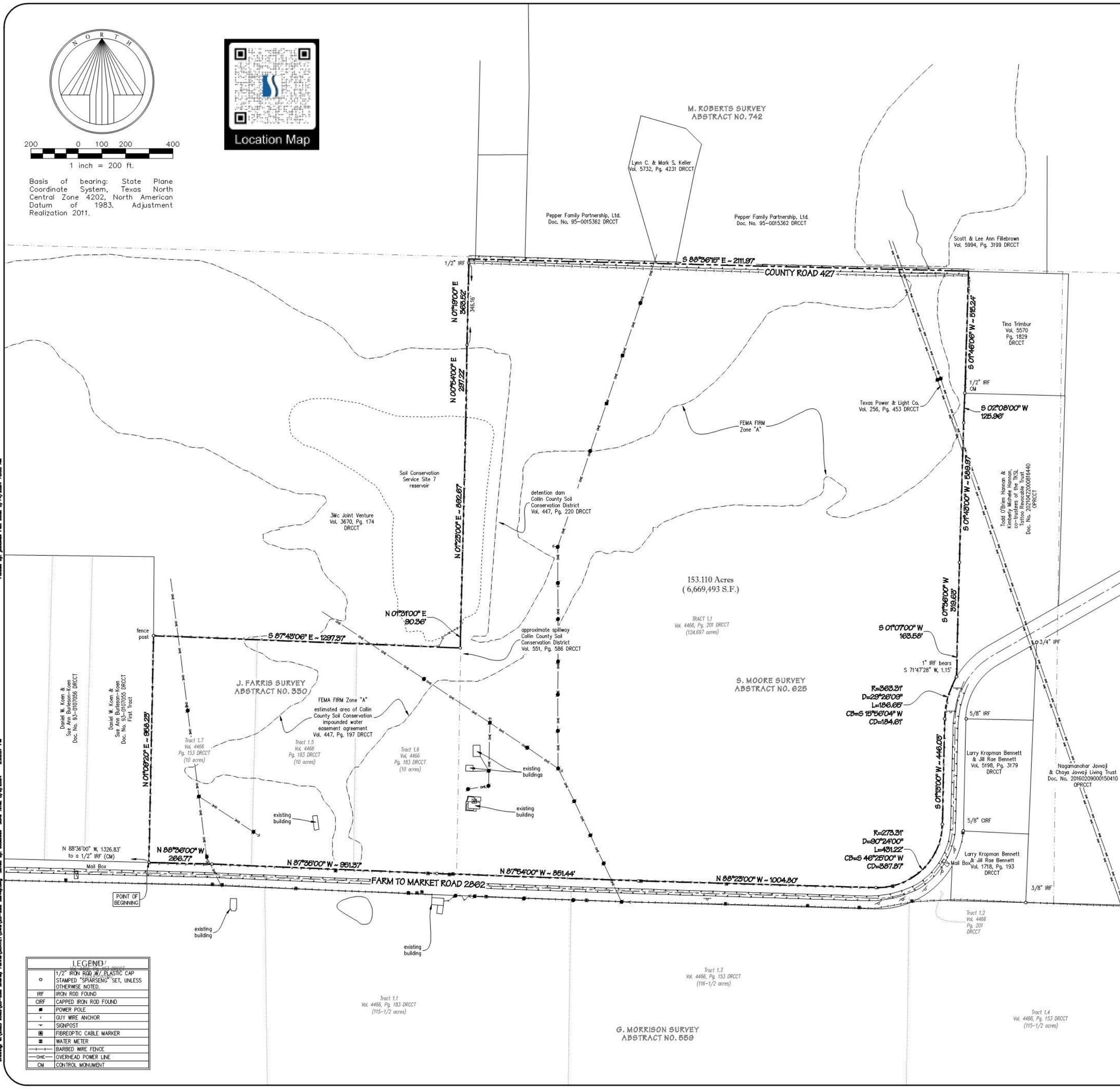

Basis of bearing: State Plane Coordinate System, Texas North Central Zone 4202, North American Datum of 1983. Adjustment Realization 2011.

LEGEND	
o	1/2" IRON ROD W/ PLASTIC CAP STAMPED "SPIARSENG" SET, UNLESS OTHERWISE NOTED.
IRF	IRON ROD FOUND
CIRF	CAPPED IRON ROD FOUND
●	POWER POLE
<	GUY WIRE ANCHOR
⊥	SIGNPOST
▣	FIBREOPTIC CABLE MARKER
▣	WATER METER
—x—x—	BARBED WIRE FENCE
—OHE—	OVERHEAD POWER LINE
CM	CONTROL MONUMENT

METES AND BOUNDS DESCRIPTION

BEING a tract of land situated in the J. Farris Survey, Abstract No. 330, and the S. Moore Survey, Abstract No. 625, in Collin County, Texas, being part of Tract 1.7, recorded in Volume 4466, Page 153, Deed Records, Collin County, Texas (DRCCT), and part of Tracts 1.5 and 1.6, recorded in Volume 4466, Page 183 DRCCT, and all of Tract 1.1, recorded in Volume 4466, Page 201 DRCCT, with the subject tract being more particularly described as follows:

BEGINNING at a 1/2" iron rod with plastic cap stamped "SPIARSENG" set on the north line of Farm to Market Road 2862, a called 90-foot-wide right-of-way, for the southeast corner of the "First Tract" conveyed to Daniel W. Koen and Sue Ann Burleson-Koen, recorded in Document No. 93-0107055 DRCCT, from which a 1/2" iron rod found bears N 88°36'00" W, 1326.83 feet;

THENCE N 01°09'20" E, 958.23 feet along the common line thereof to a fence post found for a southwest corner of a tract conveyed to 3Mc Joint Venture, recorded in Volume 3670, Page 174 DRCCT;

THENCE along the common line thereof the following:

S 87°43'06" E, 1297.37 feet to a 1/2" iron rod with plastic cap stamped "SPIARSENG" set;

N 01°31'00" E, 90.36 feet to a point on the bank of a reservoir;

N 01°23'00" E, 892.67 feet to a point on the bank of a reservoir;

N 00°54'00" E, 297.22 feet to a 1/2" iron rod with plastic cap stamped "SPIARSENG" set;

And N 01°19'00" E, passing at 346.16 feet a 1/2" iron rod found for witness, being on the south line of County Road 427, a public road, continuing into said road a total distance of 363.52 feet to a point for corner;

THENCE S 88°36'15" E, 2111.97 feet along said road to a point for corner being the northwest corner of a tract conveyed to Tina Trimbur, recorded in Volume 5570, Page 1829 DRCCT;

THENCE S 01°46'06" W, 515.24 feet along the west line thereof to a 1/2" iron rod found for the northwest corner of a tract conveyed to Todd O'Brien Hannan and Kimberly Michele Hannan, co-trustees of the TKSL Tattoo Revocable Trust, recorded in Document No. 20210422000816440, Official Public Records, Collin County, Texas;

THENCE along the west line thereof, the following:

S 02°08'00" W, 125.96 feet to a 1/2" iron rod with plastic cap stamped "SPIARSENG" set;

S 01°43'00" W, 589.97 feet to a 1/2" iron rod with plastic cap stamped "SPIARSENG" set;

S 01°36'00" W, 319.63 feet to a 1/2" iron rod with plastic cap stamped "SPIARSENG" set;

And S 01°07'00" W, 163.58 feet to a 1/2" iron rod with plastic cap stamped "SPIARSENG" set on the north line of Farm to Market Road 2862, and from which a 1" iron rod found bears S 71°47'28" W, 1.15 feet;

THENCE along the north line of said Farm to Market Road, the following:

A non-tangent curve to the left having a central angle of 29°26'09", a radius of 363.31 feet, a chord of S 15°56'04" W – 184.61 feet, an arc length of 186.65 feet to a 1/2" iron rod with plastic cap stamped "SPIARSENG" set;

S 01°13'00" W, 446.03 feet to a 1/2" iron rod with plastic cap stamped "SPIARSENG" set;

A tangent curve to the right having a central angle of 90°24'00", a radius of 273.31 feet, a chord of S 46°25'00" W – 387.87 feet, an arc length of 431.22 feet to a 1/2" iron rod with plastic cap stamped "SPIARSENG" set;

N 88°23'00" W, 1004.80 feet to a 1/2" iron rod with plastic cap stamped "SPIARSENG" set;

N 87°54'00" W, 851.44 feet to a 1/2" iron rod with plastic cap stamped "SPIARSENG" set;

N 87°35'00" W, 951.37 feet to a 1/2" iron rod with plastic cap stamped "SPIARSENG" set;

And N 88°36'00" W, 266.77 feet to the POINT OF BEGINNING with the subject tract containing 6,669,493 square feet or 153.110 acres of land.

SURVEY RELATED SCHEDULE "B" - EXCEPTIONS

First American Title Insurance Company, G.F. No. 1002-391994-RTT, Effective 12/08/2023

10(g)	Easement to Texas Power and Light Company, recorded in Volume 256, Page 453, Real Property Records, Collin County, Texas. AFFECTS AS SHOWN
10(i)	Easement to Texas Power and Light Company, recorded in Volume 271, Page 573, Real Property Records, Collin County, Texas. AFFECTS; BLANKET IN NATURE
10(m)	Easement to Southwestern Bell Telephone Company, recorded in Volume 383, Page 469, Real Property Records, Collin County, Texas. AFFECTS; BLANKET IN NATURE
10(n)	Easement to the State of Texas, recorded in Volume 417, Page 155, Real Property Records, Collin County, Texas. DOES NOT AFFECT
10(o)	Easement to the State of Texas, recorded in Volume 417, Page 133, Real Property Records, Collin County, Texas. DOES NOT AFFECT
10(p)	Easement to the State of Texas, recorded in Volume 418, Page 257, Real Property Records, Collin County, Texas. DOES NOT AFFECT
10(r)	Easement to Collin County Soil Conservation District, recorded in Volume 447, Page 197, Real Property Records, Collin County, Texas. AFFECTS AS SHOWN
10(s)	Easement to Collin County Soil Conservation District, recorded in Volume 447, Page 220, Real Property Records, Collin County, Texas. AFFECTS AS SHOWN
10(u)	Easement to Collin County Soil Conservation District, recorded in Volume 551, Page 586, Real Property Records, Collin County, Texas. AFFECTS AS SHOWN
10(x)	Easement to Grayson-Collin Electric Cooperative, recorded in Volume 813, Page 151, Real Property Records, Collin County, Texas. VAGUE, OUTDATED DESCRIPTION; UNABLE TO LOCATE
10(z)	Easement to Westminster Special Utility District, recorded in cc# 20190531000619370, Real Property Records, Collin County, Texas. AFFECTS; UNABLE TO LOCATE

SURVEYOR'S CERTIFICATE

To: Sherley Partners, Ltd., Tellus Acquisitions LLC, First American Title Insurance Company, Republic Title of Texas, and their respective successors and assigns:

This is to certify that this map or plat and the survey on which it is based were made in accordance with the 2021 Minimum Standard Detail Requirements for ALTA/NSPS Land Title Surveys jointly established and adopted by ALTA and NSPS, and includes optional items 1, 2, 3, 4, 7(a), 8, 9, and 13 of Table A thereof. The field work was completed on 01/12/23.

Date of Plat or Map: 1/29/24

STATE OF TEXAS REGISTERED DARREN K. BROWN 5252 PROFESSIONAL LAND SURVEYOR

darren.brown@spiarsengineering.com

Darren K. Brown, RPLS 5252

Part of the subject land is located in a 100-year Flood Plain or in an identified "flood prone area," as defined pursuant to the Flood Disaster Protection Act of 1973, as amended, as reflected by Flood Insurance Rate Map Panel 48085C0160J, effective on 6/2/2009. The property is located in Zone "A" (No base flood elevations determined) and Zone "X" (areas determined to be outside the 500-year floodplain).

SPIARS ENGINEERING & SURVEYING
765 Custer Road, Suite 100 • Plano, TX 75075 • 972.422.0077
TBPELS No. F-2121 and No. F-10043100 • www.spiarseng.com
website

ALTA/NSPS LAND TITLE SURVEY

COLLIN COUNTY, TEXAS

Sherley Farms

Issue Dates: 1/29/24

Date

Revisions

Scale: 1" = 200'
Drawn By: ED
Checked By: DKB
Sheet 1 of 1
JOB # 23-288

Exhibit C

Illustrative Layout

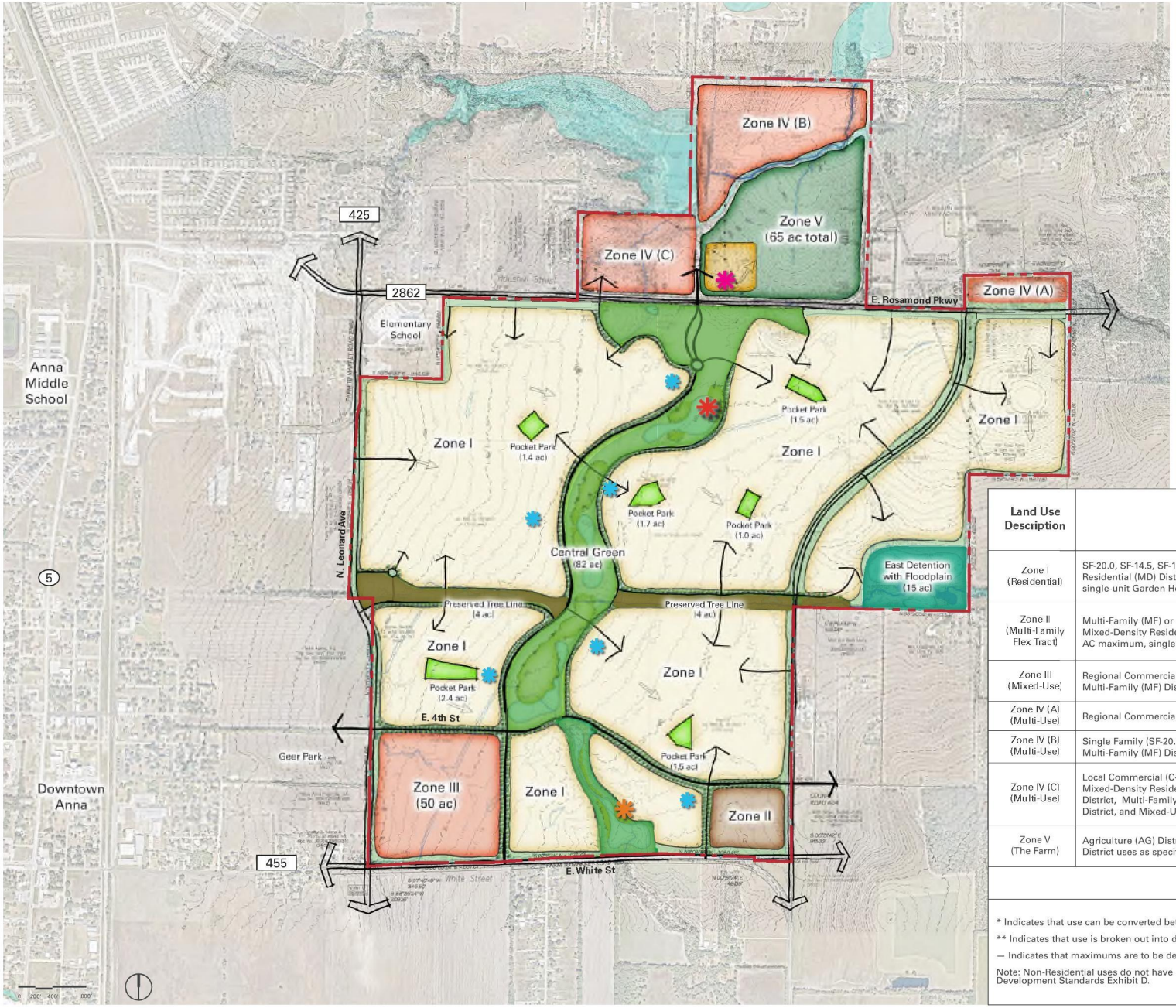

Open Space Summary	
Central Green	±74 ac
Preserved Tree Line	±8 ac
East Detention with Floodplain	±15 ac
Pocket Park	±10 ac
Miscellaneous	±10 ac
Total	±117 ac

Note: Pocket Park locations and sizes are conceptual and final location and size will be determined at platting

Legend

- A Farm-style Amenity Center with operational farming facilities for the benefit of community residents and the broader community
- Amenity Center No. 1 – to be precisely located at the time of Phase 1 Preliminary Plat
- Amenity Center No. 2 – to be precisely located and construction to start prior to the issuance of the 1,750th building permit
- Sherley Squares - conceptual locations to be determined through the platting process

Land Use Description	Zoning Classification	Maximums	
		Single-Family (SF) DUs	Multi-Family (MF) DUs
Zone I (Residential)	SF-20.0, SF-14.5, SF-12.0, SF-10.5, SF-8.4, SF-7.2, SF-6.0, Mixed-Density Residential (MD) District and Mixed-Use (MU) District limited to 8 AC Maximum, single-unit Garden Homes and single-unit Townhomes	3,030	0
Zone II (Multi-Family Flex Tract)	Multi-Family (MF) or SF-20.0, SF-14.5, SF-12.0, SF-10.5, SF-8.4, SF-7.2, SF-6.0, Mixed-Density Residential (MD) District and Mixed-Use (MU) District limited to 8 AC maximum, single-unit Garden Homes and single-unit Townhomes	160*	200*
Zone III (Mixed-Use)	Regional Commercial (C-2) District, Light Industrial (I-1) District, Multi-Family (MF) District, and Mixed-Density Residential (MD) District	–	600**
Zone IV (A) (Multi-Use)	Regional Commercial (C-2) District and Light Industrial (I-1) District	–	–
Zone IV (B) (Multi-Use)	Single Family (SF-20.0) District, Single Family Cottage Residential District, and Multi-Family (MF) District		
Zone IV (C) (Multi-Use)	Local Commercial (C-1) District, Single Family Residential (SF-20.0) District, Mixed-Density Residential (MD) District, Single Family Cottage Residential District, Multi-Family (MF) District, Agriculture (AG) District, Light Industrial (I-1) District, and Mixed-Use (MU) District		
Zone V (The Farm)	Agriculture (AG) District, Local Commercial (C-1) District and Mixed-Use (MU) District uses as specifically noted in Exhibit D Development Standards		
	TOTAL	3,190	800

* Indicates that use can be converted between single-family and multi-family as noted in the Development Standards Exhibit D.

** Indicates that use is broken out into different subcategories as noted in the Development Standards Exhibit D.

– Indicates that maximums are to be determined by site plans and plats as development occurs.

Note: Non-Residential uses do not have a prescribed maximum other than available acreage and specific limits within the Development Standards Exhibit D.

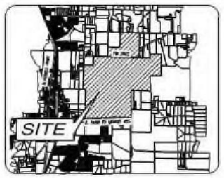

LOCATION MAP / KEY MAP

The information shown is based on the best information available and is subject to change without notice.

EXHIBIT C - ILLUSTRATIVE LAYOUT

SHERLEY FARMS

CITY OF ANNA, COLLIN COUNTY, TEXAS
G. MORRISON SURVEY ~ ABSTRACT NO. 559

DECEMBER OF 2024

Exhibit D

Development Standards

Exhibit D
Development Standards

TABLE OF CONTENTS:

SECTION 1. ADMINISTRATION
SECTION 2. USE CRITERIA BY ZONE
SECTION 3. OPEN SPACE STANDARDS
SECTION 4. AMENITIES
SECTION 5. SUBDIVISION ORDINANCE MODIFICATIONS
SECTION 6. ZONING ORDINANCE MODIFICATIONS
SECTION 7. ZONING SITE DESIGN CHANGES
SECTION 8. ZONING LANDSCAPING CHANGES
SECTION 9. ARTICLE 9.05 SIGN ORDINANCE
SECTION 10. DEFINITIONS
SECTION 11. ATTACHMENTS

SECTION 1. ADMINISTRATION

A. Interpretation

In the event of any conflict between the City Regulations and the development standards on this **Exhibit D**, the development standards on this **Exhibit D** shall control. The project shall abide by all City regulations, as amended herein.

B. Illustrative Plan - Exhibit C

The subject property, referred to herein as the "Site", shall generally develop per **Exhibit C**, the Illustrative Plan. The Illustrative Plan displays the general location and configuration of land uses, arterial and collector roads, and other area features. Exhibit C shall serve as the Concept Plan to inform future Preliminary Site Plans.

C. Administrative Modifications

Modifications to the Illustrative Plan, **Exhibit C,** shall be administered per the thresholds in Table 1.. Preliminary Site Plans shall be administered per the thresholds in Table 1. Minor Amendments shall be administratively approved by the Director of Development Services if such modifications otherwise comply with these Development Standards. Major Amendments shall require approval of the Planning and Zoning Commission and City Council. Major Amendments shall require a complete amended and restated Planned Development District document rather than a brief amendment that refers to the original Planned Development District document.

Table 1: Major and Minor Amendments

Minor Amendment	Major Amendment
Modification up to 10% to the numerical standards of the Planned Development District	Modification greater than 10% to the numerical standards of the district
Throughfares and Blocks may be modified while maintaining the general throughfare connectivity as depicted in **Exhibit C**.	Any change that does not maintain connectivity as generally depicted in **Exhibit C**.
Modification of the anticipated order of development for the overall property	N/A
Modifications to approved Street Cross-Sections to accommodate specific considerations regarding traffic calming, emergency vehicle access, accommodate pedestrian and bike traffic, and modify on-street parking configuration	N/A

D. Applicability of Subdivision Ordinance, Design Standards and Zoning Ordinance

The subject property is intended to be an architecturally and culturally significant tract of land that is meaningfully located along two regionally significant east-west thoroughfares and just east of Downtown Anna. Except as otherwise provided in these Development Standards (**Exhibit D)**, the City's subdivision ordinance, design standards and zoning ordinance in effect at the time of the written approval of this Planned Development shall apply.

SECTION 2. USE CRITERIA BY ZONE

The site shall be developed according to applicable city regulations as amended herein to the Zones as depicted in **Exhibit C**. The Site is divided into six zones with distinctive characters and uses permitted in each Zone as described herein.

A. Zone I - Residential Tracts

1. Permitted Uses

The tracts shown on **Exhibit C** as Zone I shall be developed in accordance with one or more of the following zoning district regulations as modified herein and may be developed with any use permitted in any of the following zoning districts: SF-20.0, SF-14.5, SF-12.0, SF-10.5, SF-8.4, SF-7.2, SF-6.0, Mixed-Density Residential (MD) District uses as outlined herein, Garden Home Unit, Townhome Unit and Mixed-Use (MU) District. Additionally, school uses and Civic/City uses are permitted within the Residential Tracts. These tracts shall include outdoor amenitization of the adjacent open space and detention areas.

2. Lot Type Criteria

A maximum of 3,030 dwelling units may be attached or detached. Within Zone I the 3,030 dwelling unit product mix shall be allocated in accordance with the following proportional limitations:

Table 2: Lot Type Allocation

Lot Type	Zoning Designation	Site Approx. Lot Width	Unit Mix Thresholds
A	SF-20	100'	A Minimum of 6% of total lots in Zone I
B	SF-14.5	100'	
C	SF-12.0	90'	A Minimum of 6% of total lots in Zone I
D	SF-10.5	80'	
E	SF-8.4	70'	
F	SF-7.2	60'	A Maximum of 60% of total lots in Zone I
G	SF-6.0	50'	
H	MD 40	40'	A Maximum of 30% of total lots in Zone I
I	MD Single-Family Attached (Townhomes)	25'	
J	MD Garden Homes	60'	

Note: To maintain a balance of lot types, the minimum percentage of Type A through E lots (in aggregate) will be at least 10% of the total number of lots indicated on City-approved Civil Plans to be measured at the point where an increment of 750 lots is triggered by the submission of Civil Plans for City Approval. The percentage of Type A through E lots in excess of 10% shall be counted

as a credit that will accumulate credit to the next 750 lot increment measure so that the measure is accounted for as a cumulative requirement. The Civil Engineering Plans for each Phase shall include a table that details this condition on a cumulative basis.

3. **Mixed-Use Node Criteria**
   A maximum of four (4) two-acre Mixed-Use Nodes ("Sherley Squares") at select locations within Zone I. Exact locations of Mixed-Use Nodes shall be indicated on a Preliminary Site Plan within the Zone I area as depicted on Exhibit C. Where a Mixed-Use Node is placed it shall replace the underlying zoning on the parcel in which it is used. If the Mixed-Use Node is not used the underlying zoning shall remain. These Mixed-Use Node locations shall maintain a 1,000' separation between individual Mixed-Use Nodes. The Mixed-Use Node locations shall be limited to either restaurant, retail, live-work or other service uses intended to provide more neighborhood services dispersed throughout the development. The Mixed-Use Nodes shall be developed according to the Mixed-Use (MU) District Dimensional Standards and shall be required to meet the parking requirements of the particular use developed with on-street parking, off-street parking or a mixture of both. On-street parking will be parallel.

B. Zone II - Multifamily (Flex Tract)

1. **Permitted Uses**
   The tract shown on **Exhibit C** as Zone II shall be developed in accordance with either the Multi-Family Residential (MF) District or may revert to the Residential zoning district regulations permitted in Zone I as modified herein along with school uses and Civic/City uses. This tract shall include outdoor amenitization of the adjacent open space and detention areas. This tract shall be subject to a maximum multi-family dwelling unit count of 200 units.

2. **Unit Reallocation Criteria**
   Should this tract revert to one or more of the Residential zoning districts permitted in Zone I, the 200 Multi-Family units shall increase the 3,030 permitted dwelling units by 160 units to a revised total of 3,190 Single Family units. If developed as single family, the unit thresholds in **Table 2: Lot Type Allocation** of Zone I above shall apply.

3. **Site Plan Requirement**
   Development in Zone II requires Site Plan approval to ensure conformance with city development standards as modified herein.

C. Zone III – South Multi-Purpose Commercial Tract

1. **Permitted Uses**
   The tract shown on **Exhibit C** as Zone III shall be developed in accordance with one or more of the following zoning district regulations as modified herein and may be developed with any use permitted in their corresponding base zoning districts, unless otherwise stated:
   - Regional Commercial (C-2) District:
     - All permitted uses
   - Light Industrial (I-1) District, limited to the following uses:
     - Batching Plant (Permitted as a Temporary Use)
     - Brewery/Distillery
     - Tasting Room
     - Self-Storage (Mini-Warehouse) Limited to 125,000 SF of ground-level floor area.
     - Commercial Kitchen
     - Food Truck Park
     - Greenhouse and Nursery
   - Multi-Family Residential (MF) District:
     - All permitted uses

    - Total Multi-Family units not to exceed 600 total units
    - Townhome Unit (multiple DUs on single platted lot) – limited to a maximum unit count of 100
    - Duplex Unit (multiple DUs on single platted lot) – limited to a maximum unit count of 100
    - Condos - limited to a maximum of unit count of 100
    - Multi-Family building types, other than Townhome Unit and Duplex Unit, limited to a maximum unit count of 400 Multi-Family Units
- Mixed-Density Residential (MD) District:
    - All permitted uses (including Single-Family Attached (single DU on single platted lot, including without limitation individual-lot townhome) and Two-Family Dwellings (single DU on single platted lot including without limitation individual-lot duplex)

2. Prohibited Uses

Prohibited Uses in Zone III include the following:

- Pawn Shop / Pay day loans
- Radio/Television studios
- Taxidermist
- Funeral Services
- Governmental service yards
- Flea Market

3. Dimensional Standards

The Zoning Districts selected for Zone III shall be developed in accordance with their corresponding dimensional standards:

- Regional Commercial (C-2) District, as modified herein
- Light Industrial (I-1) District, as defined in Section 9.04.023
- Multi-Family Residential (MF) District, as modified herein
- Mixed-Density Residential (MD) District, as modified herein

If a proposed use is permitted in multiple zoning categories, the applicant will indicate which set of dimensional standards will apply on the site plan.

4. Buffer Criteria:

Any permitted Light Industrial (I-1) use shall be buffered from being directly adjacent to for-sale single-family attached or detached housing by a buffer street, buffer use, or a landscape buffer.

- A Buffer street is a Collector or larger street;
- A Buffer use is either Multi-Family, Mixed-Use, Commercial, or Retail uses in-between Light Industrial uses and for-sale single-family attached or detached housing.
- A landscape buffer shall be a landscaped area of at least 25 feet in width along the common property line planted with one canopy tree for each 30 linear feet, provided that the spacing shall be reasonably expanded to accommodate a specific tree species requiring more spacing to promote long term health and growth.

5. Site Plan Requirement

Development in Zone III requires Site Plan approval to ensure conformance with city development standards.

D. Zone IV – North Multi-Purpose Commercial Tracts

1. Site Plan Requirement

Development in Zone IV and its sub-zones require Site Plan approval to ensure conformance with city development standards.

2. Zone IV(A)

a. Permitted Uses

The tracts shown on **Exhibit C** as Zone IV(A) shall be developed in accordance with one or more of the following zoning district regulations as modified herein and may be developed with any use permitted in their corresponding base zoning districts, unless otherwise stated:

- Regional Commercial (C-2) District:
    - All permitted uses
- Light Industrial (I-1) District, limited to the uses following uses:
    - Batching Plant (Permitted as a Temporary Use)
    - Brewery/Distillery
    - Commercial Kitchen
    - Food Truck Park
    - Outdoor Storage
    - Feed and Farm Supply
    - Greenhouse and Nursery
    - Auto Repair (Heavy and Light)
    - Heavy Equipment Sales and Rentals
    - Athletic Field (Public and Private)
    - Community Center (Public and Private)
    - Country Club
    - Racetrack
    - Sport Shooting Range
    - Park
    - Commercial Cleaning Facility
    - Self-Storage (Mini Warehouse)
    - Wholesale Showroom Facility
    - Assisted Living Facility
    - Child Care Facility, Daycare
    - Community Home for Persons with Disabilities
    - Agriculture
    - Agritainment
    - Outdoor Storage and Display
    - Stable
    - Swimming Pool Private

b. Prohibited Uses

Prohibited Uses in Zone IV(A) include the following:

- Radio/Television studios
- Taxidermist
- Funeral Services
- Governmental service yards
- Flea Market

c. Dimensional Standards

The Zoning Districts selected for Zone IV(A) shall be developed in accordance with their corresponding dimensional standards:

- Regional Commercial (C-2) District, as modified herein
- Light Industrial (I-1) District, as defined in Section 9.04.023

If a proposed use is permitted in multiple zoning categories, the applicant will indicate which set of dimensional standards will apply on the site plan.

3. Zone IV(B)

a. Zone Vision

Zone IV(B)- is envisioned to be a primarily residential area surrounded by floodplain open space.

b. Permitted Uses

The tract shown on **Exhibit C** as Zone IV(B) shall be developed in accordance with one or more of the following zoning district regulations as modified herein and may be developed with any use permitted in their corresponding zoning districts, unless otherwise stated:

- Single Family Residential (SF-20.0) District:
  - All permitted uses
- Single-Family Cottage Residential District:
  - Industrialized Home (Modular Home)
  - Manufactured Homes (with permanent foundation)
  - Single-Family Dwelling, detached
  - Single-Unit or Duplex Unit Park
  - Bed and Breakfast Facility (SUP required)
  - Dormitory (SUP required)
  - Athletic Field, Public
  - Athletic Field, Private (SUP required)
  - Community Center, Public
  - Community Center, Private
  - Park
  - Swimming Pool
  - Civic Center
  - Public Library, Museum or Art Gallery (SUP required)
  - Religious Land Use
  - School
  - Child Care Home (≤6 Children) (SUP required)
  - Electrical Substation (SUP required)
  - Gas Metering Station (SUP required)
  - Gas Metering Station with Odorizer (SUP required)
  - Governmental Service yard (SUP required)
  - Radio, TV or Microwave Operations, Amateur (SUP required)
  - Accessory Building
  - Accessory Dwelling Unit (SUP required)
  - Carport
  - Home Occupation
  - Garage
  - Swimming Pool, Private (SUP required)
  - Wind Energy Conversion System (SUP required)
  - Batching Plant (Permitted as a Temporary Use)
  - Field or Sales Office
  - May include Shared Workspace as a permitted accessory use that will serve as a residential amenity
- Multi-Family Residential (MF) District:
  - Cottage Unit only (if multiple DUs on a single platted lot)

c. Dimensional Standards

The Zoning Districts selected for Zone IV(B) shall be developed in accordance with their corresponding dimensional standards:

- Single Family Residential (SF-20.0) District, as modified herein
- Single-Family Cottage Residential District, as defined herein
- Multi-Family Residential (MF) District, as defined herein

If a proposed use is permitted in multiple zoning categories, the applicant will indicate which set of dimensional standards will apply on the site plan.

4. Zone IV(C)

a. Permitted Uses

The tracts shown on **Exhibit C** as Zone IV(C) shall be developed in accordance with one or more of the following zoning district regulations, as modified herein, and may be developed with any use permitted in their corresponding base zoning districts, unless otherwise stated:

- Local Commercial (C-1) District:
  - All permitted uses
  - Medical Care Facility
  - Childcare Facility, Daycare
- Single Family Residential (SF-20.0) District:
  - All permitted uses
- Mixed Density (MD) Residential
  - All permitted uses
- Single-Family Cottage Residential District:
  - Industrialized Home (Modular Home)
  - Manufactured Home (with permanent foundation)
  - Single-Family Dwelling, detached
  - Single-Unit or Duplex Unit Park
  - Bed and Breakfast Facility (SUP required)
  - Dormitory (SUP required)
  - Athletic Field, Public
  - Athletic Field, Private (SUP required)
  - Community Center, Public
  - Community Center, Private
  - Park
  - Swimming Pool
  - Civic Center
  - Public Library, Museum or Art Gallery (SUP required)
  - Religious Land Use
  - School
  - Child Care Home (≤6 Children) (SUP required)
  - Electrical Substation (SUP required)
  - Gas Metering Station (SUP required)
  - Gas Metering Station with Odorizer (SUP required)
  - Governmental Service yard (SUP required)
  - Radio, TV or Microwave Operations, Amateur (SUP required)
  - Accessory Building
  - Accessory Dwelling Unit (SUP required)
  - Carport
  - Home Occupation
  - Garage
  - Swimming Pool, Private (SUP required)
  - Wind Energy Conversion System (SUP required)
  - Batching Plant (Permitted as a Temporary Use)
  - Field or Sales Office
  - May include Shared Workspace as a permitted accessory use that will serve as a residential amenity
- Multi-Family Residential (MF) District:
  - Cottage Unit only (if multiple DUs on single platted lot)

- Agricultural (AG) District:
    - All permitted uses
    - Agritainment
    - Itinerant Vendor
    - Farmer's Market
- Light Industrial (I-1) District, limited to the uses following uses:
    - Batching Plant (Permitted as a Temporary Use)
    - Brewery/Distillery
    - Tasting Room
    - Commercial Kitchen
    - Food Truck Park
    - Greenhouse and Nursery
    - Feed and Farm Supply
    - Bar
    - Private Club
- Mixed Use Development
    - All permitted uses

b. Dimensional Standards

The Zoning Districts selected for Zone IV(C) shall be developed in accordance with their corresponding dimensional standards:

- Local Commercial District (C-1), as modified herein
- Single Family Residential (SF-20.0) District, as modified herein
- Single Family Cottage Residential District, as modified herein
- Mixed Density (MD) Residential, as modified herein
- Multi-Family Residential (MF) District, as defined herein
- Agricultural (AG) District, as defined herein
- Light Industrial (I-1) District, as defined herein
- Mixed-Use (MU) District, as defined herein

If a proposed use is permitted in multiple zoning categories, the applicant will indicate which set of dimensional standards will apply on the site plan.

E. Zone V - The Farm

1. Zone Vision

The Farm is envisioned to be an agricultural reserve with agricultural focused commercial activities.

2. Permitted Uses

Tracts shown on **Exhibit C** as Zone V shall be developed in accordance with one or more of the following zoning district regulations as modified herein and may be developed with any use permitted in their corresponding base zoning district, unless otherwise stated:

- Section 9.04.028 land use table AG uses already permitted by right
- Agritainment
- Artist Studio
- Bar
- Brewpub
- Food preparation and sales
- Food Truck Park
- Grocery Store
- Mixed-Use (MU)
- Restaurant and tasting room
- Outdoor Dining
- Farmer's Market

- On-Site Residence for Farmer
- Multi-Family (Permitted with SUP)
- Hotel (Permitted with SUP)
- Brewery/Distillery (Permitted with SUP)
- Childcare facility (Permitted with SUP)

3. **Prohibited Uses**
   Prohibited Uses in Zone V include the following:
   - Feedlot
   - Mobile Home / Manufactured Homes with chassis and wheels (personal property)
   - Wind Energy Conversion System
   - Country Club
   - Golf Course
   - Carport
   - Concrete Batch Plant
   - Flea Market
   - Seasonal Roadside Stand

4. **Dimensional Standards**
   The Zoning Districts selected for Zone V shall be developed in accordance with their corresponding dimensional standards:
   - Agricultural (AG) District, as defined herein
   - Local Commercial District (C-1), as modified herein
   - Mixed-Use (MU) District, as defined herein

   If a proposed use is permitted in multiple zoning categories, the applicant will indicate which set of dimensional standards will apply on the site plan.

5. **Site Plan Requirement**
   Development in Zone V requires Site Plan approval to ensure conformance with city development standards.

SECTION 3. OPEN SPACE

A. Vision

The vision for the community includes extensive open space and activation of detention areas with concrete trails and single-loaded streets that preserve the public view of the natural beauty. The pocket parks are intended to provide valuable open space within walking distance of most residential units, provide passive and moderately active recreational opportunities including, but not limited to, open play areas, natural interpretive areas, neighborhood playgrounds, children's water play areas, and small neighborhood gathering spaces. The central green is intended to create a natural scenic connection through the center of the community and shall consist of trails, natural landscaping, usable open space, and ponds that are reflective of the native environment. The open space requirements in 9.04.029(d) (3) shall not apply to Mixed-Density Residential types, multifamily units or residential uses in Zones II, III, IV and V, as the open space provided in Zone I is to serve the needs for the entire development Site.

B. Required Elements

Open space, that is publicly accessible, whether owned and maintained by the City of Anna, the Owners Association, or other ownership entity, shall count toward the minimum open space requirement. The open space and amenities identified in this section and the Open Space and Trails **Exhibit J** satisfies the open space and park requirements for the Site in its entirety and no park acquisition or development fees are applicable. The open space for the Site shall include:

1. A regional trail running north / south through the project along the primary open space areas which will include trailheads.
2. Incorporation of pocket parks and activated open space throughout the community, as generally shown on the Illustrative Plan. The size and location of pocket parks and activated open space shall be generally delineated on a Preliminary Site Plan and then finalized through the platting process. Pocket parks and activated open space may be spread across multiple locations within the Zone provided the overall amount of the requirement is met as depicted on **Exhibit C.**

C. Maintenance

Open Space and structures thereon shall be maintained by the property owner, the Owners Association, or other ownership entity unless otherwise dedicated to the City. The property owner, Owners Association, or other ownership entity may adopt rules and regulations regarding access, permitted uses, security (policing) and maintenance responsibilities for the Open Space.

SECTION 4. AMENITIES

Amenity Centers shall be located on a private lot and shall not count towards any open space requirement.

A. One large amenity center to be located in Phase 1 including, at a minimum: an amenity center building, a swimming pool, bathrooms, a playground, and an open recreation area. Construction for this amenity center shall commence prior to the issuance of the 300th single family building permit.

B. A second amenity center on the southern side of the community, including at a minimum: an amenity center building, bathrooms, a playground, and an open recreation area. Construction for this amenity center shall commence prior to the issuance of the 1,750th single family building permit.

SECTION 5. SUBDIVISION ORDINANCE MODIFICATIONS

A. Revise 9.02.081.a to read:

The construction, arrangement, character, extent, width, grade and location of all streets shall conform to the city's comprehensive plan and design standards and shall be considered in their relation to the following, whether the streets are within the city, or within its ETJ area. Street sections presented in this **Exhibit D** shall supersede any other City of Anna ordinances or standards.

B. Revise 9.02.081.c.4 to read:

Approach streets and access.

All subdivisions must have at least two points of vehicular access and must be connected via improved streets (streets that meet the city standards) to the city's improved thoroughfare and street system by one or more approach streets of such dimensions and improved to such standards as required herein. All residential subdivisions, with the exception of multifamily dwellings and single-unit or duplex unit park developments, shall provide no less than one entrance for each 50 lots including stubs for future development. ~~and in no case shall have more than 150 lots for each connection to an existing street.~~

C. Revise 9.02.081.c.5.A to read:

Off-site and adjacent improvements based on traffic impact analysis (TIA) of project specific impacts.

a. If in the opinion of the City Engineer or Director of Development Services, sufficient vehicular access and street capacity approaching and adjacent to the subdivision is not available to serve the proposed subdivision, the city may require the developer to provide a traffic impact analysis ("TIA") of the proposed development. ~~Such TIA when required shall be submitted to the City as part of the preliminary~~

~~plat application.~~ Based on the TIA, necessary improvements attributable to the proposed development may be incorporated into the development plans at the discretion of city staff.

D. Revise 9.02.081.L.1 to read:

Street section requirements.

Typical street sections shall be based upon projected traffic volume, existing soil conditions, and drainage condition and requirements. Street right-of-way widths, pavement widths, and median widths shall be as shown on ~~the comprehensive plan, in the City's design standards, and shall specifically be as specified in Division 9, Table 1.~~ **Exhibit D** in the Development Agreement.

E. Revise 9.02.081.o.1 to read:

Maximum and minimum length of block or street segments.

The maximum length of any block or street segment, ~~including~~ excluding looped streets, shall be 1,200 feet and the minimum length of any block or street segment shall be 400 feet. except in a key lot scenario, as measured along the street centerline and between the point(s) of intersection with other through streets. The minimum block length for a horseshoe street shall be 260 feet. A cul-de-sac or dead-end street shall not be considered a through street and shall not exceed 600' in length for Lot Types F through J, but otherwise shall not exceed 900' in length. The block length is not measured along the side of a block that does not include the front of any lot.

F. Revise 9.02.081.t.1 to read:

Residential driveways.

Residential driveway cuts shall not be allowed on streets that are larger than a neighborhood (50-foot right-of-way) or residential collector street (60-foot right-of-way). ~~Residential driveways shall be at least 30 feet from any intersection.~~ For corner lots residential driveways shall be located on the opposite side of the lot from the intersection. Rear and side driveway access to collector and thoroughfare streets shall be prohibited.

G. Revise 9.02.083.b to read:

Residential alleys.

~~In residential districts, alleys shall be parallel, or approximately parallel, to the frontage of the street. Alleys in residential districts shall provide a minimum of 20 feet of right-of-way and 15 feet of pavement.~~ Alleys in residential districts shall provide a Right-of-way and pavement width in compliance with the street sections presented in **Exhibit D** of the Development Agreement.

H. Revise 9.02.086.a.1 to read:

Pedestrian concrete walkways (sidewalks) not less than the following width shall be provided along both sides of newly constructed streets as follows:

Street Type	Sidewalk Width
Arterial	6 feet
Divided and undivided collector	6 feet
Neighborhood collector	6 feet
Local residential	~~6~~5 feet

I. Revise 9.02.087.e to read:

Double frontage lots.

Residential subdivisions with double frontage lots shall be avoided, except where they may be essential to provide separation from arterial or collector streets, or to overcome a specific disadvantage or hardship imposed by topography or other factors. Where lots have double frontage, appropriate building setback lines shall be established for each street side, and rear yard screening shall be provided in accordance with section 9.02.167 of this article. Except as provided within this subsection, residential lots shall not back onto any residential street or collector street within a residential area or neighborhood. ~~and shall not have more than ½ of their perimeter boundaries along streets~~

J. Revise 9.02.087.g to read:

Residential lot depth.

(1) No lot shall be platted less than 100 feet in depth unless located within the mixed density residential (MD) District, the downtown (DT) District, applicable planned development (PD) District, or districts where minimum lot depth is N/A.

(2) Lots facing or backing on arterial or collector roadways (rights-of-way greater than 60 feet), shall be at least 10 feet deeper than the minimum required depth of lots facing the local streets within the development. This depth is in addition to the minimum 20-foot-wide landscape buffer requirement for residential developments when adjacent to arterial and collector roadways. If a landscape buffer of 30' or deeper is provided, the requirement for a 10' deeper residential lot shall not apply.

K. Revise 9.02.087.b to read:

Minimum frontage on a public street.

Each lot on a subdivision plat shall front onto a dedicated, improved public street or HOA owned open space lot, unless platted as an approved private street subdivision in accordance with these subdivision regulations. All single family detached lots shall have a minimum of 40 feet of frontage as measured at the front building setback line fronting a dedicated, improved street unless other provisions have been authorized under article 9.04 or an approved planned development district. Lots that front onto an HOA-owned open space lot shall have access to a dedicated, improved public alley.

L. Revise 2.14.A of the City of Anna Design Standards Manual to read:

Residential: Residential driveways to serve two car garages shall be not less than eleven (11) feet nor more than ~~twenty (20)~~ twenty-two (22) feet in width at the property line. The width of the driveway will be larger at the garage for a three car (width to be maximum of twenty-eight (28) feet). Shared driveways and garages larger than three cars shall be a case-by-case basis as may be approved administratively by city staff. Residential driveways shall be separated from one another by a distance of at least ten (10) feet. The radii of all residential driveway returns shall be a minimum of five (5) feet and shall not extend past the adjoining property line. ~~The driveway approaches devoted to one use shall not occupy more than sixty percent (60%) of the frontage abutting the roadway or alley.~~

SECTION 6. ZONING ORDINANCE MODIFICATIONS

A. Sec. 9.04.010 Single-Family Residential (SF-20.0) District (Type A Lot)

(a) Purpose. The Single-Family Residential (SF-20.0) district is designed to accommodate a single-family residential development lot design on approximately half-acre (1/2 acre) lots. The district may be appropriately located near agricultural and single-family residential uses. This district implements the character and intent of the Comprehensive Plan's Estate Residential Place Type.

(b) Uses. See Table 19: Use Table and all applicable regulations in Division 3.

(c) Dimensional Standards. Development in the Single-Family Residential (SF-20.0) district shall follow Table 3: Single-Family Residential (SF-20.0) District Dimensional Standards, as modified.

Table 3: Single-Family Residential (SF-20.0) District Dimensional Standards – Type A

Single-Family Residential (SF-20.0) District Dimensional Standards		
Lot Requirements		
A	Lot Area ~~(min.)~~	20,000 square feet average 15,000 square feet minimum
B	Lot Width (min.) as measured at front building setback line	100 feet
C	Lot Depth (min.)	150 feet
D	Lot Coverage (max.)	40%

Setback Requirements		
E	Front Yard (min.)	Garage - 25 feet House Face / Porch – 20 feet
F	Rear Yard (min.)	25 feet
G	Side Yard (min.)	10 feet
H	Corner Side Yard (min.)	15 feet
Building Requirements		
I	Building Height (max.)	35 feet
Additional Applicable Requirements within the Zoning Ordinance		
Sec. 9.04.041 – Dimensional Regulations Sec. 9.04.042 – Site Design Requirements Sec. 9.04.043 – Parking Sec. 9.04.044 – Loading Sec. 9.04.045 – Landscaping		Sec. 9.04.046 – Screening and Fencing Sec. 9.04.047 – Outdoor Lighting Sec. 9.04.048 – Trash Sec. 9.04.049 – Performance Standards

(d) Special Regulations.

(1) The Single-Family Residential (SF-20.0) district shall not be within 1,200 feet of a Major Highway as designated on the 2045 Master Thoroughfare Plan. This distance shall be measured from the right-of-way centerline to the residential property line.

(2) The corner side yard for "key lots" shall meet the minimum front yard setback requirement.

(3) Average lot size will be calculated based upon the lots of the applicable type on the Final Plat and the average lot sizes will be noted on the lot size table.

B. Sec. 9.04.011 Single-Family Residential (SF-14.5) District (Type B Lot)

(a) Purpose. The Single-Family Residential (SF-14.5) district is designed to accommodate a single-family residential development design on roughly one-third acre (⅓-acre) lots. The district can be appropriately located near agricultural and single-family residential uses. This district implements the character and intent of the Comprehensive Plan's Suburban Living Place Type.

(b) Uses. See Table 19: Use Table and all applicable regulations in Division 3.

(c) Dimensional Standards. Development in the Single-Family Residential (SF-14.5) district shall follow Table 4: Single-Family Residential (SF-14.5) District Dimensional Standards, as modified.

Table 4: Single-Family Residential (SF-14.5) District Dimensional Standards – Type B

Single-Family Residential (SF-14.5) District Dimensional Standards		
Lot Requirements		
A	Lot Area (min.)	14,500 square feet Average 12,150 square feet minimum
B	Lot Width (min.) as measured at front building setback line	90 feet
C	Lot Depth (min.)	135 feet
D	Lot Coverage (max.)	45%
Setback Requirements		
E	Front Yard (min.)	Garage - 25 feet House Face / Porch – 20 feet
F	Rear Yard (min.)	25 feet
G	Side Yard (min.)	8 feet
H	Corner Side Yard (min.)	15 feet
Building Requirements		
I	Building Height (max.)	35 feet
Additional Applicable Requirements within the Zoning Ordinance		

Sec. 9.04.041 – Dimensional Regulations Sec. 9.04.042 – Site Design Requirements Sec. 9.04.043 – Parking Sec. 9.04.044 – Loading Sec. 9.04.045 – Landscaping	Sec. 9.04.046 – Screening and Fencing Sec. 9.04.047 – Outdoor Lighting Sec. 9.04.048 – Trash Sec. 9.04.049 – Performance Standards

(d) Special Regulations.

(1) The Single-Family Residential (SF-14.5) district shall not be within 1,200 feet of a Major Highway as designated on the 2045 Master Thoroughfare Plan. This distance shall be measured from the right-of-way centerline to the residential property line.

(2) The corner side yard for "key lots" shall meet the minimum front yard setback requirement.

(3) Average lot size will be calculated based upon the lots of the applicable type on the Final Plat and the average lot sizes will be noted on the lot size table.

C. Sec. 9.04.012 Single-Family Residential (SF-12.0) District (Type C Lot)

(a) Purpose. The Single-Family Residential (SF-12.0) district is designed to accommodate single-family residential development on roughly quarter-acre (¼-acre) lots. The district can be appropriately located near agricultural and single- family residential uses. This district implements the character and intent of the Comprehensive Plan's Suburban Living PlaceType.

(b) Uses. See Table 19: Use Table and all applicable regulations in Division 3.

(c) Dimensional Standards. Development in the Single-Family Residential (SF-12.0) district shall follow Table 5: Single-Family Residential (SF-12.0) District Dimensional Standards, as modified.

Table 5: Single-Family Residential (SF-12.0) District Dimensional Standards – Type C

Single-Family Residential (SF-12.0) District Dimensional Standards		
Lot Requirements		
A	Lot Area (min.)	12,000 square feet average 9,600 square feet minimum
B	Lot Width (min.) as measured at the front building setback line	80 feet
C	Lot Depth (min.)	120 feet
D	Lot Coverage (max.)	45%
Setback Requirements		
E	Front Yard (min.)	Garage - 25 feet House Face / Porch – 15 feet
F	Rear Yard (min.)	25 feet
G	Side Yard (min.)	8 feet
H	Corner Side Yard (min.)	15 feet
Building Requirements		
I	Building Height (max.)	35 feet
Additional Applicable Requirements within the Zoning Ordinance		
Sec. 9.04.041 – Dimensional Regulations Sec. 9.04.042 – Site Design Requirements Sec. 9.04.043 – Parking Sec. 9.04.044 – Loading Sec. 9.04.045 – Landscaping		Sec. 9.04.046 – Screening and Fencing Sec. 9.04.047 – Outdoor Lighting Sec. 9.04.048 – Trash Sec. 9.04.049 – Performance Standards

(d) Special Regulations.

(1) The Single-Family Residential (SF-12.0) district shall not be within 1,200 feet of a Major Highway as designated on the 2045 Master Thoroughfare Plan. This distance shall be measured from the

right-of-way centerline to the residential property line.

(2) The corner side yard for "key lots" shall meet the minimum front yard setback requirement.

(3) Average lot size will be calculated based upon the lots of the applicable type on the Final Plat and the average lot sizes will be noted on the lot size table.

D. Sec. 9.04.013 Single-Family Residential (SF-10.5) District (Type D Lot)

(a) Purpose. The Single-Family Residential (SF-10.5) district is designed to accommodate single-family residential development on relatively ample lots. The district can be appropriately located near agricultural and single-family residential uses. This district implements the character and intent of the Comprehensive Plan's Suburban Living PlaceType.

(b) Uses. See Table 19: Use Table and all applicable regulations in Division 3.

(c) Dimensional Standards. Development in Single-Family Residential (SF-10.5) district shall follow Table 6: Single- Family Residential (SF-10.5) District Dimensional Standards, as modified.

Table 6: Single-Family Residential (SF-10.5) District Dimensional Standards – Type D

Single-Family Residential (SF-10.5) District Dimensional Standards		
Lot Requirements		
A	Lot Area ~~(min.)~~	10,500 square feet average 8,400 square feet minimum
B	Lot Width (min.) as measured at the front building setback line	70 feet
C	Lot Depth (min.)	120 feet
D	Lot Coverage (max.)	55%
Setback Requirements		
E	Front Yard (min.)	Garage - 25 feet House face / Porch – 15 feet
F	Rear Yard (min.)	25 feet
G	Side Yard (min.)	8 feet
H	Corner Side Yard (min.)	15 feet
Building Requirements		
I	Building Height (max.)	35 feet
Additional Applicable Requirements within the Zoning Ordinance		
Sec. 9.04.041 – Dimensional Regulations Sec. 9.04.042 – Site Design Requirements Sec. 9.04.043 – Parking Sec. 9.04.044 – Loading Sec. 9.04.045 – Landscaping		Sec. 9.04.046 – Screening and Fencing Sec. 9.04.047 – Outdoor Lighting Sec. 9.04.048 – Trash Sec. 9.04.049 – Performance Standards

(d) Special Regulations.

(1) The Single-Family Residential (SF-10.5) district shall not be within 1,200 feet of a Major Highway as designated on the 2045 Master Thoroughfare Plan. This distance shall be measured from the right-of-way centerline to the residential property line.

(2) The corner side yard for "key lots" shall meet the minimum front yard setback requirement.

(3) Average lot size will be calculated based upon the lots of the applicable type on the Final Plat and the average lot sizes will be noted on the lot size table.

E. Sec. 9.04.014 Single-Family Residential (SF-8.4) District (Type E Lot)

(a) Purpose. The Single-Family Residential (SF-8.4) district is designed to accommodate single-family residential development on relatively ample lots. The district can be appropriately located near agricultural and single-family residential uses. This district implements the character and intent of the Comprehensive Plan's Suburban Living PlaceType.

(b) Uses. See Table 19: Use Table and all applicable regulations in Division 3.

(c) Dimensional Standards. Development in the Single-Family Residential (SF-8.4) district shall follow Table 7: Single-Family Residential (SF-8.4) District Dimensional Standards, as modified.

Table 7: Single-Family Residential (SF-8.4) District Dimensional Standards – Type E

Single-Family Residential (SF-8.4) District Dimensional Standards		
Lot Requirements		
A	Lot Area ~~(min.)~~	8,800 square feet average 8,400 square feet minimum
B	Lot Width (min.) as measured at the front building setback line	70 feet
C	Lot Depth (min.)	120 feet
D	Lot Coverage (max.)	55%
Setback Requirements		
E	Front Yard (min.)	Garage - 25 feet House Face / Porch – 15 feet
F	Rear Yard (min.)	20 feet
G	Side Yard (min.)	5 feet
H	Corner Side Yard (min.)	15 feet
Building Requirements		
I	Building Height (max.)	35 feet
Additional Applicable Requirements within the Zoning Ordinance		
Sec. 9.04.041 – Dimensional Regulations Sec. 9.04.042 – Site Design Requirements Sec. 9.04.043 – Parking Sec. 9.04.044 – Loading Sec. 9.04.045 – Landscaping		Sec. 9.04.046 – Screening and Fencing Sec. 9.04.047 – Outdoor Lighting Sec. 9.04.048 – Trash Sec. 9.04.049 – Performance Standards

(d) Special Regulations.

(1) The Single-Family Residential (SF-8.4) district shall not be within 1,200 feet of a Major Highway as designated on the 2045 Master Thoroughfare Plan. This distance shall be measured from the right-of-way centerline to the residential property line.

(2) The corner side yard for "key lots" shall meet the minimum front yard setback requirement.

(3) Average lot size will be calculated based upon the lots of the applicable type on the Final Plat and the average lot sizes will be noted on the lot size table.

F. Sec. 9.04.015 Single-Family Residential (SF-7.2) District (Type F Lot)

(a) Purpose. The Single-Family Residential (SF-7.2) district is designed to accommodate single-family residential development on relatively ample lots. The district can be appropriately located near agricultural and single- family residential uses. This district implements the character and intent of the Comprehensive Plan's Cluster Residential PlaceType.

(b) Uses. See Table 19: Use Table and all applicable regulations in Division 3.

(c) Dimensional Standards. Development in the Single-Family Residential (SF-7.2) district shall follow Table 8: Single-Family Residential (SF-7.2) District Dimensional Standards, as modified.

Table 8: Single-Family Residential (SF-7.2) District Dimensional Standards – Type F

Single-Family Residential (SF-7.2) District Dimensional Standards		
Lot Requirements		
A	Lot Area ~~(min.)~~	7,500 square feet average 7,200 square feet minimum
B	Lot Width (min.) as measured	60 feet

	at the front building setback line	
C	Lot Depth (min.)	120 feet
D	Lot Coverage (max.)	55%
Setback Requirements		
E	Front Yard (min.)	Garage - 25 feet House Face / Porch – 15 feet
F	Rear Yard (min.)	20 feet
G	Side Yard (min.)	5 feet
H	Corner Side Yard (min.)	15 feet
Building Requirements		
I	Building Height (max.)	35 feet
Additional Applicable Requirements within the Zoning Ordinance		
Sec. 9.04.041 – Dimensional Regulations Sec. 9.04.042 – Site Design Requirements Sec. 9.04.043 – Parking Sec. 9.04.044 – Loading Sec. 9.04.045 – Landscaping		Sec. 9.04.046 – Screening and Fencing Sec. 9.04.047 – Outdoor Lighting Sec. 9.04.048 – Trash Sec. 9.04.049 – Performance Standards

(d) Special Regulations.

(1) The Single-Family Residential (SF-7.2) district shall not be within 1,200 feet of a Major Highway as designated on the 2045 Master Thoroughfare Plan. This distance shall be measured from the right-of-way centerline to the residential property line.

(2) The corner side yard for "key lots" shall meet the minimum front yard setback requirement.

(3) Average lot size will be calculated based upon the lots of the applicable type on the Final Plat and the average lot sizes will be noted on the lot size table.

G. Sec. 9.04.016 Single-Family Residential (SF-6.0) District (Type G Lot)

(a) Purpose. The Single-Family Residential (SF-6.0) district is designed to accommodate single-family residential development on relatively smaller lots. The district can be appropriately located near agricultural and single- family residential uses. This district implements the character and intent of the Comprehensive Plan's Cluster Residential PlaceType.

(b) Uses. See Table 19: Use Table and all applicable regulations in Division 3.

(c) Dimensional Standards. Development in the Single-Family Residential (SF-6.0) district shall follow Table 9: Single-Family Residential (SF-6.0) District Dimensional Standards, as modified.

***Table 9: Single-Family* Residential (SF-6.0) District Dimensional Standards – Type G**

Single-Family Residential (SF-6.0) District Dimensional Standards		
Lot Requirements		
A	Lot Area ~~(min.)~~	6,300 square feet average 6,000 square feet minimum
B	Lot Width (min.) as measured at the front building setback line	50 feet
C	Lot Depth (min.)	100 feet
D	Lot Coverage (max.)	55%
Setback Requirements		
E	Front Yard (min.)	Garage - 25 feet House Face / Porch – 10 feet
F	Rear Yard (min.)	20 feet

G	Side Yard (min.)	5 feet
H	Corner Side Yard (min.)	15 feet
Building Requirements		
I	Building Height (max.)	35 feet
Additional Applicable Requirements within the Zoning Ordinance		
Sec. 9.04.041 – Dimensional Regulations Sec. 9.04.042 – Site Design Requirements Sec. 9.04.043 – Parking Sec. 9.04.044 – Loading Sec. 9.04.045 – Landscaping		Sec. 9.04.046 – Screening and Fencing Sec. 9.04.047 – Outdoor Lighting Sec. 9.04.048 – Trash Sec. 9.04.049 – Performance Standards

(d) Special Regulations.

(1) The Single-Family Residential (SF-6.0) district shall not be within 1,200 feet of a Major Highway as designated on the 2045 Master Thoroughfare Plan. This distance shall be measured from the right-of-way centerline to the residential property line.

(2) The corner side yard for "key lots" shall meet the minimum front yard setback requirement.

(3) Average lot size will be calculated based upon the lots of the applicable type on the Final Plat and the average lot sizes will be noted on the lot size table.

H. Sec. 9.04.017 Mixed-Density Residential (MD) District

(a) Purpose. The Mixed-Density Residential (MD) district provides medium-density residential development with diversified housing choices. This district encourages a mix of single-family and two-family residential uses and incentivizes community amenities to form compact, accessible, and walkable neighborhoods. This district implements the character and intent of the Comprehensive Plan's Urban Living PlaceTypes. The Mixed-Density District is defined on the Site to consist of four sub-types: Type H (40 Foot SF), Type I (Single Family Attached including invidual-lot townhome), Two-Family Dwelling (including individual-lot duplex), Type J (Garden Homes).

(b) Uses. See Table 19: Use Table and all applicable regulations in Division 3.

(c) Dimensional Standards. Development in the Mixed-Density Residential (MD) district shall follow Table 10: Mixed-Density Residential (MD) District Dimensional Standards, as modified.

(d) Special Regulations.

(1) The Mixed-Density Residential (MD) district shall not be within 1,200 feet of a Major Highway as designated on the 2045 Master Thoroughfare Plan. This distance shall be measured from the right-of-way centerline to the residential property line.

(2) The corner side yard for "key lots" shall meet the minimum front yard setback requirement.

(3) Zero lot line, 1'/9' split or 3'/7' split may be allowed as long as the overall building to building setback is 10 feet.

(4) Alley loaded garage setbacks (from the alley) shall be measured from the garage door to the edge of pavement of the alley or mews street. The distance shall be either 1) between 3 to 5 feet or 2) more than 20 feet.

(5) Second and third stories may extend a maximum of 2.5 feet into the rear yard setback.

(6) Average lot size will be calculated based upon the lots of the applicable type on the Final Plat and the average lot sizes will be noted on the lot size table.

(7) Any Mixed-Density Residential Unit shall:

- Have permanent foundations
- May utilize modular construction
- Not be manufactured or mobile homes with chassis and wheels

Table 10-A: Mixed-Density Residential (MD) District Dimensional Standards – Type H (40 Foot SF)

Mixed-Density Residential (MD) District Dimensional Standards Type H (40 Foot SF)

Lot Requirements		
A	Lot Area ~~(min.)~~	4,500 square feet average 4,000 square feet minimum
B	Lot Width (min.) as measured at the front building setback line	40 feet
C	Lot Depth (min.)	80 feet
D	Lot Coverage (max.)	65%
Setback Requirements		
E	Front Yard (min.)	10 feet
F	Rear Yard (min.)	10 feet
G	Side Yard (min.)	5 feet
H	Corner Side Yard (min.)	10 feet
I	Garage (min.)	25 feet, See Special Regulations Note
Building Requirements		
J	Building Height (max.)	40 feet
Additional Applicable Requirements within the Zoning Ordinance		
Sec. 9.04.041 – Dimensional Regulations Sec. 9.04.042 – Site Design Requirements Sec. 9.04.043 – Parking Sec. 9.04.044 – Loading Sec. 9.04.045 – Landscaping		Sec. 9.04.046 – Screening and Fencing Sec. 9.04.047 – Outdoor Lighting Sec. 9.04.048 – Trash Sec. 9.04.049 – Performance Standards

Table 10-B: Mixed-Density Residential (MD) District Dimensional Standards – Type I (Single-Family Attached – single DU on single lot including without limitation individual-lot townhome)

Mixed-Density Residential (MD) District Dimensional Standards Type I (Single-Family Attached – single DU on single lot)		
Lot Requirements		
A	Lot Area ~~(min.)~~	2,200 square feet average 2,000 square feet minimum
B	Lot Width (min.) as measured at the front building setback line	25 feet
C	Lot Depth (min.)	80 feet
D	Lot Coverage (max.)	75%
Setback Requirements		
E	Front Yard (min.)	10 feet
F	Rear Yard (min.)	10 feet
G	Side Yard (min.)	N/A
H	Corner Side Yard (min.)	10 feet
I	Garage (min.)	See Special Regulations Note
Building Requirements		
J	Building Height (max.)	40 feet
Additional Applicable Requirements within the Zoning Ordinance		
Sec. 9.04.041 – Dimensional Regulations Sec. 9.04.042 – Site Design Requirements Sec. 9.04.043 – Parking Sec. 9.04.044 – Loading Sec. 9.04.045 – Landscaping		Sec. 9.04.046 – Screening and Fencing Sec. 9.04.047 – Outdoor Lighting Sec. 9.04.048 – Trash Sec. 9.04.049 – Performance Standards

Table 10-C: Mixed-Density Residential (MD) District Dimensional Standards – Two-Family (single DU on single lot including without limitation individual-lot duplex)

Mixed-Density Residential (MD) District Dimensional Standards Two-Family (single DU on single lot)		
Lot Requirements		
A	Lot Area ~~(min.)~~	4,400 square feet average 4,000 square feet minimum
B	Lot Width (min.) as measured at the front building setback line	50 feet
C	Lot Depth (min.)	80 feet
D	Lot Coverage (max.)	75%
Setback Requirements		
E	Front Yard (min.)	10 feet
F	Rear Yard (min.)	10 feet
G	Side Yard (min.)	N/A
H	Corner Side Yard (min.)	10 feet
I	Garage (min.)	See Special Regulations Note
Building Requirements		
J	Building Height (max.)	40 feet
Additional Applicable Requirements within the Zoning Ordinance		
Sec. 9.04.041 – Dimensional Regulations Sec. 9.04.042 – Site Design Requirements Sec. 9.04.043 – Parking Sec. 9.04.044 – Loading Sec. 9.04.045 – Landscaping		Sec. 9.04.046 – Screening and Fencing Sec. 9.04.047 – Outdoor Lighting Sec. 9.04.048 – Trash Sec. 9.04.049 – Performance Standards

Table 10-D: Mixed-Density Residential (MD) District Dimensional Standards – Type J (Garden Homes – single DU on single lot)

Mixed-Density Residential (MD) District Dimensional Standards Type J (Garden Homes – single DU on single lot)		
Lot Requirements		
A	Lot Area ~~(min.)~~	3,300 square feet average 2,800 square feet minimum
B	Lot Width (min.) as measured at the front building setback line	60 feet
C	Lot Depth (min.)	50 feet
D	Lot Coverage (max.)	60%
Setback Requirements		
E	Front Yard (min.)	10 feet (5 feet to property line between units, i.e. 10 feet overall between units)
F	Rear Yard (min.)	10 feet (5 feet to property line between units, i.e. 10 feet overall between units)
G	Side Yard (min.)	5 feet
H	Corner Side Yard (min.)	10 feet
I	Garage (min.)	25 feet (only if facing City Street)
Building Requirements		
J	Building Height (max.)	40 feet

Additional Applicable Requirements within the Zoning Ordinance	
Sec. 9.04.041 – Dimensional Regulations Sec. 9.04.042 – Site Design Requirements Sec. 9.04.043 – Parking Sec. 9.04.044 – Loading Sec. 9.04.045 – Landscaping	Sec. 9.04.046 – Screening and Fencing Sec. 9.04.047 – Outdoor Lighting Sec. 9.04.048 – Trash Sec. 9.04.049 – Performance Standards

I. Single-Family Residential (Cottage Home District)

(a) Purpose. The Single-Family Cottage Residential district is designed to accommodate a single-family residential development of detached units on individual lots. The Cottage homes are intended to be situated adjacent to a shared open space. The district can be appropriately located near agricultural, commercial, and single-family residential uses. This district implements the character and intent of the Comprehensive Plan's Estate Residential PlaceType.

(b) Development in Single-Family Residential (Cottage Home District) requires Site Plan approval to ensure conformance with city development standards.

(c) Dimensional Standards. Development in the Cottage Home district shall follow the Dimensional Standards, as modified.

Single-Family Cottage Residential District Dimensional Standards

Single-Family Cottage Residential District Dimensional Standards		
Lot Requirements		
A	Lot Area (min.)	1,800 SF
B	Building Separation (min.)	10 feet
C	Lot Depth (min.)	45 feet
D	Lot Coverage (max.)	N/A
Setback Requirements		
E	Front Yard (min.)	5 feet
F	Rear Yard (min.)	10 feet
G	Side Yard (min.)	5 feet
H	Corner Side Yard (min.)	10 feet
Building Requirements		
I	Building Height (max.)	40 feet
Additional Applicable Requirements within the Zoning Ordinance		
Sec. 9.04.041 – Dimensional Regulations Sec. 9.04.042 – Site Design Requirements Sec. 9.04.045 – Landscaping		Sec. 9.04.046 – Screening and Fencing Sec. 9.04.047 – Outdoor Lighting Sec. 9.04.048 – Trash Sec. 9.04.049 – Performance Standards

(d) Special Regulations.

(1) Cottage homes shall provide 1.75 parking spots per unit which can be provided as off-street parking and/or on-street parking.

(2) Not be manufactured or mobile homes with chassis and wheels Zero lot line

(3) 1'/9' split or 3'/7' split may be allowed as long as the overall building to building setback is 10 feet.

(4) Any Single-Family Cottage Residential Unit shall:

- Have permanent foundations
- May utilize modular construction
- Not be manufactured or mobile homes with chassis and wheels

J. Sec. 9.04.018 Multifamily Residential (MF) District

(a) Purpose. The Multifamily Residential (MF) District provides for high-density residential development, targeting well-designed multifamily uses serving as a transition between medium-density residential development and commercial nodes. This district encourages multifamily uses with site development characteristics that accommodate open space and access to light and air. This district implements the character and intent of the comprehensive plan's urban living place type.

(b) Uses. See Table 19: Use Table and all applicable regulations in division 3.

(c) Dimensional Standards. Development in the Multifamily Residential (MF) District shall follow Table 11: Multifamily Residential (MF) District Dimensional Standards, as modified.

(d) For the avoidance of doubt, MF District includes the following uses if multiple dwelling units are located on a single lot: Townhome Unit, Duplex Unit, Cottage Home Unit and Condominium Unit.

Table 11: Multifamily Residential (MF) District Dimensional Standards

Multifamily Residential (MF) District Dimensional Standards		
Lot Requirements		
A	Lot Area (min.)	5,000 square feet
B	Lot Width (min.)	50 feet
C	Lot Depth (min.)	120 feet
D	Lot Coverage (max.)	N/A
Setback Requirements		
E	Front Yard (min.)	10 feet
F	Rear Yard (min.)	10 feet
G	Side Yard (min.)	10 feet
H	Corner Side Yard (min.)	25 feet
Building Requirements		
J	Building Height (max.)	85 feet
Additional Applicable Requirements within the Zoning Ordinance		
Sec. 9.04.041 – Dimensional Regulations Sec. 9.04.042 – Site Design Requirements Sec. 9.04.043 – Parking Sec. 9.04.044 – Loading Sec. 9.04.045 – Landscaping		Sec. 9.04.046 – Screening and Fencing Sec. 9.04.047 – Outdoor Lighting Sec. 9.04.048 – Trash Sec. 9.04.049 – Performance Standards

(e) Special Regulations.

(1) Minimum lot areas for attached single-family and two-family dwellings shall be 2,400 square feet per dwelling unit.

(2) Lot widths for a lot containing attached single-family and two-family dwellings shall be no less than 20 feet per ground floor unit plus side yard requirements.

(3) No lot containing multifamily dwelling units shall contain less than 10,000 square feet.

(4) No lot containing a single-unit or duplex unit park shall contain less than 20,000 square feet.

(5) No building in a single-unit or duplex unit park, attached single-family dwelling, two-family dwelling, or townhome unit shall exceed a height of 40 feet.

(6) Any building with multiple stories and greater than 40 feet tall shall comply with the regulations specified in section 9.04.041(h).

(7) When a multifamily dwelling exceeds one story in height, an automatic sprinkler system shall be installed in accordance with existing fire codes and each building shall have two points of entry or exit.

(8) The maximum density for a multifamily dwelling is 100 units per acre.

(9) The maximum density for a townhome unit or single-unit or duplex unit park is 18 units per acre

(10) The corner side yard for "key lots" shall meet the minimum front yard setback requirement.

(11) Any Townhome Unit, Cottage Home Unit, Condominium Unit or Duplex Unit shall:

- Have permanent foundations
- May utilize modular construction

- Not be manufactured or mobile homes with chassis and wheels

(12) A Multi-Family development, including Townhome Unit, Cottage Home Unit, Condominium Unit, and Duplex Unit projects, may choose to satisfy the open space requirements as currently detailed in 9.04.029(c)(b) or may choose to provide open space equal to 15% of the gross development acreage which can be met with one or more of the following options:

- Usable open space and landscape buffers which can include floodplain at no greater slope than 4:1 shall receive a 1:1 square foot credit. Trails and other improvements can be collocated within the usable open space/landscape buffers and shall receive the credit as noted in the following bullets.
- Hardscape improved areas such as equipped children's play areas, pool/spa, dog park, trails, and other similar improvements shall receive 3:1 square footage credit
- Amenities such as amenity centers, gym facilities, and other similar amenities shall receive 3:1 square footage credit

OFT

K. Sec. 9.04.020 Regional Commercial (C-2) District

(a) Purpose. The Regional Commercial (C-2) District provides for medium- to large-scale development of retail, service, entertainment, and office necessary for a regional market. This district primarily facilitates commercial development, like big box and anchor retailers and intensive shopping strip centers that are automobile-oriented and generate high traffic counts. This district implements the character and intent of the comprehensive plan's regional activity center place type.

(b) Uses. See Table 19: Use Table and all applicable regulations in division 3.

(c) Dimensional Standards. Development in the Regional Commercial (C-2) District shall follow Table 13: Regional Commercial (C-2) District Dimensional Standards, as modified.

Table 13: Regional Commercial (C-2) District Dimensional Standards

Regional Commercial (C-2) District Dimensional Standards		
Lot Requirements		
A	Lot Area (min.)	10,000 square feet
B	Lot Width (min.)	60 feet
C	Lot Depth (min.)	N/A
D	Lot Coverage (max.)	N/A
Setback Requirements		
E	Front Yard (min.) (Conventional Context)	25 feet
	Front Yard BTZ (Walkable Context)	0-10 feet
F	Rear Yard (min.)	10 feet
G	Side Yard (min.)	5 feet
H	Corner Side Yard (min.)	15 feet
Building Requirements		
J	Building Height (max.)	85 feet
Additional Applicable Requirements within the Zoning Ordinance		
Sec. 9.04.041 – Dimensional Regulations Sec. 9.04.042 – Site Design Requirements Sec. 9.04.043 – Parking Sec. 9.04.044 – Loading Sec. 9.04.045 – Landscaping		Sec. 9.04.046 – Screening and Fencing Sec. 9.04.047 – Outdoor Lighting Sec. 9.04.048 – Trash Sec. 9.04.049 – Performance Standards

(d) Special Regulations.

(1) Any building with multiple stories and greater than 35 feet tall shall comply with the regulations specified in section 9.04.041(h)

(2) Bar Separation Standard. With respect to Regional Commercial (C-2) and Mixed Use (MU): Section 9.04.032(b)(3)(A) shall be amended to provide for no more restrictions than applicable state law.

(3) Section 9.04.032(b)(3)(B) shall not apply to Zone III.

(4) Front Yard Setbacks may follow one of two contexts: Conventional Context and Walkable Context.

- Conventional Context: Allows for a deeper setback or parking between the front property line and the building, in which case the minimum front yard setback shall be a minimum of twenty-five (25) feet.
- Walkable Context: Allows for a walkable streetscape where buildings front on a minimum eight (8) foot wide sidewalk, in which case the Build-To-Zone shall be between zero (0) and ten (10) feet.

L. Mixed-Use Nodes ("Sherley Squares")

(a) Purpose. The four permitted Mixed-Use Nodes are intended to provide amenities and services at the neighborhood scale. Retail located within these areas should be responsive to its residential context. The Mixed-Use Nodes shall be located on sites not more than two acres, with a building height maximum of two stories and separated by 1,000 feet from another Mixed-Use Node.

(b) Uses. Permitted uses shall include the uses from the Local Commercial (C-1) District.

(c) Dimensional Standards. Development in the Mixed-Use Nodes District shall follow the following Dimensional Standards.

Mixed Use Nodes (Sherley Squares) Criteria

Mixed-Use Nodes District Dimensional Standards		
Lot Requirements		
A	Lot Area (min.)	N/A
B	Lot Width (min.)	25 feet
C	Lot Depth (min.)	N/A
D	Lot Coverage (max.)	N/A
Setback Requirements		
E	Front Yard (min.) (Conventional Context)	25 feet
	Front Yard BTZ (Walkable Context)	0-10 feet
F	Rear Yard (min.)	15 feet
G	Side Yard (min.)	5 feet
H	Corner Side Yard (min.)	10 feet
Building Requirements		
I	Frontage Buildout (min.)	50%
J	Building Height (max.)	40 feet
Additional Applicable Requirements within the Zoning Ordinance		
Sec. 9.04.041 – Dimensional Regulations Sec. 9.04.042 – Site Design Requirements Sec. 9.04.043 – Parking Sec. 9.04.044 – Loading Sec. 9.04.045 – Landscaping		Sec. 9.04.046 – Screening and Fencing Sec. 9.04.047 – Outdoor Lighting Sec. 9.04.048 – Trash Sec. 9.04.049 –Performance Standards

(d) Special Regulations.

- Bar Separation Standard. Mixed Use (MU): Section 9.04.032(b)(3)(A) shall be amended to provide for no more restrictions than applicable state law. Front Yard Setbacks may follow one of two contexts: Conventional Context and Walkable Context.
  - Conventional Context: Allows for a deeper setback or parking between the front property line and the building, in which case the minimum front yard setback shall be a minimum of twenty-five (25) feet.
  - Walkable Context: Allows for a walkable streetscape where buildings front on a minimum eight (8) foot wide sidewalk, in which case the Build-To-Zone shall be between zero (0) and ten (10) feet.

SECTION 7. SITE DESIGN REQUIREMENTS

A. Revise Sec. 9.04.042 Site Design Requirements to read:

(a) Purpose. The purpose of this Section is to establish minimum standards for the appearance of development and corresponding site elements that are recognized as enhancing property values and that are in the interest of the general welfare of the City.

(b) Applicability. This section applies to all single-family, two-family, multi-family, mixed-use, and non-residential developments for new construction. All development shall comply with the requirements established by the Anna Fire Marshal.

(c) **Single-Family Residential Standards**. Residential structures in Zones I & II shall conform to the following residential design standards.

(1) **FOR LOT TYPES A (1/2 acre lots), B (100' lots), C (90' lots) and D (80' lots):**

i. The exterior facades of a main building or structure, excluding glass windows and doors, shall be constructed of seventy-five percent (75%) brick, stone or stucco. Cementitious fiber board is considered masonry, but may only constitute fifty percent (50%) of the area for stories other than the first story. Cementitious fiber board may also be used for architectural features, including window box-outs, bay windows, roof dormers, garage door headers, columns, and chimneys. Cementitious fiber board may also be used for other architectural features as approved by the Director of Development Services.

ii. To promote architectural variety, a maximum of 25% of the homes on lot types A, B, C and D may have up to 100% cementitious fiberboard ("Craftsman Style" homes) so long as the following conditions are met:

- Wrap around covered porches are provided on the first floor that total a minimum of 150 square feet.
- No more than two (2) paint colors may be used on the exterior of the house and they must be earth tones that complement each other (main house vs. trim)
- The surface area of windows surrounded completely by brick may be included within the computation of the exterior brick, brick veneer, stone, or stone veneer wall area of a residence.

(2) **FOR LOT TYPES E (70' lots), F (60' lots), G (50' lots), H (40' lots):**

i. The exterior facades of a main building or structure, excluding glass windows and doors, shall be constructed of fifty percent (50%) brick, stone or stucco. Cementitious fiber board is considered masonry, but may only constitute fifty percent (50%) of the area for stories other than the first story. Cementitious fiber board may also be used for architectural features, including window box-outs, bay windows, roof dormers, garage door headers, columns, and chimneys. Cementitious fiber board may also be used for other architectural features as approved by the Director of Development Services.

ii. To promote architectural variety, a maximum of 35% of the homes on lot types E, F, G and H may have up to 100% cementitious fiberboard ("Craftsman Style" homes) so long as the following conditions are met:

- Wrap around covered porches are provided that total a minimum of 150 square feet.
- No more than two (2) paint colors may be used on the exterior of the house and they must be earth tones that complement each other (main house vs. trim)
- The surface area of windows surrounded completely by brick may be included within the computation of the exterior brick, brick veneer, stone, or stone veneer wall area of a residence.

(3) **Address Plaque**. An address plaque or numbers made of cast stone, metal or other materials used on the exterior of the home of a size that meets Town fire code is required for each Lot.

(4) **Chimneys**. All exposed portions of the fire breast, flu and chimney shall be clad in cementitious lap siding, brick, stone or stucco. Chimneys located on an exterior wall must be 100% brick or stone.

(5) **EIFS**. EIFS (Exterior Insulating and Finish Process) is not allowed.

(6) **Windows**.

i. All window framing shall be bronzed, cream, sand or white anodized aluminum, vinyl or wood.

ii. Window shutters may be used. Window shutters shall be painted, stained wood, or fiberglass.

iii. No reflective window coverings or treatments shall be permitted.

(7) **Garage Doors.** Garage doors shall be constructed of either metal or wood.

(8) **Accessory Structures.** Accessory structures shall be subject to the same exterior construction and architectural standards as the main dwelling.

(9) **Placement of exterior materials**. Notwithstanding the minimum and maximum percentages of building materials allowed on residential homes (shown above), any break from one material to another shall follow the natural lines and design features of the architectural plan. A change from one material to another cannot be arbitrarily assigned without consideration of the specific façade for which it is designed. The Director of Development Services shall have final approval of any residential elevation submitted for construction.

(10) **Alternate stucco architecture**. If a home is designed with a specific architectural style that warrants the use of stucco as the primary exterior material, including but not limited to Mediterranean, Spanish, Southwest, or Modern, then the use of stucco as the primary or exclusive material may be approved by the Director in lieu of other exterior material standards. All elements of the architectural style must be incorporated, including but not limited to clay roof tiles, typical of the style. Residences with primarily stucco finishes shall be accented with heavy wood beams, stonework, or other features to enhance the style. Elevations with no discernable style that simply disregard the required masonry requirement will not be considered. Only three-step stucco (or its equivalent) is allowed.

(11) **Building Articulation.** At least four facade articulation techniques are required on each single-family dwelling to add variety and interest to a building. The following features are acceptable techniques of exterior articulation.

(A) One of the following:

- A base course or plinth course;
- Banding, moldings, or stringcourses;
- Quoins;
- Oriels;
- Cornices;
- Arches;
- Balconies;
- Brackets;
- Shutters;
- Keystones;
- Dormers; or
- Louvers as part of the exterior wall construction. (Quoins and banding shall wrap around the corners of the structure for at least two feet.)
- Carriage style garage doors
- Decorative brick patterning
- Architectural pillars or posts
- Bay Window facing the street
- Brick or Stone chimney on the exterior wall
- Stone Accents
- Covered front porches (minimum (60) square feet covered by main roof or an architectural extension) May encroach into the front setback up to ten feet (10') provided there is a minimum five feet (5') of the front yard space from the back of sidewalk to the front facing façade of the porch. Minimum porch depth is five feet (5').
- Cupulas or turrets
- Dormers or gables
- Roof accent upgrades (e.g. metal, tile, slate, solar tiles)
- Recessed entries a minimum of three (3) feet deeper than main front façade
- Greater than 8:12 primary roof pitch, or variable roof pitches
- Transom windows
- Shutters
- Masonry Arches
- Mixed Masonry patterns
- Coach lights at entrances

- Decorative attic or gable feature, minimum two (2) square feet in size (e.g. vent, window, brick detail)
- Decorative driveway paving (e.g. salt finish, exposed aggregate, or other treatments approved by City Building Official)

(B) Horizontal banding continues the length of the wall that faces a street or other similar highly visible areas.

(C) Front porch of at least 50 square feet.

(D) The installation of at least two (2) coach lights.

(E) Other techniques for building articulation can be substituted if approved by the Director.

(12) **Roof Treatment** ~~Except for porch roofs and shed roofs, pitched roofs shall have a minimum slope of 6" x 12" (six inches vertical rise for every 12 inches horizontal run) and shall have an overhang at least 1' (one foot) beyond the building wall. Porch roofs and shed roofs must have a minimum pitch of 4" x 12".~~

(A) Structures constructed on all lots shall have a composition, slate, metal, clay tile or cement/concrete tile roof.

(B) The color of the composition roof must appear to be weathered wood shingles, black or slate, unless such other color is approved by the Director of Development Services.

(C) Composition roof shingles must be laminated and have a minimum warranty of 30 years.

(D) The main roof pitch of visible roofs shall have a minimum slope of 6" in 12", exclusive of secondary roofs that include patios, porches, bay windows and other features that are accents of the structure and not part of the main roof. Clay tile and cement/concrete tile roofs shall have a minimum slope of 3" in 12". Pitch ends shall be 100% guttered.

(E) Flat or negligible slope roofs are permitted.

(13) **Fenestration.** Windowless exterior elevations that face a public right-of-way or other similar highly visible areas are prohibited. On two-story structures, windows are required on the first and second stories facing a public right-of-way.

(14) **Garages.**

(A) On front entry garages, the face of a garage shall not:

i. Extend more than ten feet beyond the remainder of the front elevation of the primary living area of a dwelling; or

ii. Be over 60% of the total frontage width of a dwelling. Porches or columns are not considered part of the front elevation of the primary living area.

(B) Front Loaded Garages:

i. Minimum: 2-car garage

ii. Maximum: 5-car garage

iii. Garage Doors Facing Street: No more than 3 single-loaded doors are allowed to face the street. Any third street facing garage door must be recessed a minimum of three feet (3') from other garage doors.

iv. One Double Garage Door and One Single Garage Door allowed.

v. Three single garage doors; single garage door nearest to the adjacent side yard must be recessed a minimum of three feet (3') from other garage doors.

vi. Construction Material: Painted Metal, Wood, or Fiberglass

vii. Prohibited: Carports

viii. Exceptions: Tandems are allowed

(C) Rear Loaded Garages:

i. Minimum: 2-car garage

ii. Maximum: 3-car garage tandem

iii. Garage Doors Facing Alley: No more than 2 single-loaded doors or 1 double-loaded door

iv. Construction Material: Painted Metal, Wood, or Fiberglass

v. Prohibited: Carports

vi. Exceptions: Tandems are allowed

(15) **House Repetition / Plan Spacing.**

(A) Same Plan and same elevation can be repeated on the same side of the street every fourth (4th) Lot (see A)

(B) Same Plan and same elevation cannot be repeated across the street or diagonal from any other plan (see B)

(C) Different plan with elevations considered the "same as" another plan and elevation on the same side of the street can be repeated third lot (see E)

(D) Different plan with elevations considered the "same as" another plan and elevation cannot be repeated across the street or diagonal from another plan (see F)

(E) Where a street ends in a cul-de-sac, each dwelling fronting the cul-de-sac shall have a different elevation.

Plan	Elevation	Street Side	# of Lots Between	Key
Same	Same	Same	3	A
Same	Same	Opposite	2	B
Same	Different	Same	2	C
Same	Different	Opposite	1	D
Different	Considered Same As	Same	2	E
Different	Considered Same As	Opposite	1	F

A	D	F	B	A			
F		C	D	E	C	B	E

Notes:

1) The repetition requirements only apply to single family detached units and the street facing units of a Garden Home cluster.
2) Documentation of lot repetition tracking shall be available from the Developer upon request from the City of Anna for verification as-needed.

(d) **Single-Family Attached (including without limitation individual-lot townhome), Garden Home, Two-Family Dwelling (including without limitiaton individual-lot duplex) and Cottage Home Standards**

(1) **FOR LOT TYPES I (Single-Family Attached), J (Garden Homes), Two-Family Dwelling and Cottage Homes:**

i. The exterior facades of a main building or structure, excluding glass windows and doors, shall be constructed of fifty percent (50%) brick, stone or stucco. Cementitious fiber board is considered masonry, but may only constitute fifty percent (50%) of the area for stories other than the first story. Cementitious fiber board may also be used for architectural features, including window box-outs, bay windows, roof dormers, garage door headers, columns, and chimneys. Cementitious fiber board may also be used for other architectural features as approved by the Director of Development Services.

ii. To promote architectural variety the Garden Homes and Cottage Homes may have up to 100% cementitious fiberboard ("Craftsman Style" homes) so long as the following conditions are met:

- Covered porches are provided that total a minimum of 150 square feet.
- No more than two (2) paint colors may be used on the exterior of the house and they must be earth tones that complement each other (main house vs. trim)
- The surface area of windows surrounded completely by brick may be included within the computation of the exterior brick, brick veneer, stone, or stone veneer wall area of a residence.

(2) Building Articulation. At least two facade articulation techniques are required on each detached or attached residential dwelling unit to add variety and interest to a building. The following features are acceptable techniques of exterior articulation.

(A) One of the following:

- A base course or plinth course;
- Banding, moldings, or stringcourses;
- Quoins;
- Oriels;
- Cornices;
- Arches;
- Balconies;

- Brackets;
- Shutters;
- Keystones;
- Dormers; or
- Louvers as part of the exterior wall construction. (Quoins and banding shall wrap around the corners of the structure for at least two feet.)
- Carriage style garage doors
- Decorative brick patterning
- Architectural pillars or posts
- Bay Window facing the street
- Brick or Stone chimney on the exterior wall
- Stone Accents
- Covered front porches (minimum (60) square feet covered by main roof or an architectural extension) May encroach into the front setback up to ten feet (10') provided there is a minimum five feet (5') of the front yard space from the back of sidewalk to the front facing façade of the porch. Minimum porch depth is five feet (5').
- Cupulas or turrets
- Dormers or gables
- Roof accent upgrades (e.g. metal, tile, slate, solar tiles)
- Recessed entries a minimum of three (3) feet deeper than main front façade
- Greater than 8:12 primary roof pitch, or variable roof pitches
- Transom windows
- Shutters
- Masonry Arches
- Mixed Masonry patterns
- Coach lights at entrances
- Decorative attic or gable feature, minimum two (2) square feet in size (e.g. vent, window, brick detail)
- Decorative driveway paving (e.g. salt finish, exposed aggregate, or other treatments approved by City Building Official)

(B) Horizontal banding continuing the length of the wall that faces a street, or other similar highly visible areas.

(C) Front porch of at least 50 square feet.

(D) The installation of at least two (2) coach lights.

(E) Other techniques for building articulation can be substituted if approved by the Director.

~~Roof Treatment. Except for porch roofs and shed roofs, pitched roofs shall have a minimum slope of 6" x 12" (six inches vertical rise for every 12 inches horizontal run) and shall have an overhang at least 1' (one foot) beyond the building wall. Porch roofs and shed roofs must have a minimum pitch of 4" x 12".~~

(3) Fenestration. Windowless exterior elevations facing a public right-of-way or other highly visible areas are prohibited. On two-story structures, windows are required on the first and second stories facing a public right-of-way.

(4) Garages.

(A) On front entry garages, the face of a garage shall not:

i. Extend more than ten feet beyond the remainder of the front elevation of the primary living area of a dwelling; or

ii. Be over 60% of the total frontage width of a dwelling. Porches or columns are not considered part of the front elevation of the primary living area. Two-Family Dwelling and Duplex Units are exempted from this requirement.

(B) Where used Front Loaded Garages shall meet the following standards:

i. Minimum: 1-car garage

ii. Construction Material: Painted Metal, Wood, or Fiberglass

iii. Exceptions: Tandems Garages are allowed. Carports in the rear of the structure are allowed.

(C) Where used Rear Loaded Garages shall meet the following standards:

i. Minimum: 1-car garage

ii. Garage Doors Facing Alley: No more than 2 single-loaded doors or 1 double-loaded door

iii. Construction Material: Painted Metal, Wood, or Fiberglass

iv. Exceptions: Tandems Garages are allowed. Carports in the rear of the structure are allowed. Cottage Homes are not required to have an attached garage.

(5) Unit Repetition.

(A) Single family detached dwelling units with substantially identical exterior elevations can only repeat every four (4) units when fronting the same right-of-way, fire lane, or easement, including both sides of that right-of-way, fire lane, or easement as approved by Developers and secondary review by City as a part of building permit review.

(B) Single family detached dwelling units side by side or across each other within one unit (directly across or "caddy corner") shall not have substantially identical exterior elevations.

(C) The repetition requirements only apply to single family detached units and the street facing units of a Garden Home cluster, Two-Family Dwelling, and Duplex Units, and Cottage Homes and Cottage Home Units, not Single-Family Attached or Townhome Units

(D) For Two-Family Dwelling and Duplex Units and Cottage Homes and Cottage Home Units, project covenants will require (i) a variation in facade articulation (e.g., locations of porches, entrances, and recessed elevations) between immediately adjacent buildings, and (ii) that dwelling units with substantially identical exterior elevations can repeat only once every three (3) units when fronting the same street as approved by Developers and secondary review by City as a part of building permit review.

(E) For Single-Family Attached and Townhome Units project covenants will require a variation in exterior colors or materials between immediately adjacent buildings without requiring different elevations.

(e) **Nonresidential Standards.**

(1) Building Articulation.

(A) The front and two sides of all buildings shall utilize facade offsets and appropriate fenestration to add variation and visual interest to an elevation and to break up long uninterrupted walls or elevations.

(B) Elevations that are 60 ~~50~~ feet or longer in horizontal length require at least one ~~two~~ offset (projection or recess) from the primary facade plane of at least 18 inches deep and 4 feet wide.

(C) The height of those offsets is equal to the building's height at the location of the offset.

(2) Roof Treatment.

(A) Long uninterrupted roof lines and planes shall be broken into smaller segments through the use of scaled gables or dormers, changes in height, changes in roof form, type or planes that typically correspond to offsets in the building's facade, or other appropriate architectural elements.

(B) Parapet roof lines shall feature a well-defined cornice treatment or another similar element to visually cap each building elevation.

(3) Fenestration.

(A) The use of recessed windows, awnings, sills, drip caps, projecting trim casings or surrounds, projecting muntins or mullions, and other elements is generally required.

(B) Any glass with a visible light reflectance rating of 25% or greater is prohibited.

(4) Elements. All buildings or developments shall be required to provide at least two of the following elements:

(A) The primary entrance for all buildings shall feature a protected entry through the use of a recessed entry, porte-cochere, awning, canopy, or similar feature that serves the same purpose. The covering shall be at least three feet in depth when measured from the face of the adjoining facade.

(B) The front and two sides of all building elevations shall feature at least one facade offset (recess or projection) of at least five feet in depth for every 60 ~~50~~ feet of horizontal length.

(C) All primary and secondary building entrances, excluding emergency exits and service doors, feature a recessed entry, canopy, awning, or similar sheltering feature ~~of at least 50 square feet~~.

(f) **Mixed-Use Standards**

(1) Building Articulation.

(A) Buildings facing a local street shall utilize facade offsets and appropriate fenestration to add variation and visual interest to an elevation and to break up long uninterrupted walls or elevations.

(B) Elevations 50 feet or longer in horizontal length require at least two offsets (projection or recess) from the primary facade plane of at least 18 inches deep and 4 feet wide.

(C) The height of those offsets is equal to the building's height at the location of the offset.

(D) Columns and piers shall be spaced no farther apart than the height of the column or pier.

(2) Roof Treatment.

(A) Long uninterrupted roof lines and planes shall be broken into smaller segments through the use of scaled gables or dormers, changes in height, changes in roof form, type or planes that typically correspond to offsets in the building's facade, or other appropriate architectural elements. [Discuss]

(B) Parapet roof lines shall feature a well-defined cornice treatment or another similar element to visually cap each building elevation.

(C) Mansard roofs are prohibited.

(3) Fenestration.

(A) The use of recessed windows, awnings, sills, drip caps, projecting trim casings or surrounds, projecting muntins or mullions, and other elements is required.

(B) Any glass with a visible light reflectance rating of 25% or greater is prohibited.

(4) Ground Floor.

(A) A mixed-use ~~development's ground or first floor is reserved for commercial uses, such as retail, office, and restaurant uses.~~ development shall have ground or first floor frontage and access reserved for commercial uses, such as retail, office, and restaurant uses. Partial use of the first floor for residential, and upper floor use of building for commercial, retail, office, and restaurant is at the discretion of the applicant.

(B) For those mixed-use developments incorporating live-work units, the first floor may be shared with residential and commercial uses.

(C) The ground floor shall have a minimum ceiling height of 14 feet if contains commercial.

(5) Elements. All buildings or developments shall be required to provide at least two of the following elements:

(A) The primary entrance for all buildings shall feature a protected entry through the use of a recessed entry, porte-cochere, awning, canopy, or similar feature that serves the same purpose. The covering shall be at least three feet in depth when measured from the face of the adjoining facade.

(B) All building elevations shall feature at least two facade offsets (recess or projection) of at least five feet in depth for every 50 feet of horizontal length.

(C) All building elevations shall feature at least three distinct roof lines.

(D) All primary and secondary building entrances, excluding emergency exits and service doors, feature a recessed entry, canopy, awning, or similar sheltering feature of at least 50 square feet.

(E) Other similar architectural features as approved by the Director.

(6) Amenities.

(A) A mixed-use development shall provide a minimum of two amenities.

(B) The amenities below may be used to fulfill the requirements. Each amenity counts as one required amenity towards the requirements; however, multiples of the same amenity do not count towards the requirements. Additionally, to provide flexibility in development design, the Director may approve different amenities that agree with the purpose of this Sec. 9.04.042.

(i) Swimming pool (minimum 850 square foot surface area) with cooling deck (minimum ten feet wide in all areas);

(ii) Jacuzzi or hot tub area (minimum 50 square foot area);

(iii) At least two barbeque grills or one grill per 100 units, whichever is greater, with shaded seating areas, all barbeque grills shall be:

a. Serviced with propane or other gas, and

b. Be built into a structure incorporated into an adjacent amenity (i.e., pool or seating area)

(iv) Ramada(s), arbor(s), and/or trellis(es) covering at least 1,000 square feet of recreation space;
(v) A dog park that is at least 5,000 square feet in area that:
  a. Is enclosed by a minimum five-foot tall vinyl-coated chain link fence;
  b. Uses grass, wood chips, or a combination of the two as surface materials; and
  c. Provides at least one dog waste station that includes a bag dispenser and waste receptacle installed along the perimeter of the enclosure for every 2,500 square feet of the associated dog park.
(vi) Fitness center/weight room (minimum 500 square feet);
(vii) Business center (minimum 500 square feet); (viii)Media room (minimum 500 square feet).
(viii) A Plaza with hardscape features at least 3,000 square feet in area that is designed for use by, and to complement, the ground floor mixed-use
(ix) A civic center or other publicly accessible facility (e.g., reading room)

SECTION 8. ZONING LANDSCAPING CHANGES

Revise 9.04.045 Landscaping to read:

(1) Residential Development.
  (A) Generally.
    (i) Applicants are required to plant the amount established in Table 27: Residential Planting Requirements per lot prior to obtaining a certificate of occupancy.
    (ii) Existing quality trees of at least three-inch caliper size located on the lot shall count to meet this standard if appropriate tree protection measures have been followed.
  (B) Requirements.
    (i) Trees selected from the canopy tree list in this Section shall be planted on all single-family and two-family lots.
    (ii) At least one of the trees must be placed in the front yard of the lot. A street tree shall be considered a front yard tree.
    (iii) For all residential properties, common areas, and open space lots, applicants are required to plant one canopy tree per 40 linear feet of street frontage. Trees may be grouped or clustered to facilitate site design.
    (iv) The following minimum standards apply as established in Table 27: Residential Planting Requirements. An applicant shall choose one of three planting options. An applicant may plant the required canopy trees, ornamental trees, or a combination of canopy and ornamental trees specified in Table 27: Residential Planting Requirements. If a street tree agreement is in place then those trees will count towards the totals in Table 27:Residential Planting Requirements. Street trees may be canopy trees. To accommodate modified Mixed-Density Residential types the requirement shall follow the following standards:
      a. Garden Homes: One canopy tree per unit for homes not fronting on the street. Street fronting units shall utilize the street tree to meet the yard tree requirement.
      b. Two-Family Dwelling: One tree per two attached Two-Family units shall satisfy the Two-Family front yard planting requirement.
      c. Cottage Homes: One canopy tree or one ornamental tree for every two units.
      d. Single-Family Attached: One Canopy Tree for every two Single-Family Attached units.
    (v) Minor modifications: The Director of Development Services or his/her designee is authorized to administratively approve modifications to the landscaping requirements necessitated by conflicting requirements for public or franchise utilities or drainage improvements.

Revise 9.04.045.d.12 to read:

~~No tree shall be plated closer than four feet to a right-of-way line nor closer than eight feet to a public utility line (water or sewer), unless no other alternative is available. Further, a landscaping area in which trees are to be provided shall not conflict with a utility easement, unless no alternative is available.~~ Tree planting in proximity to right-of-way shall be governed by the street tree exhibits included in **Exhibit D** of the Development Agreement.

SECTION 9. ARTICLE 9.05 SIGN ORDINANCE

1. **Section 9.05.018 Detached Signs**

(d) Subdivision Entry Signs

Definition.

(1)

Subdivision Entry Sign. A sign which may be a freestanding monument or attached to a subdivision wall located at the entry of a platted subdivision from a local, collector, or arterial street.

(2) Standards.

Generally. Table 3-7 establishes the standards for subdivision entry signs.

Table 3-7: Subdivision Entry Sign Standards

Sign District → Requirement ↓	**AE**	**SF**	**MR**	**CM**	**MU**	**DT**	**IN**
General							
Allowed?	Y	Y	Y	N	Y	N	Y
Permit Required?	Y	Y	Y	--	Y	--	Y
Number per entrance (max.)	1	2	2	--	2	--	2
Dimensions							
Sign Area (max.)	150 sf	200 sf	150 sf	--	~~150 sf~~ 200 sf	--	150 sf
Sign Height (max).	6 ft	~~6 ft~~ 15 ft	6 ft	--	~~6 ft~~ 15 ft	--	8 ft

Setbacks							
From ROW	5 ft	5 ft	5 ft	--	5 ft	--	5 ft
Features							
Electronic Message Center	N	N	N	--	N	--	N
Changeable Copy	N	N	N	--	N	--	N
Channel Letters	Y	Y	Y	--	Y	--	Y
Internal Illumination	N	N	N	--	N	--	N
External Illumination	Y	Y	Y	--	Y	--	Y
Halo Illumination	Y	Y	Y	--	Y	--	Y
Additional Information							
Key	Y = yes, a permit is required or the feature is allowed | N = no/ not allowed | NR = the sign type or characteristic is allowed for nonresidential uses only | sf = square feet | ft = feet | "-" = the standard does not apply						
Sign District Summary	AE = AG district and ETJ | SF = SF-20.0- SF-6.0 districts | MR = MD and MF districts | CM = C-1 and C-2 districts |MU = MU district | DT = DT district | IN = I-1 and I-2 districts						

(B) Number and Location

(i) Two (2) subdivision entry signs may be located at the intersection of a collector or arterial street and an entry street or private driveway into a subdivision. ~~The signs shall be configured as follows.~~

a. ~~Two (2) signs with one (1) sign face each located on opposite sides of the entry street private driveway;~~

~~b. One (1) sign with two (2) faces located within a landscaped areas dividing two (2) one-way entry streets or private driveways;~~

~~c. One (1) sign located on one (1) side of the entry street or private driveway; or~~

~~d. One (1) sign located on an archway above the entry street or private driveway~~

(ii) Subdivision entrances from a right-of-way greater than 60 feet shall require signage. Secondary entrance connecting to other neighborhoods may be allowed but are not required.

(C) Design and Installation.

(i) Subdivision entry signs shall be constructed with stone, brick, concrete, metal, routed wood planks or beams, or similar durable, weatherproof materials.

(ii) All subdivision entry signs shall be landscaped around the base of the sign in an area equal to four square feet for each square foot of sign areas. In case where the location of the sign could not accommodate such landscape areas, the area may be reduced up to 50% at the Directors' discretion.

(iii) When electrical service is provided to a subdivision entry sign, all electrical service shall be underground

SECTION 11. DEFINITIONS

Sec. 9.04.081 Land Use Terms

Agritainment:

Events and activities that allow for education, culinary experiences, recreation, entertainment, and tourism that is in conjunction with on-going agricultural activities on-site (examples include corn mazes, hayrides, classes, food festivals and petting zoos).

Garden Homes:

A configuration of single family detached units that are in a cluster of 4-6 units with a shared access easement driveway and a minimum of 2 homes facing the street. See conceptual example figure with approximate dimensions and attributes.

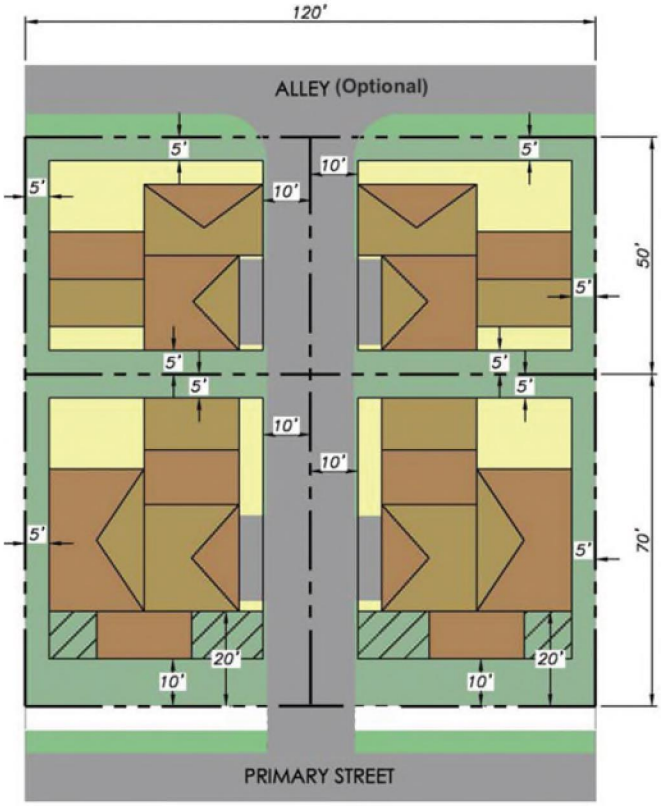

Garden Home Unit:

A configuration of single family detached units, on a shared lot, that are in a cluster of 4-6 units with a shared access easement driveway and a minimum of 2 homes facing the street. See conceptual example figure above with approximate dimensions and attributes except that for a Garden Home Unit it would be a single shared lot.

Mini-Warehouse/Public Storage:

~~A facility used for storage of goods and/or materials with separate access to individual storage units by persons renting the individual units.~~

A building containing separate, individual, self-storage units of 500 square feet or less for rent or lease.

The conduct of sales, business, or any activity other than storage or ancillary goods and services (e.g., insurance, moving boxes, tape or other equipment) shall be prohibited within any individual storage unit.

Shared Workspace:

An accessory commercial use that is a shared work area that may be in an enclosed building and/or outdoor spaces intended as an amenity to support small-scale employment, hobbies, or crafts in proximity to residential uses.

Cottage Home Unit:

A configuration of single family detached units, on a shared lot, with the same architectural style as the Cottage Home Residential District.

SECTION 11. ATTACHMENTS

A. Attachment Road Network and Street Sections

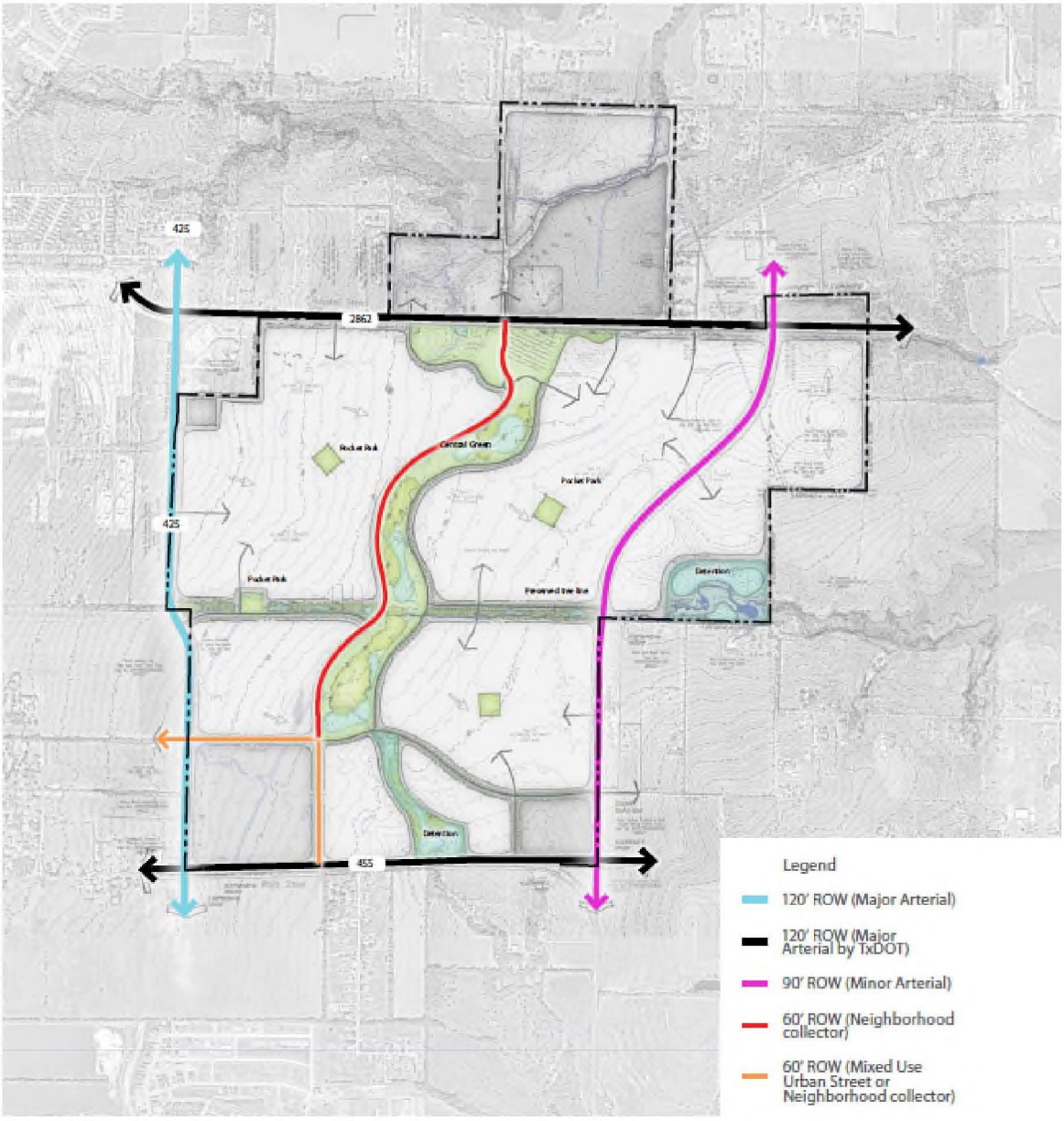

TBG

Sherley Farms

Anna, Texas
04/25/24

street section map

The information shown is conceptual and is subject to change as part of future construction plans and platting submittals. Street classifications, and alignments are subject to future traffic studies / traffic impact analysis (TIA's).

TBG
2001 Bryan St. Suite 1450,
Dallas, Texas 75201

[214] 744 0757 tbgpartners.com

0 800' 1600'

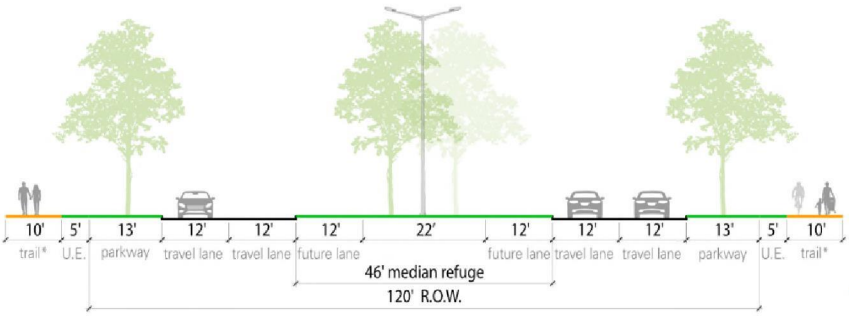

Major Arterial

*entire landscape buffer to be dedicated for public trail access easement
*median trees will comply with all relevant City of Anna visibility standards and consist of species other than Oak.

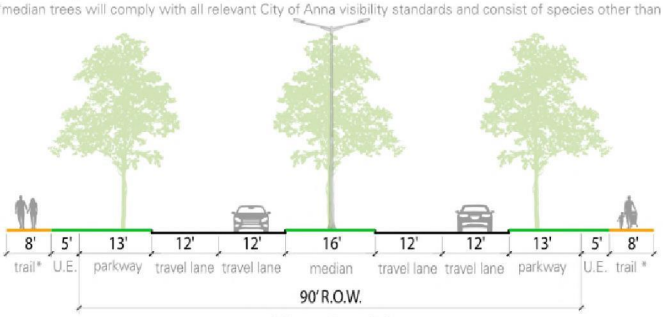

Minor Arterial

*entire landscape buffer to be dedicated for public trail access easement
*median trees will comply with all relevant City of Anna visibility standards and consist of species other than Oak.

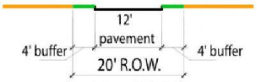

Residential Alley

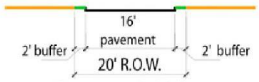

Commercial Alley

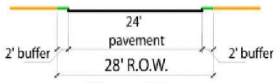

Mews Alley

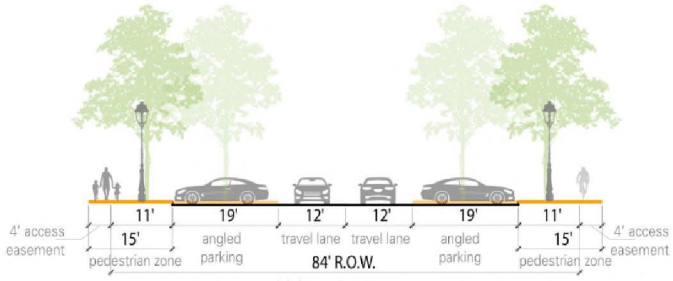

Urban Avenue*

allowable section for this development, location to be determined at preliminary plan stage

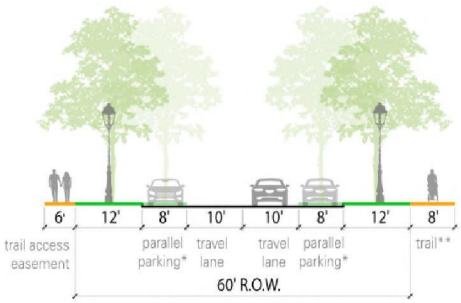

Neighborhood Collector

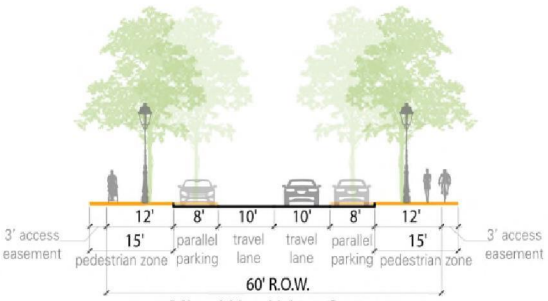

Mixed Use Urban Street

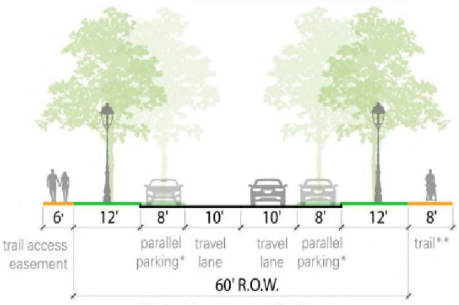

Neighborhood Collector

*stripe dedicated parallel parking lane, curb bulb out at intersection of residential street
**trail on park side of road can meander



Neighborhood Street

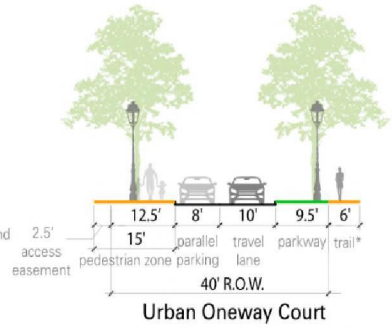

Urban Oneway Court

*trail on urban park/plaza side of road can meander

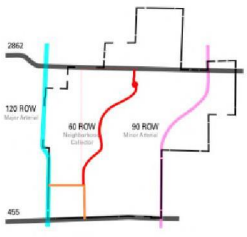

TBG

sherley farms

street sections

Anna, Texas
03/11/2024

0 10' 20' 40'

B. Street Tree Details

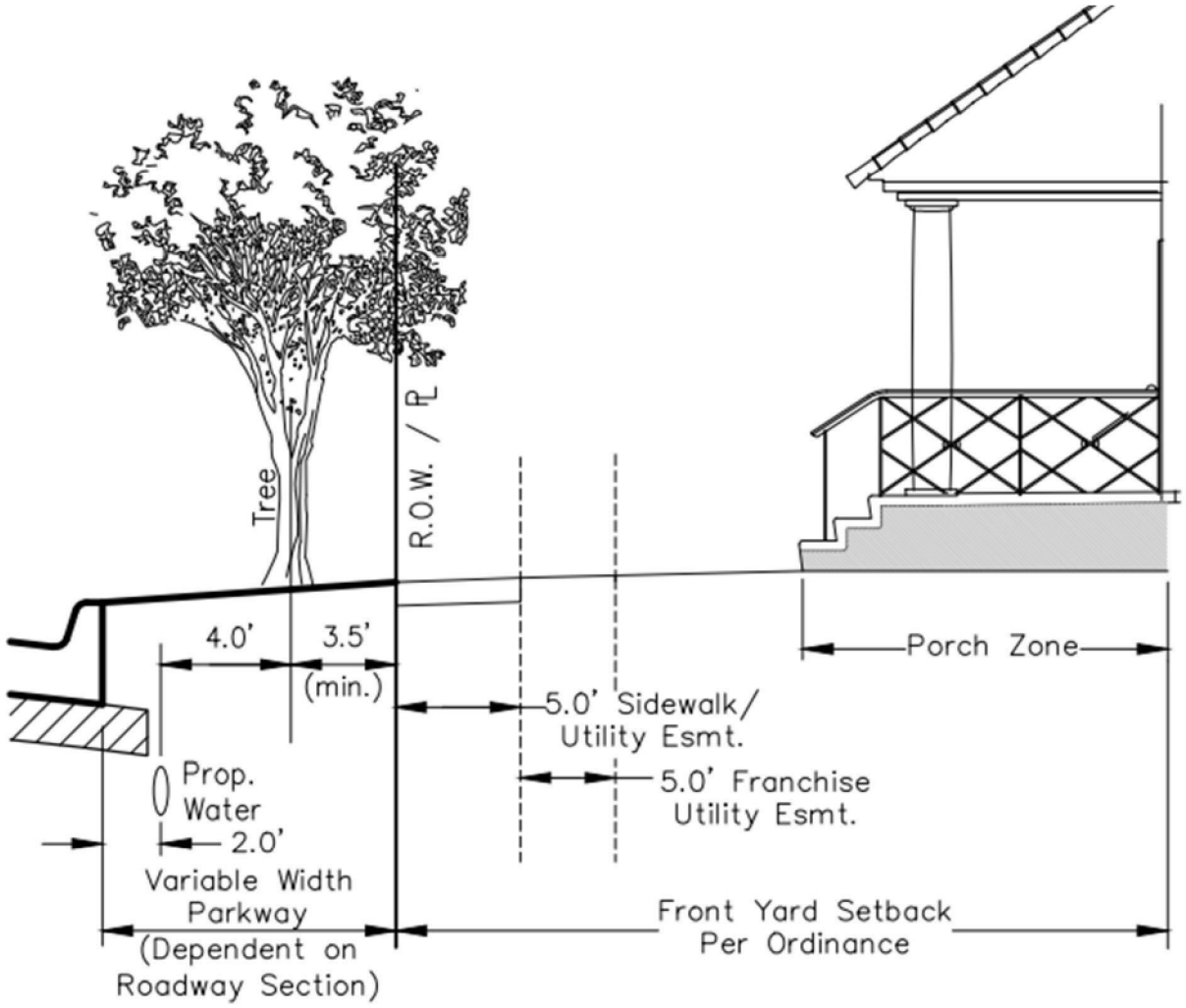

Note:
1. See typical root barrier detail for specifics on root barrier layout.
2. Street tree location shall comply with all City of Anna visibility requirements.

STREET TREE LAYOUT DETAIL

(N.T.S.)

PAGE 1 OF 1

SPIARS ENGINEERING & SURVEYING

Drawing: G:\2023 JOBS\23-288 Shirley Farms\CAD\Misc\23-288 Street Tree Layout Detail.dwg Saved By: jvargas Save Time: 10/7/2024 10:28:16 AM Plotted by: jvargas Plot Date: 10/7/2024 10:28 AM

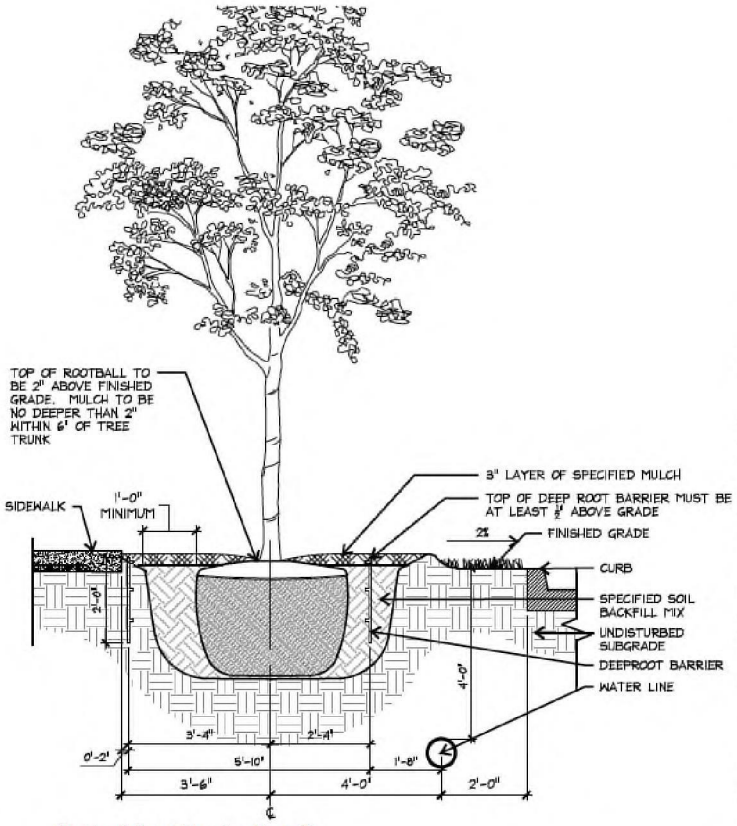

1 Typical Root Barrier Detail

PLAN/SECTION

NOT TO SCALE

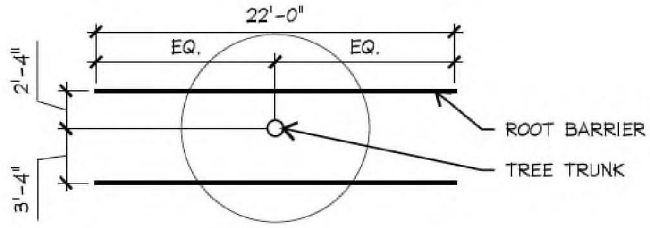

PLAN VIEW

Surround Style Planting with Deeproot Universal Barriers

When selecting the Surround style planting application you will have the greatest success by following these simple steps as illustrated below:

A. Prepare the initial planting hole as illustrated below. This is based upon the combination of desired barrier diameter and depth. Consider if drainage devices or amendments are needed to correct any adverse soil or planting conditions in the backfill area.

B. Assemble the appropriate number of DeepRoot Universal Barrier panels. The vertical root deflecting ribs on the panel must face inward, toward the root ball. (This is very important, otherwise the roots will become girdled by traveling around the smooth walled surface)

C. Next place the barrier in the center of the planting hole, keeping in mind that the double top edge of the barrier should be positioned approximately 1/2" (13mm) above grade. This helps retard potential root overgrowth. Failing to position the top edge above grade can allow root overgrowth which can lead to uprooted hardscapes.

D. Backfill and compact with soil inside the barrier to the level where the bottom of the root ball will be when positioned correctly with the crown of the root ball approximately 1" (26mm) above grade.

E. Remove the tree from its container, or cut away the top portion of burlap and position in the center of the barrier. Complete the backfill of the soil. Distribute evenly to maintain the shape of the barrier and compact the backfill every 4"-6" (10cm–15cm). Roots will die quickly if left exposed to the elements so keep exposure of the roots to a minimum.

F. If staking or guying is required we recommend using the soft, safe and economical alternative to traditional wire and hose, ArborTie (see www.deeproot.com for details)

G. If the tree(s) will be subject to maintenance work such as lawn mowing or weed trimming we strongly recommend the installation of ArborGard+ Tree Trunk Protectors which are placed around the base of young trees to protect them from damage by weed trimmers, lawn mowers and small rodents. (See www.deeproot.com)

H. Water and follow proper tree maintenance practices.

Trees do require care and nurturing after planting. Consult with your local supplier for proper care procedures for the species you are planting. The planting instructions given here are by no means a comprehensive guide. Rather they are general guidelines to planting with DeepRoot Barriers and a survey of current planting methods. Conditions will vary however and it is recommended that an Arborist be consulted before planting.

For additional information please visit our website at www.deeproot.com

For information regarding distributors please call: 1 800 ILV ROOT (458.7668). For help with drainage or other difficult installation questions please call DeepRoot Technical Support at: 1 800 ROOT TEK (766.8835).

Exhibit E

Authorized Improvements and Budgeted Costs

Exhibit E - Authorized Improvements and Budgeted Costs

10/7/2024

Sherley Farms PID
Anna, Texas
Collin County

2,578 Lots
Typical Lot Size Varies

Prepared for

Tellus Group LLC

Prepared by

SPIARS ENGINEERING & SURVEYING

Job #23.288

765 Custer Road, Suite 100
Plano, Texas 75075
Ph. 972.422.0077, Fax 972.422.0075
TBPE# F-2121

Exhibit E - Authorized Improvements and Budgeted Costs

Development Phase	PID Direct Costs				
	Lot Count	Cost Per Lot	Residential	Box Culvert & Detention	Total PID Direct
Phase 1	423	$52,063	$20,884,308	$1,138,483	$22,022,792
Phase 2	307	$52,529	$14,945,666	$1,180,672	$16,126,338
Phase 3	419	$48,737	$20,241,658	$179,200	$20,420,858
Phase 4	316	$62,172	$18,171,352	$1,475,072	$19,646,424
Phase 5	421	$53,579	$21,332,215	$1,224,704	$22,556,919
Phase 6	494	$47,777	$22,608,500	$993,536	$23,602,036
Phase 7	198	$71,503	$14,157,684	$0	$14,157,684
TOTAL	2578	$53,737	$132,341,384	$6,191,667	$138,533,051

Notes:
1. This summary table only shows PID eligible costs.
2. It is assumed that only Direct PID costs will be reimbursed. Items that would be classified as Major Improvements have been excluded.
3. Turn lanes, collector paving, box culverts, and detention costs have been included. It is assumed that they will be categorized as direct costs.

Phase 1 Sherley Farms: Anna, Texas

Total Number of Lots: 423 **Based on Lot Count and Centerlines**

100's: 0 **TH: 0** **40's: 82** **50's: 171** **60's: 137** **70's: 33**

	Total	Quantity	Unit	Unit Cost
ON-SITE CONSTRUCTION COSTS				
HARD COSTS				
Erosion Control	$231,360.00	23,136	LF	$10.00
SWPPP/Inspection	$15,000.00	1	LS	$15,000.00
Construction Materials Testing	$232,650.00	423	Lot	$550.00
Excavation	$380,700.00	423	Lot	$4,500.00
Rock Surcharge	$860,310.00	1	LS	$860,310.00
Water	$2,679,120.00	22,326	LF	$120.00
Storm Sewer	$3,701,760.00	23,136	LF	$160.00
Sanitary Sewer	$2,544,960.00	23,136	LF	$110.00
Paving (Residential)	$5,581,500.00	22,326	LF	$250.00
Paving (Collector)	$243,000.00	810	LF	$300.00
Paving (Mews Alley)	$321,400.00	1,607	LF	$200.00
Paving (Alley)	$0.00	0	LF	$100.00
Turn Lanes (City)	$200,000.00	5	EA	$40,000.00
Turn Lanes (TXDOT)	$0.00	0	EA	$200,000.00
Signage (Includes CBUs)	$231,360.00	23,136	LF	$10.00
Subtotal Hard Costs	$17,223,120.00			
On-Site Contingency (10%)	$1,722,312.00			
Total Hard Costs	$18,945,432.00		Lot	$44,788.26
SOFT COSTS				
Preliminary Engineering	$63,450.00	423	Lot	$150.00
Engineering, Construction Staking, Administrative	$1,015,200.00	423	Lot	$2,400.00
Survey (topo, tree, boundary, easements, etc.)	$38,990.00	1	LS	$38,990.00
Soil Testing - Final Geotech	$83,550.00	111	Acre	$750.00
Re-Staking	$21,150.00	423	Lot	$50.00
Flood Study	$50,000.00	1	LS	$50,000.00
Environmental Studies	$20,000.00	1	LS	$20,000.00
Inspection Fees (4.0%)	$646,536.40	1	LS	$646,536.40
Total Soft Costs	$1,938,876.40		Lot	$4,583.63
RESIDENTIAL PID DIRECT COST	**$20,884,308.40**		**Lot**	**$ 49,371.89**

Phase 2 Sherley Farms: Anna, Texas

Total Number of Lots: 307 **Based on Lot Count and Centerlines**

100's: 0 **TH: 0** **40's: 0** **50's: 134** **60's: 149** **70's: 24**

	Total	Quantity	Unit	Unit Cost
ON-SITE CONSTRUCTION COSTS				
HARD COSTS				
Erosion Control	$171,390.00	17,139	LF	$10.00
SWPPP/Inspection	$15,000.00	1	LS	$15,000.00
Construction Materials Testing	$168,850.00	307	Lot	$550.00
Excavation	$276,300.00	307	Lot	$4,500.00
Rock Surcharge	$567,060.00	1	LS	$567,060.00
Water	$2,056,680.00	17,139	LF	$120.00
Storm Sewer	$2,742,240.00	17,139	LF	$160.00
Sanitary Sewer	$1,380,940.00	12,554	LF	$110.00
Paving (Residential)	$4,284,750.00	17,139	LF	$250.00
Paving (Collector)	$0.00	0	LF	$300.00
Paving (Mews Alley)	$114,600.00	573	LF	$200.00
Paving (Alley)	$0.00	0	LF	$100.00
Turn Lanes (City)	$0.00	0	EA	$40,000.00
Turn Lanes (TXDOT)	$400,000.00	2	EA	$200,000.00
Signage (Includes CBUs)	$171,390.00	17,139	LF	$10.00
Subtotal Hard Costs	$12,349,200.00			
On-Site Contingency (10%)	$1,234,920.00			
Total Hard Costs	$13,584,120.00		Lot	$44,247.95
SOFT COSTS				
Preliminary Engineering	$46,050.00	307	Lot	$150.00
Engineering, Construction Staking, Administrative	$736,800.00	307	Lot	$2,400.00
Survey (topo, tree, boundary, easements, etc.)	$28,840.00	1	LS	$28,840.00
Soil Testing - Final Geotech	$61,800.00	82	Acre	$750.00
Re-Staking	$15,350.00	307	Lot	$50.00
Flood Study	$20,000.00	1	LS	$20,000.00
Environmental Studies	$0.00	0	LS	$0.00
Inspection Fees (4.0%)	$452,706.40	1	LS	$452,706.40
Total Soft Costs	$1,361,546.40		Lot	$4,435.00
RESIDENTIAL PID DIRECT COST	**$14,945,666.40**		**Lot**	**$ 48,682.95**

Phase 3 Sherley Farms: Anna, Texas

Total Number of Lots: 419 **Based on Lot Count and Centerlines**

100's: 0 **TH: 0** **40's: 155** **50's: 102** **60's: 162** **70's: 0**

	Total	Quantity	Unit	Unit Cost
ON-SITE CONSTRUCTION COSTS				
HARD COSTS				
Erosion Control	$211,780.00	21,178	LF	$10.00
SWPPP/Inspection	$15,000.00	1	LS	$15,000.00
Construction Materials Testing	$230,450.00	419	Lot	$550.00
Excavation	$377,100.00	419	Lot	$4,500.00
Rock Surcharge	$772,476.00	1	LS	$772,476.00
Water	$2,252,040.00	18,767	LF	$120.00
Storm Sewer	$3,388,480.00	21,178	LF	$160.00
Sanitary Sewer	$2,329,580.00	21,178	LF	$110.00
Paving (Residential)	$4,691,750.00	18,767	LF	$250.00
Paving (Collector)	$723,300.00	2,411	LF	$300.00
Paving (Mews Alley)	$752,000.00	3,760	LF	$200.00
Paving (Alley)	$163,800.00	1,638	LF	$100.00
Turn Lanes (City)	$0.00	0	EA	$40,000.00
Turn Lanes (TXDOT)	$600,000.00	3	EA	$200,000.00
Signage (Includes CBUs)	$211,780.00	21,178	LF	$10.00
Subtotal Hard Costs	$16,719,536.00			
On-Site Contingency (10%)	$1,671,953.60			
Total Hard Costs	$18,391,489.60		Lot	$43,893.77
SOFT COSTS				
Preliminary Engineering	$62,850.00	419	Lot	$150.00
Engineering, Construction Staking, Administrative	$1,005,600.00	419	Lot	$2,400.00
Survey (topo, tree, boundary, easements, etc.)	$41,160.00	1	LS	$41,160.00
Soil Testing - Final Geotech	$88,200.00	118	Acre	$750.00
Re-Staking	$20,950.00	419	Lot	$50.00
Flood Study	$20,000.00	1	LS	$20,000.00
Environmental Studies	$0.00	0	LS	$0.00
Inspection Fees (4.0%)	$611,408.24	1	LS	$611,408.24
Total Soft Costs	$1,850,168.24		Lot	$4,415.68
RESIDENTIAL PID DIRECT COST	**$20,241,657.84**		**Lot**	**$ 48,309.45**

Phase 4 Sherley Farms: Anna, Texas

Total Number of Lots: 316 **Based on Lot Count and Centerlines**

100's: 0 **TH: 19** **40's: 85** **50's: 71** **60's: 120** **70's: 21**

	Total	Quantity	Unit	Unit Cost
ON-SITE CONSTRUCTION COSTS				
HARD COSTS				
Erosion Control	$202,180.00	20,218	LF	$10.00
SWPPP/Inspection	$15,000.00	1	LS	$15,000.00
Construction Materials Testing	$173,800.00	316	Lot	$550.00
Excavation	$284,400.00	316	Lot	$4,500.00
Rock Surcharge	$732,786.00	1	LS	$732,786.00
Water	$2,087,640.00	17,397	LF	$120.00
Storm Sewer	$3,234,880.00	20,218	LF	$160.00
Sanitary Sewer	$2,223,980.00	20,218	LF	$110.00
Paving (Residential)	$4,349,250.00	17,397	LF	$250.00
Paving (Collector)	$846,300.00	2,821	LF	$300.00
Paving (Mews Alley)	$564,600.00	2,823	LF	$200.00
Paving (Alley)	$56,300.00	563	LF	$100.00
Turn Lanes (City)	$160,000.00	4	EA	$40,000.00
Turn Lanes (TXDOT)	$0.00	0	EA	$200,000.00
Signage (Includes CBUs)	$202,180.00	20,218	LF	$10.00
Subtotal Hard Costs	$15,133,296.00			
On-Site Contingency (10%)	$1,513,329.60			
Total Hard Costs	$16,646,625.60		Lot	$52,679.19
SOFT COSTS				
Preliminary Engineering	$47,400.00	316	Lot	$150.00
Engineering, Construction Staking, Administrative	$758,400.00	316	Lot	$2,400.00
Survey (topo, tree, boundary, easements, etc.)	$35,385.00	1	LS	$35,385.00
Soil Testing - Final Geotech	$75,825.00	101	Acre	$750.00
Re-Staking	$15,800.00	316	Lot	$50.00
Flood Study	$20,000.00	1	LS	$20,000.00
Environmental Studies	$0.00	0	LS	$0.00
Inspection Fees (4.0%)	$571,916.64	1	LS	$571,916.64
Total Soft Costs	$1,524,726.64		Lot	$4,825.08
RESIDENTIAL PID DIRECT COST	**$18,171,352.24**		**Lot**	**$ 57,504.28**

Phase 5 Sherley Farms: Anna, Texas

Total Number of Lots: 421 **Based on Lot Count and Centerlines**

100's: 0 **TH: 0** **40's: 173** **50's: 139** **60's: 81** **70's: 28**

	Total	Quantity	Unit	Unit Cost
ON-SITE CONSTRUCTION COSTS				
HARD COSTS				
Erosion Control	$230,850.00	23,085	LF	$10.00
SWPPP/Inspection	$15,000.00	1	LS	$15,000.00
Construction Materials Testing	$231,550.00	421	Lot	$550.00
Excavation	$378,900.00	421	Lot	$4,500.00
Rock Surcharge	$813,556.50	1	LS	$813,556.50
Water	$2,625,120.00	21,876	LF	$120.00
Storm Sewer	$3,693,600.00	23,085	LF	$160.00
Sanitary Sewer	$2,264,350.00	20,585	LF	$110.00
Paving (Residential)	$5,469,000.00	21,876	LF	$250.00
Paving (Collector)	$362,700.00	1,209	LF	$300.00
Paving (Mews Alley)	$1,087,000.00	5,435	LF	$200.00
Paving (Alley)	$57,600.00	576	LF	$100.00
Turn Lanes (City)	$200,000.00	5	EA	$40,000.00
Turn Lanes (TXDOT)	$0.00	0	EA	$200,000.00
Signage (Includes CBUs)	$230,850.00	23,085	LF	$10.00
Subtotal Hard Costs	$17,660,076.50			
On-Site Contingency (10%)	$1,766,007.65			
Total Hard Costs	$19,426,084.15		Lot	$46,142.72
SOFT COSTS				
Preliminary Engineering	$63,150.00	421	Lot	$150.00
Engineering, Construction Staking, Administrative	$1,010,400.00	421	Lot	$2,400.00
Survey (topo, tree, boundary, easements, etc.)	$40,530.00	1	LS	$40,530.00
Soil Testing - Final Geotech	$86,850.00	116	Acre	$750.00
Re-Staking	$21,050.00	421	Lot	$50.00
Flood Study	$20,000.00	1	LS	$20,000.00
Environmental Studies	$0.00	0	LS	$0.00
Inspection Fees (4.0%)	$664,151.06	1	LS	$664,151.06
Total Soft Costs	$1,906,131.06		Lot	$4,527.63
RESIDENTIAL PID DIRECT COST	**$21,332,215.21**		**Lot**	**$ 50,670.34**

Phase 6 Sherley Farms: Anna, Texas

Total Number of Lots: 494 **Based on Lot Count and Centerlines**

100's: 0 **TH: 101** **40's: 143** **50's: 123** **60's: 91** **70's: 36**

	Total	Quantity	Unit	Unit Cost
ON-SITE CONSTRUCTION COSTS				
HARD COSTS				
Erosion Control	$238,060.00	23,806	LF	$10.00
SWPPP/Inspection	$15,000.00	1	LS	$15,000.00
Construction Materials Testing	$271,700.00	494	Lot	$550.00
Excavation	$444,600.00	494	Lot	$4,500.00
Rock Surcharge	$795,220.50	1	LS	$795,220.50
Water	$2,195,760.00	18,298	LF	$120.00
Storm Sewer	$3,808,960.00	23,806	LF	$160.00
Sanitary Sewer	$2,299,110.00	20,901	LF	$110.00
Paving (Residential)	$4,574,500.00	18,298	LF	$250.00
Paving (Collector)	$1,652,400.00	5,508	LF	$300.00
Paving (Mews Alley)	$817,600.00	4,088	LF	$200.00
Paving (Alley)	$409,700.00	4,097	LF	$100.00
Turn Lanes (City)	$80,000.00	2	EA	$40,000.00
Turn Lanes (TXDOT)	$800,000.00	4	EA	$200,000.00
Signage (Includes CBUs)	$238,060.00	23,806	LF	$10.00
Subtotal Hard Costs	$18,640,670.50			
On-Site Contingency (10%)	$1,864,067.05			
Total Hard Costs	$20,504,737.55		Lot	$41,507.57
SOFT COSTS				
Preliminary Engineering	$74,100.00	494	Lot	$150.00
Engineering, Construction Staking, Administrative	$1,185,600.00	494	Lot	$2,400.00
Survey (topo, tree, boundary, easements, etc.)	$40,635.00	1	LS	$40,635.00
Soil Testing - Final Geotech	$87,075.00	116	Acre	$750.00
Re-Staking	$24,700.00	494	Lot	$50.00
Flood Study	$20,000.00	1	LS	$20,000.00
Environmental Studies	$0.00	0	LS	$0.00
Inspection Fees (4.0%)	$671,652.42	1	LS	$671,652.42
Total Soft Costs	$2,103,762.42		Lot	$4,258.63
RESIDENTIAL PID DIRECT COST	**$22,608,499.97**		**Lot**	**$ 45,766.19**

Phase 7 Sherley Farms: Anna, Texas

Total Number of Lots: 198 **Based on Lot Count and Centerlines**

100's: 150 **TH: 0** **40's: 0** **50's: 0** **60's: 0** **70's: 48**

	Total	Quantity	Unit	Unit Cost
ON-SITE CONSTRUCTION COSTS				
HARD COSTS				
Erosion Control	$163,040.00	16,304	LF	$10.00
SWPPP/Inspection	$15,000.00	1	LS	$15,000.00
Construction Materials Testing	$108,900.00	198	Lot	$550.00
Excavation	$178,200.00	198	Lot	$4,500.00
Rock Surcharge	$611,400.00	1	LS	$611,400.00
Water	$1,956,480.00	16,304	LF	$120.00
Storm Sewer	$2,608,640.00	16,304	LF	$160.00
Sanitary Sewer	$1,793,440.00	16,304	LF	$110.00
Paving (Residential)	$4,076,000.00	16,304	LF	$250.00
Paving (Collector)	$0.00	0	LF	$300.00
Paving (Mews Alley)	$0.00	0	LF	$200.00
Paving (Alley)	$0.00	0	LF	$100.00
Turn Lanes (City)	$200,000.00	5	EA	$40,000.00
Turn Lanes (TXDOT)	$0.00	0	EA	$200,000.00
Signage (Includes CBUs)	$163,040.00	16,304	LF	$10.00
Subtotal Hard Costs	$11,874,140.00			
On-Site Contingency (10%)	$1,187,414.00			
Total Hard Costs	$13,061,554.00		Lot	$65,967.44
SOFT COSTS				
Preliminary Engineering	$29,700.00	198	Lot	$150.00
Engineering, Construction Staking, Administrative	$475,200.00	198	Lot	$2,400.00
Survey (topo, tree, boundary, easements, etc.)	$35,945.00	1	LS	$35,945.00
Soil Testing - Final Geotech	$77,025.00	103	Acre	$750.00
Re-Staking	$9,900.00	198	Lot	$50.00
Flood Study	$20,000.00	1	LS	$20,000.00
Environmental Studies	$0.00	0	LS	$0.00
Inspection Fees (4.0%)	$448,360.00	1	LS	$448,360.00
Total Soft Costs	$1,096,130.00		Lot	$5,536.01
RESIDENTIAL PID DIRECT COST	**$14,157,684.00**		**Lot**	**$ 71,503.45**

Sherley Farms: Anna, Texas

Box Culvert & Detention Budget Summary

Quantities by Phase Development Item	5'X5' RCB	9'X8' RCB	6'x6' RCB	7'x6' RCB	8'X6' RCB	8'X7' RCB	Excavation	Headwall	Minor Outfall Structures	Emergency Spillway	Asphalt Removal and Replacement	Trench Safety	Storm Sewer Line Testing and TV Insp.	Phase Total	Construction Contingency 10.00%	Design & Staking 12.00%	Inspection Fees 4.00%	Maintenance Bond 2.00%	Total Cost
Phase 1	0	240	0	0	0	0	100000	2	0	1	0	240	240	$889,440	$88,944	$106,733	$35,578	$17,789	$1,138,483
Phase 2	0	0	0	0	400	0	0	6	0	0	0	400	400	$922,400	$92,240	$110,688	$36,896	$18,448	$1,180,672
Phase 3	0	0	0	0	0	0	30000	0	1	0	0	0	0	$140,000	$14,000	$16,800	$5,600	$2,800	$179,200
Phase 4	400	0	0	0	0	0	150000	2	0	0	1500	400	400	$1,152,400	$115,240	$138,288	$46,096	$23,048	$1,475,072
Phase 5	0	0	200	100	0	0	30000	6	1	0	0	300	300	$956,800	$95,680	$114,816	$38,272	$19,136	$1,224,704
Phase 6	200	0	0	0	0	0	25000	4	2	1	0	200	200	$776,200	$77,620	$93,144	$31,048	$15,524	$993,536
Phase 7	0	0	0	0	0	0	0	0	0	0	0	0	0	$0	$0	$0	$0	$0	$0
Units	LF	LF	LF	LF	LF	LF	CY	EA	SY	SY	SY	LF	LF						
Unit Cost	$500	$1,200	$700	$750	$800	$850	$3	$100,000	$50,000	$100,000	$200	$1	$5						
Total Quantity	600	240	200	100	400	0	335,000	20	4	2	1,500	1,540	1,540						
TOTAL PROJECT COST	$300,000	$288,000	$140,000	$75,000	$320,000	$0	$1,005,000	$2,000,000	$200,000	$200,000	$300,000	$1,540	$7,700	**$4,837,240**	**$483,724**	**$580,469**	**$193,490**	**$96,745**	**$6,191,667**

SPIARS
ENGINEERING & SURVEYING

Sherley Farms - Assumptions

1. Estimate assumes that collector paving and drainage, box culvert, and stormwater detention improvements will be classified as direct improvements.

2. Landscape, amenity, and trail costs excluded from this estimate.

3. Estimate assumes that left turn lanes and/or escrows will be required at all entrances to development.

4. Estimate assumes utilites are stubbed to seller retained parcels and multifamily tract.

5. Estimate assumes that CR 424 will have a 36' B-B setion. Assumes that CR 424 extends across the entire property. This is a reduced section as compared with Anna's Master Thoroughfare Plan.

6. Estimate assumes the following street sections:12' E-E alleys, 27' B-B residential and 36' B-B collector.

7. Estimate reflects all eligible PID direct costs.

8. Drainage design accounts for undeveloped offsite flows. It is assumed adjacent properties will be required to detain when they develop.

9. Assumes no decelaration lanes will be required.

10. Assumes no right turn lanes will be required.

11. Assumes culverts under FM 455 will require a portion of the existing TxDOT road to be demolished and re-installed.

Exhibit F-1

Major Sewer Improvements

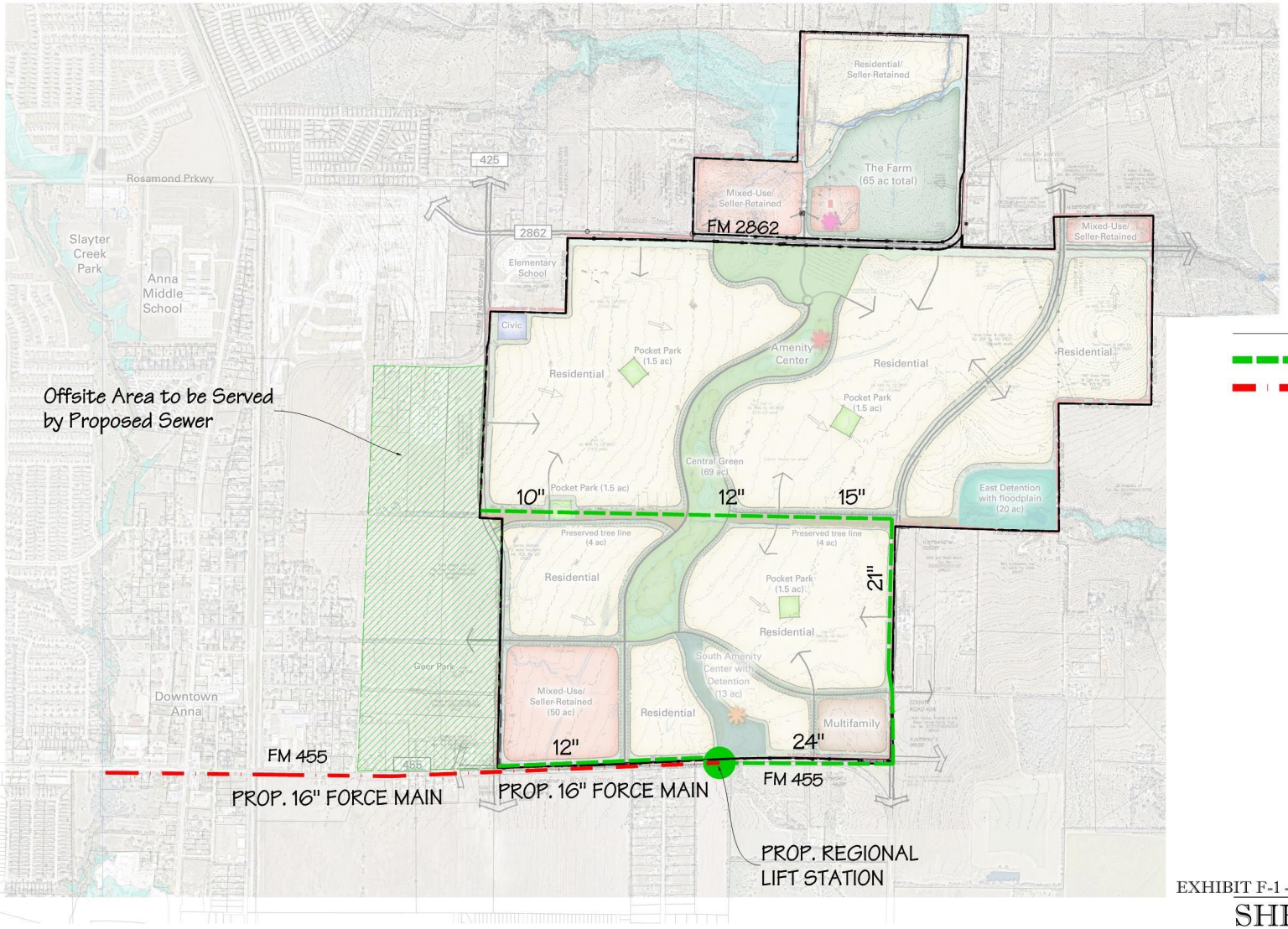

N
W E
S

0 300 600 1200
1 inch = 600 ft.

LEGEND

= PROPOSED DEVELOPER SEWER

= PROPOSED FORCE MAIN

Note:

1. Alignments shown are conceptual and subject to change.
2. Pipe sizes are approximated for reference. Actual pipe sizes to be determined at time of final design.

EXHIBIT F-1 - MAJOR SEWER IMPROVEMENTS

SHERLEY FARMS

CITY OF ANNA, COLLIN COUNTY, TEXAS
G. MORRISON SURVEY ~ ABSTRACT NO. 559

OCTOBER OF 2024

SPIARS ENGINEERING & SURVEYING
765 Custer Road, Suite 100 • Plano, TX 75075 • 972.422.0077
TBPE No F-2121 • TBLPS No. F-10043100 • www.spiarseng.com

Exhibit F-2

City Constructed Sewer Improvements

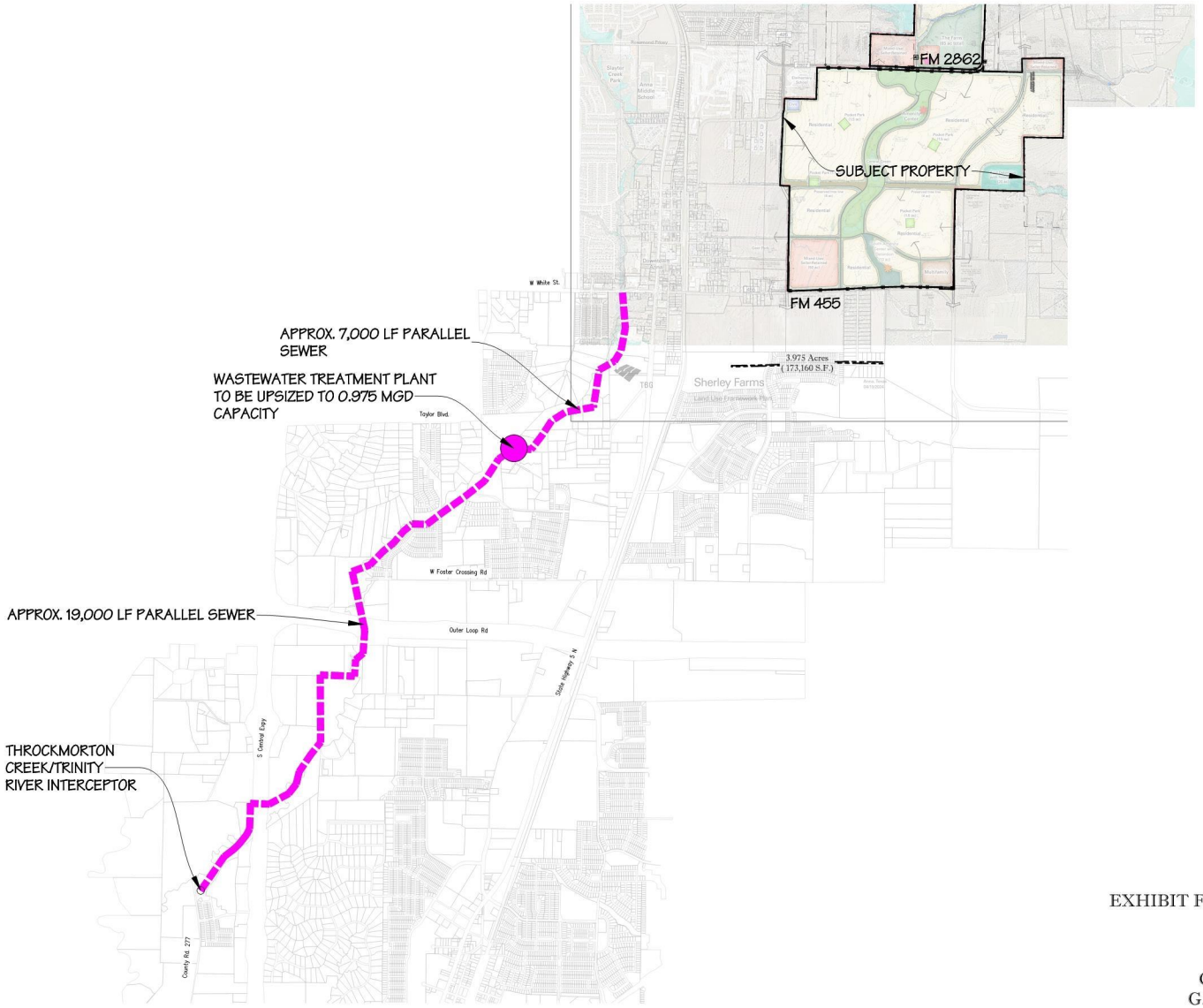

N
W E
S

0 300 600 1200
1 inch = 600 ft.

LEGEND

■■■■■ = PROPOSED CITY IMPROVEMENTS

Note:
1. Alignments shown are conceptual and subject to change.

EXHIBIT F-2 - CITY CONSTRUCTED SEWER IMPROVEMENTS

SHERLEY FARMS

CITY OF ANNA, COLLIN COUNTY, TEXAS
G. MORRISON SURVEY ~ ABSTRACT NO. 559

OCTOBER OF 2024

SPIARS ENGINEERING & SURVEYING
765 Custer Road, Suite 100 • Plano, TX 75075 • 972.422.0077
TBPE No F-2121 • TBLPS No. F-10043100 • www.spiarseng.com

Exhibit F-3

Sewer Improvements Schedule

EXHIBIT F-3
SEWER IMPROVEMENTS SCHEDULE

Construction Phase	Segment/Part	Facility Classification	Description	Cost Responsibility *(Design, Construction, Easement Acquisition, and Construction Management)*	Construction Funding	Timing	Equivalent Dwelling Units (EDUs) Construction Completion Timing	Equivalent Dwelling Units (EDUs) Capacity Allocated by City to Developer upon Completion of Phase Improvements
Phase 1	**1**	Lift Station	Onsite 6.7 MGD Peak Flow Lift Station	Developer	Developer (Reimbursable per Agreement)	Design Start - Preliminary Plat Approval	**Prior to 1 EDU**	**488 (488 Overall)**
	2	Force Main	8,000 LF of 16" force main along FM 455	Developer (City to provide condemnation assistance if needed)	Developer (Reimbursable per Agreement)	Design Start - Preliminary Plat Approval		
	3	Onsite Trunk Sewer	5,400 LF (21"-24") Onsite Trunk Sewer to serve Phase 1 of Sherley Farms	Developer	Developer (Reimbursable per Agreement)	Design Start - Preliminary Plat Approval		
Phase 2	**4**	Onsite Trunk Sewer	2,100 LF (12"-15") Onsite Trunk Sewer to Serve Phase 2 of Sherley Farms	Developer	Developer (Reimbursable per Agreement)	Design Start - Phase 2 Preliminary Plat Approval	**Prior to 489 EDUs**	**469 (957 Overall)**
Phase 3	**5**	Onsite Trunk Sewer	3,100 LF (30"-36") Trunk Sewer From FM 455 to Slayter Creek Treatment Plant	Developer	Developer (Reimbursable per Agreement)	Design & Easement Acquisition - upon approval of this DA	**Prior to 958 EDUs**	**470 (1,427 Overall)**
	6	Offsite Trunk Sewer	7,000 LF (10") Trunk Sewer From FM 455 to Slayter Creek Treatment Plant	City	City	Design & Easement Acquisition - upon the effective date of this agreement		
Phase 4	**7**	Offsite Treatment	Relocate Package Plant From Hurricane Creek Treatment Plant to Slayter Creek Treatment Plant or Install another package plant	City	City	Design - Currently Underway	**Prior to 1,428 EDUs**	**928 (2,355 Overall)**
Phase 5	**8**	Renegotiate Anna/Melissa Sewer Discharge Agreement	City of Anna to negotiate with City of Melissa to obtain increased allowable discharges covering Sherley Farms	City	City	Formal Negotiations to Begin upon the effective date of this agreement	**Prior to 2,356 EDUs**	**1,568 (3923 Overall)**
Phase 6	**9**	Offsite Trunk Sewer	19,000 LF of offsite trunk sewer downstream of Slayter Creek WWTP	City	City	Design - 8 months after the effective date of this agreement		

Notes:

1. Timing is based on initial City draft of deal points.
2. Phasing doesn't necessarily correspond to actual project phasing

Exhibit G

Major Water Improvements

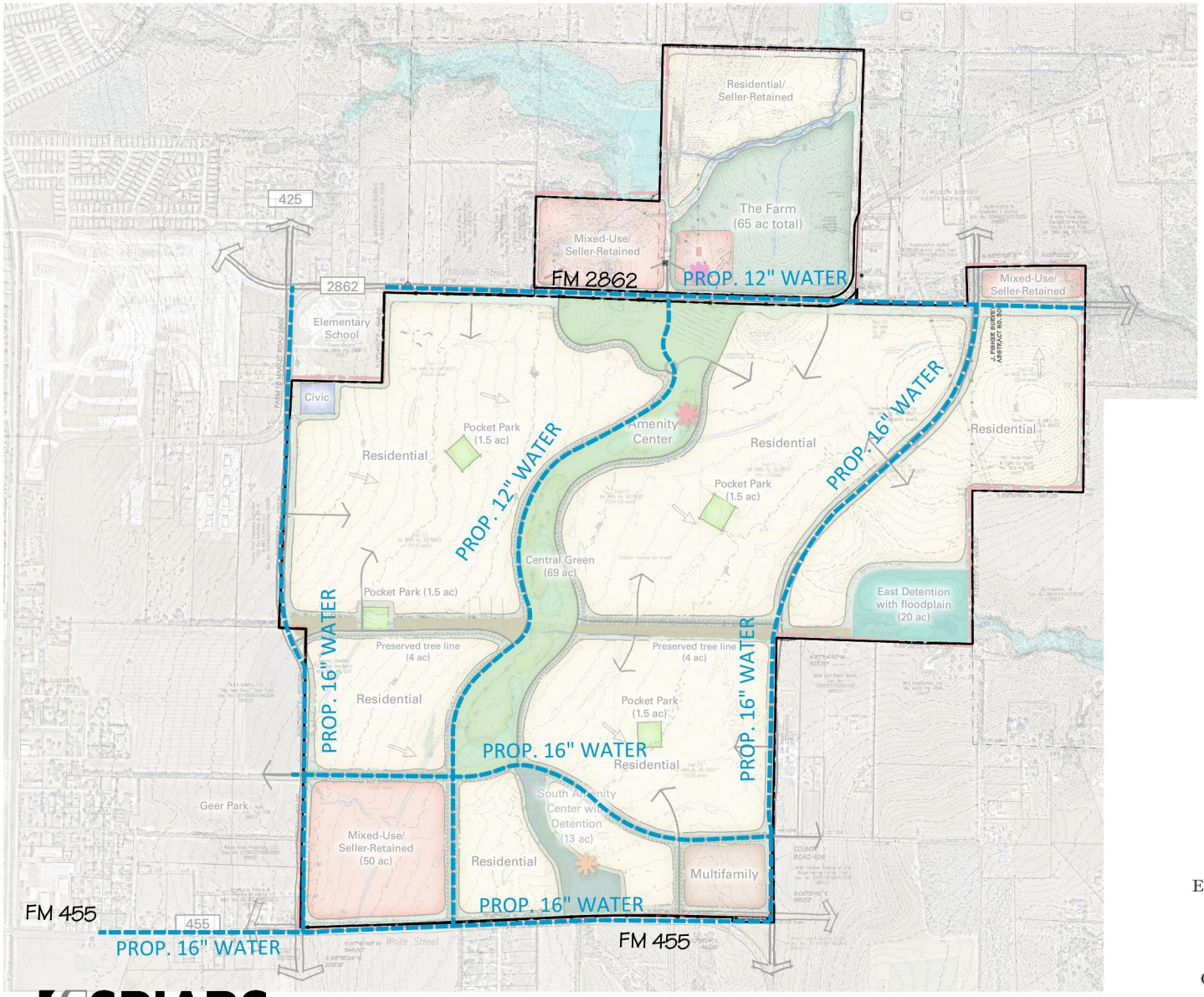

N
W E
S

0 250 500 1000
1 inch = 500 ft.

LEGEND

■■■■■■■ = PROPOSED DEVELOPER WATER

Note:
1. Alignments shown are conceptual and subject to change.

EXHIBIT G - MAJOR WATER IMPROVEMENTS

SHERLEY FARMS

CITY OF ANNA, COLLIN COUNTY, TEXAS
G. MORRISON SURVEY ~ ABSTRACT NO. 559

OCTOBER OF 2024

SPIARS ENGINEERING & SURVEYING
765 Custer Road, Suite 100 • Plano, TX 75075 • 972.422.0077
TBPE No F-2121 • TBLPS No. F-10043100 • www.spiarseng.com

Exhibit H

Major Roadway Improvements

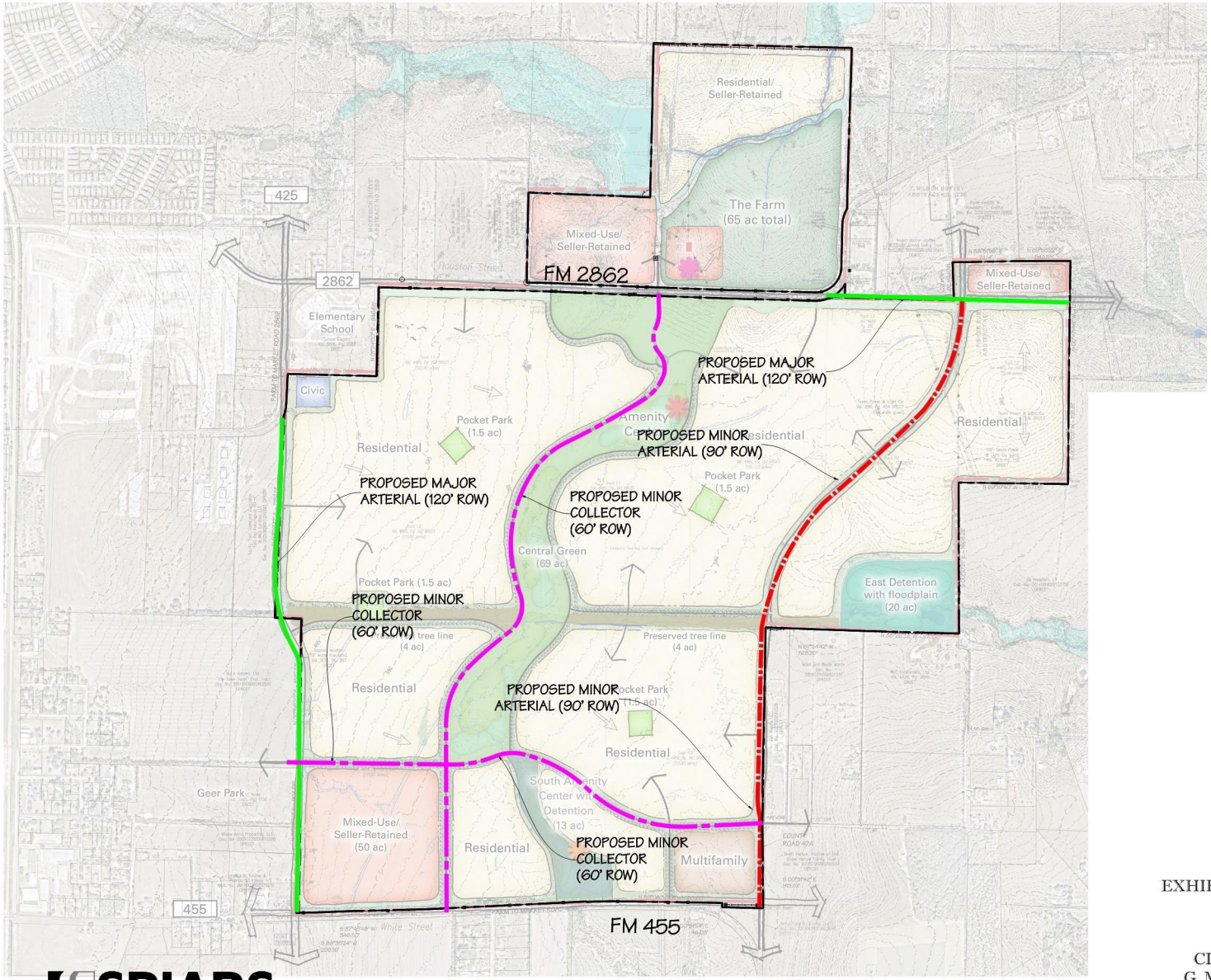

N
W E
S

0 250 500 1000
1 inch = 500 ft.

LEGEND

= PROPOSED MINOR ARTERIAL
= PROPOSED MAJOR ARTERIAL
= PROPOSED MINOR COLLECTOR

Note:

1. Alignments shown are conceptual and subject to change.
2. Developer shall construct 2 Lanes (25' B-B) of shown divided arterials.

EXHIBIT H - MAJOR ROADWAY IMPROVEMENTS

SHERLEY FARMS

CITY OF ANNA, COLLIN COUNTY, TEXAS
G. MORRISON SURVEY ~ ABSTRACT NO. 559

OCTOBER OF 2024

SPIARS
ENGINEERING & SURVEYING
765 Custer Road, Suite 100 • Plano, TX 75075 • 972.422.0077
TBPE No F-2121 • TBLPS No. F-10043100 • www.spiarseng.com

Exhibit H-1

Proposed Thoroughfare Plan Revision

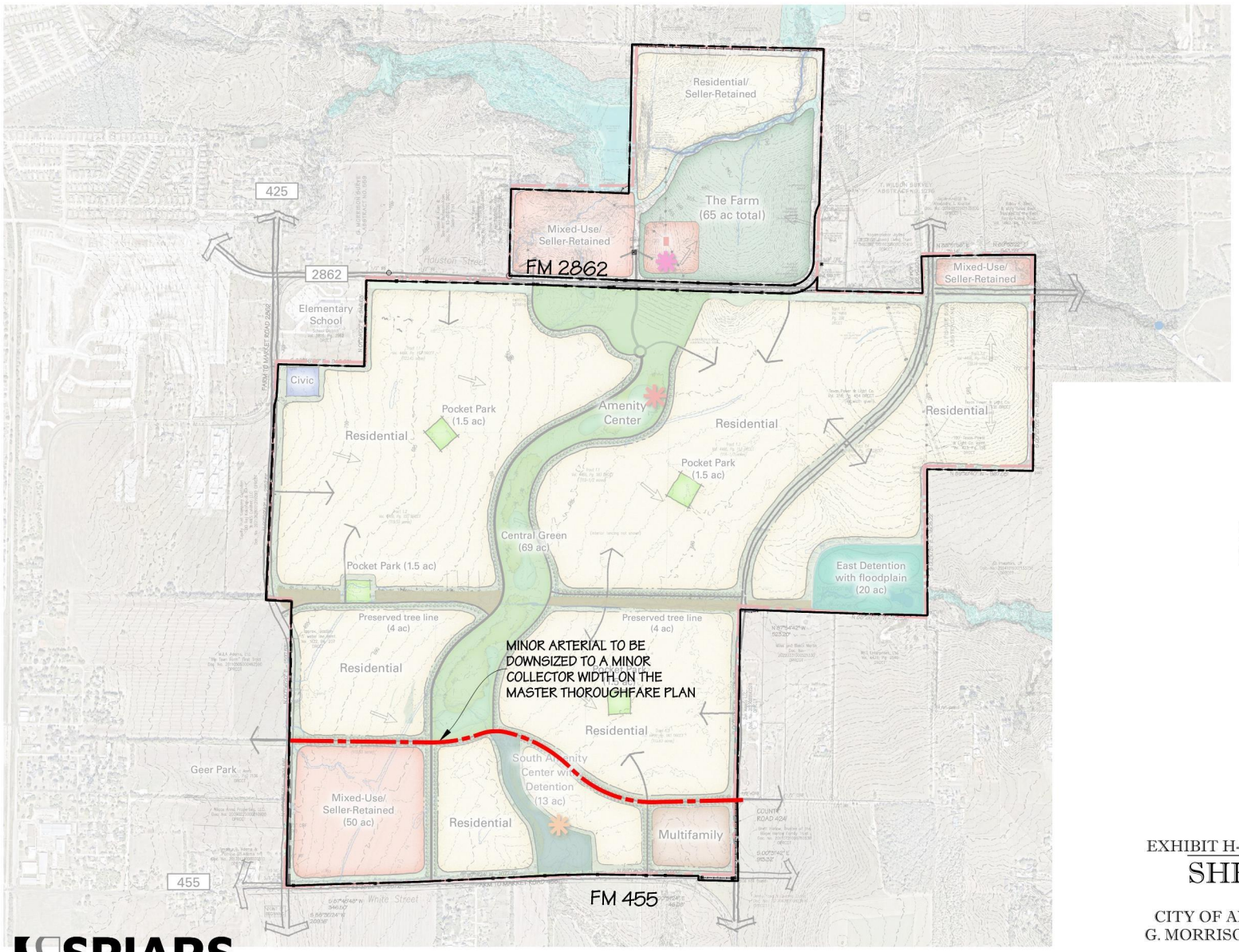

Note:

1. Downsizing of the roadway shown to a minor collector width is subject to results of a traffic impact analysis.

EXHIBIT H-1 - THOROUGHFARE REVISION

SHERLEY FARMS

CITY OF ANNA, COLLIN COUNTY, TEXAS
G. MORRISON SURVEY ~ ABSTRACT NO. 559

OCTOBER OF 2024

SPIARS
ENGINEERING & SURVEYING
765 Custer Road, Suite 100 • Plano, TX 75075 • 972.422.0077
TBPE No F-2121 • TBLPS No. F-10043100 • www.spiarseng.com

Exhibit I

Conceptual Amenity Depictions




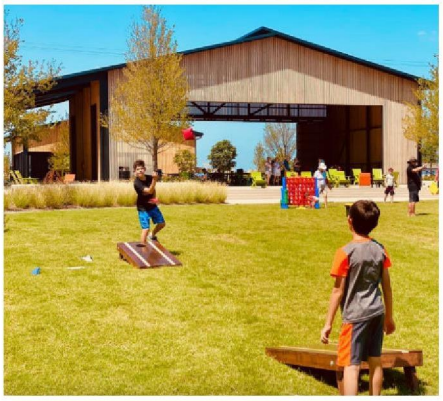











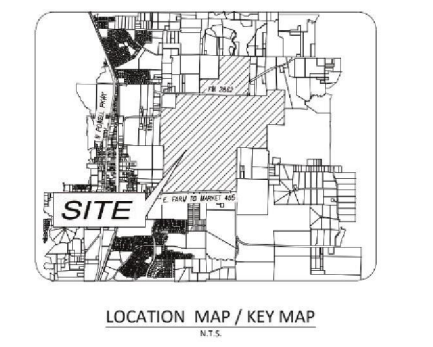
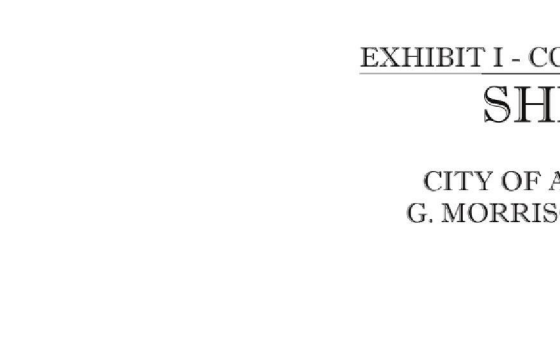
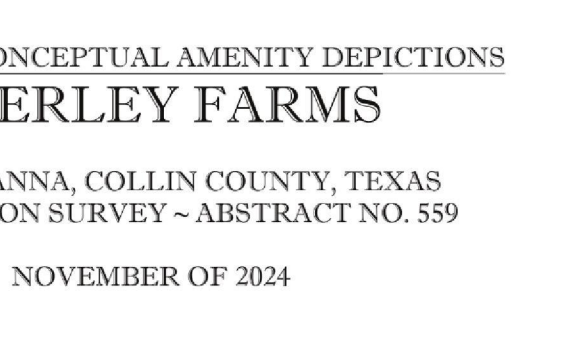

LOCATION MAP / KEY MAP
N.T.S.

EXHIBIT I - CONCEPTUAL AMENITY DEPICTIONS

SHERLEY FARMS

CITY OF ANNA, COLLIN COUNTY, TEXAS
G. MORRISON SURVEY ~ ABSTRACT NO. 559

NOVEMBER OF 2024

Exhibit J

Trail and Open Space Improvements

Public Open Space Summary		
	Central Green	±74 ac
	Pocket Parks	±10 ac
	Landscaped Drainage Areas	±15 ac
	Miscellaneous	±18 ac
Total		±117 ac

Note: Pocket Park locations and sizes are conceptual and final location and size will be determined at platting

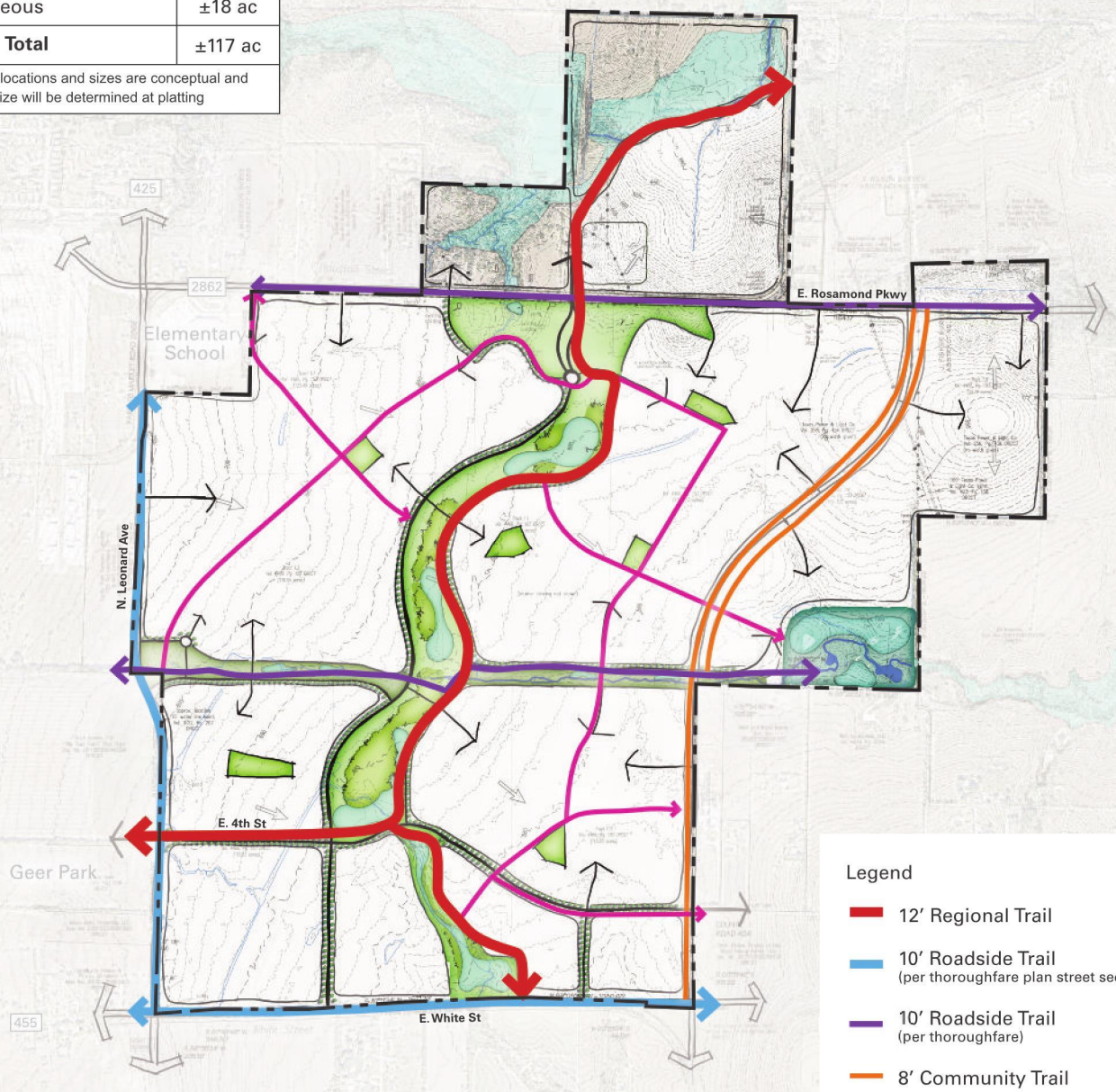

Legend

- 12′ Regional Trail
- 10′ Roadside Trail (per thoroughfare plan street sections)
- 10′ Roadside Trail (per thoroughfare)
- 8′ Community Trail
- 6′ Neighborhood Trail

Note:
Precise regional trail alignment is contingent on site conditions and land ownership

0 800′ 1600′

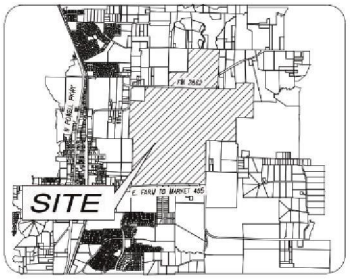

LOCATION MAP / KEY MAP
N.T.S.

The information shown is based on the best information available and is subject to change without notice.

EXHIBIT J - TRAILS AND OPEN SPACE IMPROVEMENTS

SHERLEY FARMS

CITY OF ANNA, COLLIN COUNTY, TEXAS
G. MORRISON SURVEY ~ ABSTRACT NO. 559

DECEMBER OF 2024

Exhibit K

PID Bonds Financial Summary

City of Anna, Texas

For illustration purposes only

Sherley Farms Public Improvement District

PROPOSED DEVELOPMENT PLAN

TOTAL SHERLEY FARMS IMPROVEMENT DISTRICT

Category	No. of Units	*Expected* Finished Lot Unit Value	*Expected* Build Out Unit Value	*Expected* Finished Lots Value	*Expected* Build Out Value
Townhomes (Tellus)	120	$ 62,500	$ 250,000	$ 7,500,000	$ 30,000,000
SF 40' (Tellus)	638	96,000	384,000	61,248,000	244,992,000
SF 50' (Tellus)	740	120,000	480,000	88,800,000	355,200,000
SF 60' (Tellus)	740	144,000	576,000	106,560,000	426,240,000
SF 70' (Tellus)	190	168,000	672,000	31,920,000	127,680,000
SF 1/2 ac. (Tellus)	150	264,000	1,056,000	39,600,000	158,400,000
Townhomes (Sherley Partners)	80	75,000	300,000	6,000,000	24,000,000
Cottage Homes (Sherley Partners)	55	62,500	250,000	3,437,500	13,750,000
SF (Sherley Partners)	7	250,000	1,000,000	1,750,000	7,000,000
MF (Sherley Partners)	400	12,500	200,000	5,000,000	80,000,000
Retail/COMM (Sherley Partners)	260,000	25.36	329.62	6,592,308	85,700,000
				$ 358,407,808	$ 1,552,962,000

Townhomes Unit Weighted Average	*$67,500*	*$270,000*
Single Family Unit Weighted Average	*$133,825*	*$535,299*

Notes:

Information provided by the Developers on 9/25/2024 and 10/1/2024. Subject to change.

City of Anna, Texas
Sherley Farms Public Improvement District
PROJECT DEBT CAPACITY SUMMARY

For illustration purposes only

	SINGLE-FAMILY SUBZONE PID BONDS[1]	COMMERCIAL SUBZONE PID BONDS[2]	TOTAL
SOURCES OF FUNDS			
Estimated Par Amount of Bonds	$ 235,343,000	$ 9,273,000	$ 244,616,000
Total Sources of Funds	$ 235,343,000	$ 9,273,000	$ 244,616,000
USES OF FUNDS			
Project Fund (Bond Proceeds PID Projects)	$ 193,911,752	$ 7,660,047	$ 201,571,799
Capitalized Interest Fund[3]	-	-	-
Debt Service Reserve Fund[4]	17,896,948	685,653	18,582,601
Financing Costs & Admin Fees[5]	23,534,300	927,300	24,461,600
Total Uses of Funds	$ 235,343,000	$ 9,273,000	$ 244,616,000
Expected Value-to-Lien per Parcel at Bond Issuance	1.47x [6]	1.25x [7]	1.47x
Assumed Bond Interest Rate[8]	6.10%	6.10%	6.10%
Average Annual Installment as Tax Rate Equivalent	$1.3500	$0.4777	
Less: TIRZ Adjustment as Tax Rate Equivalent[9]	($0.2536)	($0.2536)	
Net Average Annual Installment as Tax Rate Equivalent	$1.0964	$0.2241	
Term of Bonds	30 years	30 years	30 years
City TIRZ Participation Rate as % of Tax Rate	50%	50%	50%
Number of Benefited Units	2,720	400 MF Units 260,000 COMM Sq Ft	
PID Assessment per Benefited Unit	$86,523	$11,193 per MF Unit $18.45 per COMM Sq Ft	
Project Funds per Benefited Unit	$71,291	$9,246 per MF Unit $15.24 per COMM Sq Ft	
City PID Fee per SF Unit	($3,400)	$0	
Net Project Funds per Benefited Unit	$67,891	$9,246 per MF Unit $15 per MF Unit	

Notes:
(1) Single-Family Subzone includes all parcels (incl. Townhomes and Cottages) except Multi-Family and Retail/Commercial.
(2) Commercial Subzone only includes Multi-family and Retail/Commercial Parcels. Does not include townhomes and cottages.
(3) Assumes no use of capitalized interest, subject to change. Use of Cap-I reduces project funds generated thorugh bond proceeds.
(4) Assumes to be the max annual debt service payment. Not to exceed the IRS' three-prong test.
(5) For illustration and discussion purposes only; subject to change. Assumes 10% of par amount.
(6) Assumes no appraisal discounts for illustration purposes only; subject to change.
(7) Assumes no appraisal discounts for illustration purposes only; subject to change. Assumed to be a minimum of 1.25:1 ratio.
(8) For illustration purposes only; subject to change at any time.
(9) Including TIRZ admin expense.

City of Anna, Texas For illustration purposes only
Sherley Farms Public Improvement District
PROJECTED TAX STATEMENT - SINGLE-FAMILY SUBZONE

Projected **Tax Statement - Single-Family Subzone**

	2024 Tax Rate	Tax Levy on $270,000 Avg. Townhome	Tax Levy on $535,299 Avg. SF Home	Tax Levy on $250,000 Cottage Home
City of Anna	$ 0.5072	$ 1,369.44	$ 2,715.04	$ 1,268.00
Collin County	0.1493	403.23	799.43	373.36
Collin County Community College District	0.0812	219.29	434.77	203.05
Anna Independent School District	1.2580	3,396.60	6,734.06	3,145.00
Total Tax Rate	**$ 1.9958**	**$ 5,388.56**	**$ 10,683.30**	**$ 4,989.41**
GROSS Avg. Annual Installment as a Tax Rate Equivalent/Levy[1]	$ 1.3500	$ 3,644.89	$ 7,226.32	$ 3,374.90
Total GROSS Overlapping Tax Rate Equivalent/Levy plus Special Assessment	**$ 3.3457**	**$ 9,033.45**	**$ 17,909.62**	**$ 8,364.31**
Projected TIRZ Credit as Tax Rate Equivalent/Levy [2]	$ (0.2536)	$ (684.72)	$ (1,357.52)	$ (634.00)
Total Overlapping Tax Rate Equivalent/Levy *after Projected TIRZ Credit*	**$ 3.0921**	**$ 8,348.73**	**$ 16,552.11**	**$ 7,730.31**
Net Avg. Annual Installment as Tax Rate Equivalent/Levy	*$ 1.0964*	*$ 2,960.17*	*$ 5,868.81*	*$ 2,740.90*

(1) Inclusive of principal, interest, additonal interest and admin levies. Not to exceed $1.35 per Development Agreement.
(2) TIRZ credit calculation as a tax rate equivalent includes the budgeted TIRZ Admin Expense.

City of Anna, Texas For illustration purposes only

Sherley Farms Public Improvement District

PROJECTED TAX STATEMENT - COMMERCIAL SUBZONE

***Projected* Tax Statement - Commercial Subzone**

	2024 Tax Rate	Tax Levy on $200,000 MF Unit	Tax Levy on Sq. Ft. Retail/COMM
City of Anna	$ 0.5072	$ 1,014.40	$ 1.67
Collin County	0.1493	298.69	0.49
Collin County Community College District	0.0812	162.44	0.27
Anna Independent School District	1.2580	2,516.00	4.15
Total Tax Rate	**$ 1.9958**	**$ 3,991.53**	**$ 6.58**
GROSS Avg. Annual Installment as a Tax Rate Equivalent/Levy[1]	$ 0.4777	$ 955.41	$ 1.57
Total GROSS Overlapping Tax Rate Equivalent/Levy plus Special Assessment	**$ 2.4735**	**$ 4,946.93**	**$ 8.15**
Projected TIRZ Credit as Tax Rate Equivalent/Levy [2]	$ (0.2536)	$ (507.20)	$ (0.84)
Total Overlapping Tax Rate Equivalent/Levy *after Projected TIRZ Credit*	**$ 2.2199**	**$ 4,439.73**	**$ 7.32**
Net Avg. Annual Installment as Tax Rate Equivalent/Levy	*$ 0.2241*	*$ 448.21*	*$ 0.74*

(1) Inclusive of principal, interest, additonal interest and admin levies. Not to exceed $1.35 per Development Agreement.

(2) TIRZ credit calculation as a tax rate equivalent includes the budgeted TIRZ Admin Expense.

City of Anna, Texas
Sherley Farms Public Improvement District
DEBT CAPACITY - 50% CITY TIRZ - SINGLE-FAMILY SUBZONE

For illustration purposes only

Bond Year	Single-Family Subzone Special Assessment Revenue Bonds: Principal	Interest[1]	Additional Interest Levy[2]	Administrative Levy[3]	TOTAL LEVY	*Total Levy as Tax Rate Equivalent*	Bond Year	GROSS PID LEVY	TIRZ CREDIT	*TIRZ Share as Tax Rate Equivalent*	NET PID LEVY	*Net PID Levy as Tax Rate Equivalent*
1	$ 2,775,000	$ 14,355,923	$ 1,176,715	$ 420,000	**$ 18,727,638**	*$ 1.3500*	1	$ 18,727,638	$ 3,518,096	*$ 0.2536*	$ 15,209,542	*$ 1.0964*
2	2,950,000	14,186,648	1,162,840	428,400	**18,727,888**	*1.3500*	2	18,727,888	3,518,096	*0.2536*	15,209,792	*1.0964*
3	3,136,000	14,006,698	1,148,090	436,968	**18,727,756**	*1.3500*	3	18,727,756	3,518,096	*0.2536*	15,209,660	*1.0964*
4	3,334,000	13,815,402	1,132,410	445,707	**18,727,519**	*1.3500*	4	18,727,519	3,518,096	*0.2536*	15,209,423	*1.0964*
5	3,545,000	13,612,028	1,115,740	454,622	**18,727,390**	*1.3500*	5	18,727,390	3,518,096	*0.2536*	15,209,293	*1.0964*
6	3,770,000	13,395,783	1,098,015	463,714	**18,727,512**	*1.3500*	6	18,727,512	3,518,096	*0.2536*	15,209,416	*1.0964*
7	4,010,000	13,165,813	1,079,165	472,988	**18,727,966**	*1.3500*	7	18,727,966	3,518,096	*0.2536*	15,209,870	*1.0964*
8	4,265,000	12,921,203	1,059,115	482,448	**18,727,766**	*1.3500*	8	18,727,766	3,518,096	*0.2536*	15,209,670	*1.0964*
9	4,537,000	12,661,038	1,037,790	492,097	**18,727,925**	*1.3500*	9	18,727,925	3,518,096	*0.2536*	15,209,829	*1.0964*
10	4,826,000	12,384,281	1,015,105	501,939	**18,727,325**	*1.3499*	10	18,727,325	3,518,096	*0.2536*	15,209,228	*1.0963*
11	5,135,000	12,089,895	990,975	511,978	**18,727,848**	*1.3500*	11	18,727,848	3,518,096	*0.2536*	15,209,751	*1.0964*
12	5,463,000	11,776,660	965,300	522,217	**18,727,177**	*1.3499*	12	18,727,177	3,518,096	*0.2536*	15,209,081	*1.0963*
13	5,813,000	11,443,417	937,985	532,662	**18,727,064**	*1.3499*	13	18,727,064	3,518,096	*0.2536*	15,208,967	*1.0963*
14	6,186,000	11,088,824	908,920	543,315	**18,727,059**	*1.3499*	14	18,727,059	3,518,096	*0.2536*	15,208,962	*1.0963*
15	6,584,000	10,711,478	877,990	554,181	**18,727,649**	*1.3500*	15	18,727,649	3,518,096	*0.2536*	15,209,553	*1.0964*
16	7,007,000	10,309,854	845,070	565,265	**18,727,189**	*1.3499*	16	18,727,189	3,518,096	*0.2536*	15,209,092	*1.0963*
17	7,458,000	9,882,427	810,035	576,570	**18,727,032**	*1.3499*	17	18,727,032	3,518,096	*0.2536*	15,208,936	*1.0963*
18	7,939,000	9,427,489	772,745	588,101	**18,727,335**	*1.3499*	18	18,727,335	3,518,096	*0.2536*	15,209,239	*1.0963*
19	8,451,000	8,943,210	733,050	599,863	**18,727,123**	*1.3499*	19	18,727,123	3,518,096	*0.2536*	15,209,027	*1.0963*
20	8,997,000	8,427,699	690,795	611,861	**18,727,355**	*1.3500*	20	18,727,355	3,518,096	*0.2536*	15,209,258	*1.0964*
21	9,579,000	7,878,882	645,810	624,098	**18,727,790**	*1.3500*	21	18,727,790	3,518,096	*0.2536*	15,209,693	*1.0964*
22	10,198,000	7,294,563	597,915	636,580	**18,727,058**	*1.3499*	22	18,727,058	3,518,096	*0.2536*	15,208,961	*1.0963*
23	10,859,000	6,672,485	546,925	649,311	**18,727,721**	*1.3500*	23	18,727,721	3,518,096	*0.2536*	15,209,625	*1.0964*
24	11,563,000	6,010,086	492,630	662,298	**18,728,014**	*1.3500*	24	18,728,014	3,518,096	*0.2536*	15,209,917	*1.0964*
25	12,312,000	5,304,743	434,815	675,544	**18,727,102**	*1.3499*	25	18,727,102	3,518,096	*0.2536*	15,209,005	*1.0963*
26	13,111,000	4,553,711	373,255	689,055	**18,727,021**	*1.3499*	26	18,727,021	3,518,096	*0.2536*	15,208,924	*1.0963*
27	13,963,000	3,753,940	307,700	702,836	**18,727,476**	*1.3500*	27	18,727,476	3,518,096	*0.2536*	15,209,379	*1.0964*
28	14,871,000	2,902,197	237,885	716,892	**18,727,974**	*1.3500*	28	18,727,974	3,518,096	*0.2536*	15,209,878	*1.0964*
29	15,838,000	1,995,066	163,530	731,230	**18,727,826**	*1.3500*	29	18,727,826	3,518,096	*0.2536*	15,209,730	*1.0964*
30	16,868,000	1,028,948	84,340	745,855	**18,727,143**	*1.3499*	30	18,727,143	3,518,096	*0.2536*	15,209,046	*1.0963*
	$ 235,343,000	$ 286,000,391	$ 23,442,655	$ 17,038,593	**$ 561,824,639**			$ 561,824,639	$ 105,542,893		$ 456,281,746	

(1) Assumes an interest rate of 6.10% for discussion purposes only, subject to change.
(2) Calculated at 0.5% of outstanding bonds.
(3) For illustration purposes only, subject to change after input from PID/TIRZ Administrator. Assumes PID and TIRZ administrative expenses for seven PID improvement areas.

City of Anna, Texas

Sherley Farms Public Improvement District

DEBT CAPACITY - 50% CITY TIRZ - COMMERCIAL SUBZONE

For illustration purposes only

Bond Year	Commercial Subzone Special Assessment Revenue Bonds Principal	Interest[1]	Additional Interest Levy[2]	Administrative Levy[3]	**TOTAL LEVY**	*Total Levy as Tax Rate Equivalent*	Bond Year	GROSS PID LEVY	TIRZ CREDIT	*TIRZ Share as Tax Rate Equivalent*	NET PID LEVY	*Net PID Levy as Tax Rate Equivalent*
1	$ 120,000	$ 565,653	$ 46,365	$ 60,000	**$ 792,018**	*$ 0.4780*	1	$ 792,018	$ 420,215	*$ 0.2536*	$ 371,803	*$ 0.2244*
2	126,000	558,333	45,765	61,200	**791,298**	*0.4775*	2	791,298	420,215	*0.2536*	371,083	*0.2239*
3	133,000	550,647	45,135	62,424	**791,206**	*0.4775*	3	791,206	420,215	*0.2536*	370,991	*0.2239*
4	141,000	542,534	44,470	63,672	**791,676**	*0.4778*	4	791,676	420,215	*0.2536*	371,461	*0.2242*
5	149,000	533,933	43,765	64,946	**791,644**	*0.4778*	5	791,644	420,215	*0.2536*	371,429	*0.2242*
6	157,000	524,844	43,020	66,245	**791,109**	*0.4774*	6	791,109	420,215	*0.2536*	370,894	*0.2238*
7	167,000	515,267	42,235	67,570	**792,072**	*0.4780*	7	792,072	420,215	*0.2536*	371,857	*0.2244*
8	176,000	505,080	41,400	68,921	**791,401**	*0.4776*	8	791,401	420,215	*0.2536*	371,186	*0.2240*
9	186,000	494,344	40,520	70,300	**791,164**	*0.4775*	9	791,164	420,215	*0.2536*	370,948	*0.2239*
10	197,000	482,998	39,590	71,706	**791,294**	*0.4775*	10	791,294	420,215	*0.2536*	371,078	*0.2239*
11	209,000	470,981	38,605	73,140	**791,726**	*0.4778*	11	791,726	420,215	*0.2536*	371,510	*0.2242*
12	221,000	458,232	37,560	74,602	**791,394**	*0.4776*	12	791,394	420,215	*0.2536*	371,179	*0.2240*
13	234,000	444,751	36,455	76,095	**791,301**	*0.4776*	13	791,301	420,215	*0.2536*	371,085	*0.2240*
14	248,000	430,477	35,285	77,616	**791,378**	*0.4776*	14	791,378	420,215	*0.2536*	371,163	*0.2240*
15	263,000	415,349	34,045	79,169	**791,563**	*0.4777*	15	791,563	420,215	*0.2536*	371,348	*0.2241*
16	279,000	399,306	32,730	80,752	**791,788**	*0.4778*	16	791,788	420,215	*0.2536*	371,573	*0.2242*
17	296,000	382,287	31,335	82,367	**791,989**	*0.4780*	17	791,989	420,215	*0.2536*	371,774	*0.2244*
18	313,000	364,231	29,855	84,014	**791,100**	*0.4774*	18	791,100	420,215	*0.2536*	370,885	*0.2238*
19	332,000	345,138	28,290	85,695	**791,123**	*0.4774*	19	791,123	420,215	*0.2536*	370,908	*0.2238*
20	353,000	324,886	26,630	87,409	**791,925**	*0.4779*	20	791,925	420,215	*0.2536*	371,709	*0.2243*
21	374,000	303,353	24,865	89,157	**791,375**	*0.4776*	21	791,375	420,215	*0.2536*	371,160	*0.2240*
22	397,000	280,539	22,995	90,940	**791,474**	*0.4777*	22	791,474	420,215	*0.2536*	371,259	*0.2241*
23	422,000	256,322	21,010	92,759	**792,091**	*0.4780*	23	792,091	420,215	*0.2536*	371,876	*0.2244*
24	447,000	230,580	18,900	94,614	**791,094**	*0.4774*	24	791,094	420,215	*0.2536*	370,879	*0.2238*
25	475,000	203,313	16,665	96,506	**791,484**	*0.4777*	25	791,484	420,215	*0.2536*	371,269	*0.2241*
26	505,000	174,338	14,290	98,436	**792,064**	*0.4780*	26	792,064	420,215	*0.2536*	371,849	*0.2244*
27	536,000	143,533	11,765	100,405	**791,703**	*0.4778*	27	791,703	420,215	*0.2536*	371,488	*0.2242*
28	569,000	110,837	9,085	102,413	**791,335**	*0.4776*	28	791,335	420,215	*0.2536*	371,120	*0.2240*
29	605,000	76,128	6,240	104,461	**791,829**	*0.4779*	29	791,829	420,215	*0.2536*	371,614	*0.2243*
30	643,000	39,223	3,215	106,551	**791,989**	*0.4780*	30	791,989	420,215	*0.2536*	371,773	*0.2244*
	$ 9,273,000	$ 11,127,437	$ 912,085	$ 2,434,085	**$ 23,746,607**			$ 23,746,607	$ 12,606,456		$ 11,140,151	

(1) Assumes an interest rate of 6.10% for discussion purposes only, subject to change.

(2) Calculated at 0.5% of outstanding bonds.

(3) For illustration purposes only, subject to change after input from PID/TIRZ Administrator. Assumes PID and TIRZ administrative expenses for one PID improvement area.

City of Anna, Texas

For illustration purposes only

Sherley Farms Public Improvement District

PROJECT IMPACT ON THE CITY (AD VALOREM PROPERTY TAXES) - 50% TIRZ Scenario

	No. of Units	Average Build Out Unit Value	Average Build Out Total Value	*At 2024 Rate* Gross City Taxes Generated per Unit	*50%* City Taxes Deposited in TIRZ Fund per Unit	Net City Taxes Generated per Unit	*At 2024 Rate* Gross City Taxes Generated at Build Out	*50%* City Taxes Deposited in TIRZ Fund at Build Out	Net City Taxes Generated at Build Out
Proposed Single Family, Townhomes & Cottages	2,720	$510,023	$1,387,262,000	$2,587	($1,293)	$1,293	$7,036,193	($3,518,096)	$3,518,096
Proposed Multi Family	400	$200,000	$80,000,000	$1,014	($507)	$507	$405,760	($202,880)	$202,880
Proposed Retail & Commercial	260,000	$329.62	$85,700,000	$1.67	($0.84)	$0.84	$434,670	($217,335)	$217,335
Total			$1,552,962,000				$7,876,623	($3,938,312)	$3,938,312

	No. of Units	Average Build Out Unit Value	Average Build Out Total Value	*Proposed Non TIRZ* Average PID Assessment Annual Installment per Unit	City Taxes used for PID Bonds Debt Service per Unit	Total Funds for Debt Service and PID/TIRZ Admin per Unit	*Proposed Non TIRZ* Average PID Assessment Annual Installment at Build Out	City Taxes used for PID Bonds Debt Service at Build Out	Total Funds for Debt Service and PID Admin at Build Out
Proposed Single Family, Townhomes & Cottages	2,720	$510,023	$1,387,262,000	$5,592	$1,293	$6,885	$15,209,392	$3,518,096	$18,727,488
Proposed Multi Family	400	$200,000	$80,000,000	$448	$507	$955	$179,282	$202,880	$382,162
Proposed Retail & Commercial	260,000	$330	$85,700,000	$0.74	$0.84	$1.57	$192,056	$217,335	$409,391
Total			$1,552,962,000				$15,580,730	$3,938,312	$19,519,042

SHERLEY FARMS DEVELOPMENT AGREEMENT

This Sherley Farms Development Agreement (this "Agreement") is entered into by and between the CITY OF ANNA, TEXAS, a Texas home-rule municipality (the "City"), TELLUS TEXAS III, LLC, a Texas limited liability company and its successors and assigns ("Tellus"), and SHERLEY PARTNERS, LTD., a Texas limited partnership and its successors and assigns ("Owner" and together with Tellus, the "Developers") (each individually, a "Party," and collectively, the "Parties"), to be effective on the Effective Date.

SECTION 1
RECITALS

WHEREAS, certain capitalized terms used in these recitals are defined in Section 2; and

WHEREAS, the City is a home-rule municipality of the State of Texas; and

WHEREAS, Owner owns, and Tellus is under contract to purchase a portion of, the approximately 1,123 acres of real property, described by metes and bounds in **Exhibit A** (the "Property"); and

WHEREAS, the Property is located within the extraterritorial jurisdiction (the "ETJ") of the City; and

WHEREAS, it is intended that the Property, which is depicted in **Exhibit B**, be developed to contain single-family homes of various sizes, townhomes, multi-family, commercial and other mixed-use development constructed over multiple phases and is to be known and referred to as "Sherley Farms" (the "Project"), as generally depicted on the Illustrative Layout (as defined herein), which is attached hereto as **Exhibit C**, which may be revised as set forth in this Agreement, and in accordance with applicable City Regulations and the development standards set forth in certain proposed planned development standards ("Development Standards"), which Development Standards are attached hereto as **Exhibit D**; and

WHEREAS, the Illustrative Layout is intended to comply with the vision of the 2050 Comprehensive Plan; and

WHEREAS, the Owner and Tellus (to the extent Tellus has taken ownership of any portion of the Property) intend to file a voluntary petition for annexation of the Property; and

WHEREAS, the Parties intend for the City to provide water and sewer service to the Property; and

WHEREAS, the Developers desire and intend to design, construct and install and/or make financial contributions to certain Authorized Improvements to serve the Project; and

WHEREAS, in consideration of the Developers' agreements contained herein, the City shall use reasonable efforts to exercise its powers under Texas Local Government Code, Chapter 372 (the "PID Act") to create a PID (as defined herein) encompassing the Property to provide financing arrangements that will enable Developers to do the following in accordance with the

procedures and requirements of the PID Act and this Agreement: (a) fund or be reimbursed for a specified portion of the costs of the PID Projects using the proceeds of PID Bonds; or (b) obtain reimbursement for the specified portion of the costs of the PID Projects, the source of which reimbursement will be installment payments from Assessments within the PID, provided that such reimbursements shall be subordinate to the payment of PID Bonds and Administrative Expenses; and

WHEREAS, in consideration of the Developers' agreements contained herein, as allowed by law, the City agrees to exercise its powers under the TIRZ Act to create the TIRZ and to dedicate fifty percent (50%) of the City's ad valorem tax increment, less collection and administrative costs, attributable to the TIRZ, based on the City's tax rate each year and as authorized by law, for a period of up to forty (40) years: (a) for property located in a Single-Family Subzone (as defined herein) to offset or pay a portion of any Assessment levied on assessed parcels within the PID for the costs of Authorized Improvements that qualify as TIRZ Projects under the TIRZ Act and (b) for property located in a Commercial Subzone, to the extent such property is not subject to Assessments or all ad valorem tax increment generated on a particular parcel in the Commercial Subzone is not needed to offset Assessments, to fund a Chapter 380 Grant as described herein; and

WHEREAS, after creation of the PID and the TIRZ, all of the City's administrative costs associated with the PID will be funded by the levy of Assessments on the Property in accordance with the PID Act, and all of the City's administrative costs associated with the TIRZ will be funded from the TIRZ Revenue in accordance with the TIRZ Act; and

WHEREAS, the City desires to provide certain economic incentives related to the commercial development on the portions of the Property designated for commercial development;

WHEREAS, the Parties desire and intend for the design, funding, construction, and installation of the Public Infrastructure to occur in a phased manner over the Term of this Agreement and that Developers will dedicate to and the City will accept the Public Infrastructure for public use and maintenance, subject to the City's approval of the plans and inspection of the Public Infrastructure in accordance with this Agreement and the City Regulations; and

WHEREAS, the City, subject to the consent and approval of the City Council, and in accordance with the terms of this Agreement and all legal requirements, including but not limited to the Indenture, intends to: (i) adopt a Service and Assessment Plan; (ii) adopt an Assessment Ordinance (to pay for a specified portion of the PID Projects and approved by the City Engineer or his designee and the costs associated with the administration of the PID and the issuance of the PID Bonds for each respective Phase of the Project); and (iii) issue, in multiple series, estimated to be $300,000,000 in the principal amount of PID Bonds for the purpose of financing a specified portion of the costs of the PID Projects and paying associated costs as described herein; and

WHEREAS, unless expressly set forth to the contrary in this Agreement, it is the Parties' mutual intent that this Agreement shall supersede City Regulations only to the extent that City Regulations directly conflict with the terms of this Agreement; and

WHEREAS, the Developers understand and acknowledge that the obligations undertaken under this Agreement are primarily for the benefit of the Property; and

WHEREAS, the Developers understand and acknowledge that acceptance of this Agreement is not an exaction or a concession demanded by the City but rather is an undertaking of Developers' voluntary design to ensure consistency, quality, and adequate infrastructure that will benefit development of the Property; and

WHEREAS, following annexation of the Property, the City intends to consider zoning any portion of the Property in the corporate limits as a planned development district and the Parties acknowledge that the Property may be developed and used in accordance with this Agreement; and

WHEREAS, the City recognizes the positive impact the Public Infrastructure will bring to the City and that said improvements will promote state and local economic development, stimulate business and commercial activity in the City for the development and diversification of the economy of the state, promote the development and expansion of commerce in the state, and reduce unemployment or underemployment in the state; and

WHEREAS, as the Property is in the City's ETJ on the Effective Date of this Agreement, the Parties intend that this Agreement is a development agreement as provided for by state law in Section 212.171 *et seq* of the Texas Local Government Code; and

WHEREAS, this Agreement shall constitute a "permit" under Chapter 245 of the Texas Local Government Code and as allowed pursuant to Section 212.172(g) of the Texas Local Government Code and that all prerequisites for entering into such agreement have been completed in full and that the City has provided the Developers with the written disclosures required when offering this Agreement under Section 212.171(b-1), said section being incorporated herein as if set forth in full;

NOW, THEREFORE, in consideration of the mutual covenants contained herein, the Parties hereby agree as follows:

SECTION 2
DEFINITIONS

Certain terms used in this Agreement are defined in this Section 2. Other terms used in this Agreement are defined in the recitals or in other sections of this Agreement. Unless the context requires otherwise, the following terms shall have the meanings hereinafter set forth:

2050 Comprehensive Plan means the Anna 2050 Comprehensive Plan and applicable provisions of the Anna 2050 Parks Master Plan adopted by the City Council on April 27, 2021 under Ordinance No. 903-2021 and as amended as of the Effective Date.

Administrative Expenses means reasonable expenses incurred by the City in the establishment, administration, and operation of the PID and the TIRZ.

Administrator means an employee, consultant, or designee of the City who shall have the responsibilities provided in the Service and Assessment Plan, an Indenture, or any other agreement or document approved by the City related to the duties and responsibilities for the administration of the PID.

Assessment(s) means the special assessments levied on the Property pursuant to the PID Act on a Phase-by-Phase basis, under one or more Assessment Ordinances adopted on a Phase-by-Phase basis to reimburse the Developers on a Phase-by-Phase basis for a portion of the PID Projects benefitting the applicable Phase(s) as set forth in the Service and Assessment Plan, as well as payment of Administrative Expenses and repayment of the PID Bonds and the costs associated with the issuance of the PID Bonds.

Assessment Ordinance means an ordinance approved by the City Council under the PID Act levying one or more Assessment(s).

Authorized Improvements means the PID Projects and all on- and off-site public water, sewer, drainage, and roadway facilities, rights-of-way, along with other public improvements, such as parks, trails, landscaping and screening, that benefit the Property, are to be constructed by Developers, are identified on **Exhibit E**, and for which the Parties intend Developers will be fully or partially reimbursed pursuant to the terms of this Agreement.

Bond Ordinance means each ordinance adopted by the City Council that authorizes and approves the issuance and sale of any PID Bonds for the applicable Phase(s) of the Project.

Budgeted Cost means, with respect to any given Authorized Improvement, the estimated cost of the improvement as set forth by Phase in **Exhibit E**.

Capital Improvement(s) shall have the meaning provided in Chapter 395, Texas Local Government Code.

Capital Improvement Costs means any construction, contributions, or dedications of Capital Improvements, including actual costs of design, engineering, construction, acquisition, and inspection, and all costs related in any manner to the Capital Improvement.

Capital Improvements Plan or "CIP" means all capital improvements plan(s) duly adopted by the City under Chapter 395, Texas Local Government Code, as may be updated or amended from time to time.

Chapter 245 means Chapter 245, Texas Local Government Code, as amended.

Chapter 380 Agreement means an agreement, other than the Impact Fee 380 Agreement, in which the City agrees to provide a Chapter 380 Grant pursuant to Chapter 380, Texas Local Government Code, as amended.

Chapter 380 Grant means any grant provided by the City pursuant to a Chapter 380 Agreement as described in this Agreement.

Chapter 395 means Chapter 395, Texas Local Government Code, as amended.

City means the City of Anna, a home rule municipality located in Collin County, Texas.

City Code means the Anna City Code of Ordinances and all of its provisions and regulations or standards adopted by reference in said Code in effect on the Effective Date;

provided, however, that as it relates to Public Infrastructure for any given Phase, the applicable construction standards (including, without limitation, uniform building codes) shall be those that the City has duly adopted at the time of the filing of an application for a preliminary plat for that Phase unless construction has not commenced within two years of approval of such preliminary plat in which case the construction standards shall be those that the City has duly adopted at the time that construction commences, except that to the extent there is a conflict between the City Code and the Development Standards, the Development Standards shall control.

City Council means the City Council of the City.

City Engineer means the person or entity acting as the City Engineer.

City Manager means the current or acting City Manager of the City of Anna or a person designated to act on behalf of the City Manager if the designation is in writing and signed by the current or acting City Manager.

City PID Fee means the per single-family-residential-lot fee to be paid to the City in accordance with the established City PID Policy as of the Effective Date and in accordance with Section 5.21 hereof.

City PID Policy means the City of Anna Public Improvement District Policy approved by the City Council on June 23, 2020 via Resolution No. 2020-06-747.

City Regulations mean City Code provisions, ordinances, design standards (including but not limited to the City design standards and the Development Standards), uniform codes, policies, requirements, limitations, restrictions, and other regulations (including but not limited to all fees and land dedications applicable to the Project) duly adopted by the City and in effect on the Effective Date; provided, however, that as it relates to Public Infrastructure for any given phase, the applicable construction standards (including, without limitation, uniform building codes) shall be those that the City has duly adopted at the time of the filing of an application for a preliminary plat for that phase unless construction has not commenced within two years of approval of such preliminary plat in which case the construction standards shall be those that the City has duly adopted at the time that construction commences, except that to the extent there is a conflict between the City Regulations and the PD, the PD shall control. The term does not include Park Fees, which shall be waived on the Property in accordance with this Agreement.

Concept Plan means the intended conceptual plan for each Phase of the Project as may be approved by the City in accordance with Section 5.7 in which case it shall fully supersede and replace the Illustrative Layout.

Cost Underruns means actual PID Projects Costs that are less than the Budgeted Costs set forth in the SAP.

Developer means, when used in the singular, the entity developing and constructing Authorized Improvements on a particular Phase or portion of the Property, such entity being Tellus or the Owner as the context requires.

Developer Continuing Disclosure Agreement means any continuing disclosure agreement

of either of the Developers executed contemporaneously with the issuance and sale of PID Bonds.

Developer Improvement Account means each construction fund account created under an Indenture, if any, funded by either of the Developers, and used to pay for portions of the acquisition, design, and construction of the PID Projects for a particular Phase of the Project attributable to a Developer, the need for which account shall be determined on a Phase-by-Phase basis.

Development Standards mean the design specifications and construction standards identified in Section 5.13 of this Agreement, including without limitation the standards set forth in **Exhibit D** and applicable City Regulations.

Effective Date means the effective date of this Agreement, which shall be the date upon which all Parties have fully executed and delivered this Agreement and the City's legal counsel has signed this Agreement, approving same as to form; provided that, notwithstanding anything contained herein, no obligation of Tellus to construct Authorized Improvements on any portion of the Property that solely benefit such portion of the Property or obtain any easements or rights-of-way therefor shall take effect until Tellus has taken ownership of such portion of the Property.

End User means any tenant, user, or owner of a Fully Developed and Improved Lot, but excluding the HOA or POA.

Equivalent Dwelling Unit (EDU) means the water and/or sewer capacity equal to one single family residential unit.

ETJ shall have the meaning given to it in the Recitals.

Fully Developed and Improved Lot means any privately-owned lot in the Project, regardless of proposed use, intended to be served by the Authorized Improvements and for which a final plat has been approved by the City and recorded in the Real Property Records of Collin County, Texas.

HOA means one or more homeowners associations formed with respect to and single-family residential portion of the Project, which shall privately function as a homeowners association for the Project.

Home Buyer Disclosure Program means the disclosure provisions relating to property located in public improvement districts set forth in Chapter 5 of the Texas Property Code, which establish a mechanism to disclose to each buyer the terms and conditions under which their lot is burdened by Assessments.

Illustrative Layout means the intended plan for the development of the Project as depicted on **Exhibit C**.

Impact Fees means those fees assessed and charged against the Project in accordance with Chapter 395 and as defined therein.

Improvement Account of the Project Fund means the construction fund account created

under a particular Indenture, funded by the PID Bond Proceeds, and used to pay or reimburse for certain portions of the construction or acquisition of the PID Projects.

Indenture means a trust indenture by and between the City and a trustee bank under which PID Bonds are issued and funds are held and disbursed with respect to the particular Phase for which such PID Bonds are issued.

Independent Appraisal means, in establishing the appraised value, (i) the appraised value of a specific assessed parcel or assessed parcels, as applicable, in a specific Phase for which Assessments have been levied as established by publicly available data from the Collin Central Appraisal District, (ii) the Collin Central Appraisal District Chief Appraiser's estimated assessed valuation for completed homes (home and lot assessed valuation) and estimated lot valuation for lots on which homes are under construction, (iii) an "as-complete" appraisal delivered by an independent appraiser licensed in the State of Texas, which appraisal shall assume completion of the particular Phase for which said Assessments have been or will be levied, as applicable, or (iv) a certificate delivered to the City by a qualified independent third party (which party may be the Administrator or a licensed appraiser) certifying on an individual lot type basis, the value of each lot in the particular Phase, as applicable, for which such Assessments have been levied based on either (x) the average gross sales price (which is the gross amount including escalations and reimbursements due to the seller of the lots) for each lot type based on closings of lots in such Phase for which the Assessments have been levied or (y) the sales price in the actual lot purchase contracts in the particular Phase for which such Assessments have been or will be levied, as applicable.

Institutional Investor shall mean an entity or individual that intends or desires to purchase more than five (5) detached single-family lots within the Project to construct or cause to be constructed homes owned by such entity or individual thereon to be owned for rental or leasing purposes.

Notice means any notice required or contemplated by this Agreement (or otherwise given in connection with this Agreement).

Park Fees means those fees assessed and charged against the Project in accordance with Sections 9.02.135 and A3.006 of the City Code and shall include any "park development fees" as described in City Code.

Phase means any distinct phase of development on the Property which is to be developed concurrently as finished lots.

Phase 1 means the initial phase of development on the Property which is to be developed concurrently as finished lots.

Phase 2 means the first subsequent phase of development on the Property which is to be developed concurrently as finished lots after Phase 1.

PID means one or more public improvement districts encompassing all or a portion of the Property, for which the City agrees to exert reasonable efforts to create for the benefit of certain portions of the Project pursuant to the PID Act and this Agreement.

PID Act means Chapter 372, Texas Local Government Code, as amended.

PID Bond(s) means assessment revenue bonds, but not Refunding Bonds, issued by the City pursuant to the PID Act to finance the PID Projects.

PID Bond Proceeds means the funds generated from the sale of the PID Bonds.

PID Documents means, but not limited to, collectively, the PID Resolution, the SAP, and the Assessment Ordinance(s).

PID Financial Summary means the document attached to this Agreement as **Exhibit K**, which summarizes financial data related to the PID.

PID Projects means all water, wastewater/sewer, drainage, roadway, park, trail, landscape, irrigation, hardscape, and other improvements allowable under the PID Act and benefitting and necessary to serve the Project and which shall be owned by the City or dedicated to the City by easement and maintained by the City (unless the City requires another entity to maintain projects such as trails, parks or landscaping as provided in Section 5.6 herein), including those identified in the PID Documents and outlined in **Exhibit E**.

PID Projects Cost means the actual cost of design, engineering, construction, acquisition, and/or inspection of the PID Projects, along with Administrative Expenses associated with the PID.

PID Resolution means the resolution adopted by the Council creating the PID as recorded in the real property records of Collin County, Texas.

POA means one or more property owners associations that may be formed with respect to the commercial and multifamily portions of the Project.

Project and Finance Plan means a final TIRZ Project and Finance Plan approved and adopted by the City in accordance with this Agreement as such plan may be amended from time to time.

Public Infrastructure means all water, wastewater/sewer, detention and drainage, roadway, park and trail, and other infrastructure necessary to serve the full development of the Project and/or to be constructed by Developers and dedicated to the City under this Agreement. The term includes the PID Projects.

Real Property Records means the official land recordings of the Collin County Clerk's Office.

Refunding Bonds means bonds issued pursuant to Section 372.027 of the PID Act.

Reimbursement Agreement means an agreement by and between the City and the applicable Developer by which the Parties establish the terms by which the applicable Developer may obtain reimbursements for PID Projects through the PID Bond Proceeds or Assessments for the respective Phase.

School Site means a tract of land of up to ten (10) acres (or such size as agreed to by Tellus and Anna ISD at the time of dedication) that Tellus shall convey or dedicate to the Anna ISD (as defined herein) for use as a school.

Service and Assessment Plan ("SAP") means the service and assessment plan for the PID, to be adopted and updated at least annually by the City Council pursuant to the PID Act for the purpose of assessing allocated costs against portions of the Project located within the boundaries of the PID having terms, provisions, and findings approved by the City, as required by the PID Act and this Agreement.

TIRZ means a tax increment reinvestment zone encompassing any portion of the Property to be created by the City pursuant to the TIRZ Act.

TIRZ Act means Chapter 311 of the Texas Tax Code, as amended.

TIRZ Documents means collectively the TIRZ Project and Finance Plan, the TIRZ ordinance, and the TIRZ participation agreement(s) with other taxing entities, if applicable.

TIRZ Fund(s) means the fund(s) set up by the City in order to receive TIRZ funds in accordance with this Agreement, the TIRZ Documents and state law.

TIRZ Revenue means the tax increment received by the City from the City property taxes levied against the Property and to be deposited into the TIRZ Fund(s) in accordance with the TIRZ Act.

SECTION 3
PUBLIC IMPROVEMENT DISTRICT

3.1 Creation of the PID; Levy of Assessments. The City shall use reasonable efforts to initiate and approve all necessary documents, resolutions and ordinances, including without limitation the PID Documents, required to effectuate this Agreement, to create the PID encompassing the Property, and to levy the Assessments. For each Phase of development, the City will prepare and approve a preliminary Service and Assessment Plan (or amended Service and Assessment Plan) providing for the levy of the Assessments such Phase of the PID. Promptly following preparation and approval of a preliminary SAP acceptable to the applicable Developer for the portion of the Property being assessed and subject to the City Council making findings that the PID Projects confer a special benefit on the Property, the City Council shall consider an Assessment Ordinance for the applicable Phase within the PID. Developers shall develop the Property consistent with the terms of this Agreement. Nothing contained in this Agreement, however, shall be construed as creating a contractual obligation that controls, waives, or supplants the City Council's legislative discretion or functions.

3.2 Acceptance of Assessments and Recordation of Covenants Running with the Land. Prior to the levy of the Assessment applicable to a particular Phase of the Project, the applicable Developer shall: (a) approve and accept in writing the levy of the Assessment(s) on all land owned by the applicable Developer and (b) cause covenants running with the land to be recorded against the portion of the Property within the applicable Phase that will bind any and all current and

successor developers and owners of all or any part of such Phase of the Project to pay the Assessments, with applicable interest and penalties thereon, as and when due and payable hereunder and that the purchasers of such land take their title subject to and expressly assume the terms and provisions of such assessments and the liens created thereby. Assessments may not be levied on any land owned by a Developer without the express prior written consent of that Developer required by this section. The covenants required to be recorded under this paragraph shall be recorded substantially contemporaneously with the recordation of the final plat of the applicable Phase, except for the final SAP which will be recorded by the City upon its approval in accordance with the PID Act. The Developers hereby acknowledge and accept the Home Buyer Disclosure Program.

SECTION 4
AUTHORIZED IMPROVEMENTS, PID PROJECTS, AND PUBLIC INFRASTRUCTURE

4.1 PID Projects. Prior to the issuance of PID Bonds, the PID Projects and PID Projects Costs are subject to change as may be agreed upon by the Developers and the City and, if changed, shall be updated by Developers and the City consistent with the Service and Assessment Plan and the PID Act. All approved final plats within the Property shall include those PID Projects located therein and the respective PID Projects Costs shall be finalized before the applicable final plat is approved by the City Council. Without limiting the foregoing, and on a Phase-by-Phase basis, as applicable, PID Projects Costs, the timetable for installation of the PID Projects, and all other pertinent information and data will be reviewed at least annually by the Parties in an annual update of the Service and Assessment Plan adopted and approved by the City Council consistent with the requirements of Section 372.013(b) of the PID Act.

4.2 Construction, Ownership, and Transfer of Authorized Improvements and Public Infrastructure.

(a) Construction Standards and Inspection. Except as otherwise expressly set forth in this Agreement, the Authorized Improvements and all other Public Infrastructure required for the development of the Property shall be constructed and inspected in accordance with this Agreement, the City Regulations, and any other governing body or entity with jurisdiction over the Public Infrastructure. The Developers agree to cause all Public Infrastructure to be constructed in a good and workmanlike manner. Upon request, the City shall provide "tax-exempt" letters to Developers for use by all contractors, subcontractors, and suppliers installing Public Infrastructure within the Property.

(b) Contract Letting. The Parties understand that construction of the Authorized Improvements to be funded through Assessments are legally exempt from competitive bidding requirements pursuant to the Texas Local Government Code. The Parties acknowledge that, as of the Effective Date, the construction contracts for the construction of Authorized Improvements have not been awarded and contract prices have not yet been determined. Before entering into any construction contract for the construction of all or any part of the Public Infrastructure, the applicable Developer's engineer shall prepare, or cause the preparation of, and submit to the City all contract specifications and necessary related documents, including the contract proposal showing the negotiated total contract price and scope of work.

(c) Ownership. All of the Authorized Improvements and Public Infrastructure shall be owned by the City upon acceptance of them by the City. Subject to Section 5.20, the Developers agree to take any action reasonably required by the City to transfer or otherwise dedicate or ensure the dedication of easements or property for the Authorized Improvements and Public Infrastructure to the City and the public.

(d) Operation and Maintenance. Upon inspection, approval, and acceptance of the Authorized Improvements, the City shall maintain and operate the accepted Authorized Improvements (except to the extent the City requires another entity to maintain improvements in accordance with Section 5.6).

(e) Applicability. Subsections (a)-(b), above, shall not apply to Public Infrastructure that the City is obligated to fund and construct under this Agreement, if any.

4.3 Public Infrastructure, Generally. Except as otherwise expressly provided for in this Agreement, each Developer shall provide all Public Infrastructure necessary to serve the portion of the Project owned and being developed by such Developer, including without limitation streets, utilities, drainage, sidewalks, parks, trails, street lighting, street signage, and all other required improvements, at no cost to the City except as provided herein, and in accordance with City Regulations, and as approved by the City Engineer or his/her designee. The applicable Developer shall cause the installation of such improvements within all applicable time frames in accordance with the City Regulations unless otherwise approved herein. The applicable Developer shall provide engineering studies, plan/profile sheets, and other construction documents at the time of final platting as required by City Regulations. Such plans shall be approved by the City Engineer or his/her designee prior to approval of a final plat. Construction of any portion of the Public Infrastructure shall not be initiated until a pre-construction conference that includes a City representative has been held regarding the proposed construction and City has issued a written notice to proceed which includes such Public Infrastructure.

4.4 Maintenance Bonds. The applicable Developer shall execute or cause to be executed a valid maintenance bond in accordance with applicable City Regulations that guarantees the costs of any repairs which may become necessary to any part of the construction work performed in connection with the Public Infrastructure constructed by such Developer, arising from defective workmanship or materials used therein, for a full period of not more than two (2) years from the date of final acceptance of the Public Infrastructure constructed under any such contract(s).

4.5 Inspections, Acceptance of Public Infrastructure, and Developers' Remedy. The City shall inspect, as required by City Regulations, the construction of all Public Infrastructure necessary to support the proposed development within the Property, including without limitation water, sanitary sewer, drainage, streets, park facilities, electrical, and streetlights and signs. The City's inspections shall not release Developers from their responsibility to construct, or ensure the construction of adequate Authorized Improvements and Public Infrastructure with respect to their owned portions of the Property in accordance with approved engineering plans, construction plans, and other approved plans related to development of the Property. From and after the inspection and acceptance by the City of the Public Infrastructure and any other dedications required under this Agreement, such improvements and dedications shall be owned by the City. The Developers'

sole remedy for nonperformance of this Agreement by the City shall be to seek specific performance and cost reimbursements pursuant to the terms of this Agreement.

4.6 Insurance. The applicable Developer or its contractor(s) shall acquire and maintain, during the period of time when any of the Public Infrastructure with respect to the applicable Developer's owned property is under construction (and until the full and final completion of such Public Infrastructure and acceptance thereof by the City): (a) workers compensation insurance in the amount required by law; and (b) commercial general liability insurance including personal injury liability, premises operations liability, and contractual liability, covering, but not limited to, the liability assumed under any indemnification provisions of this Agreement, with limits of liability for bodily injury, death and property damage of not less than $1,000,000.00. Such insurance shall also cover any and all claims which might arise out of the Public Infrastructure construction contracts, whether by the applicable Developer, a contractor, subcontractor, material man, or otherwise. Coverage must be on a "per occurrence" basis. All such insurance shall be issued by a carrier which is rated "A-1" or better by A.M. Best's Key Rating Guide and licensed to do business in the State of Texas. Upon the execution of Public Infrastructure construction contracts, the applicable Developer shall provide to the City certificates of insurance evidencing such insurance coverage together with the declaration of such policies. Each such policy shall provide that, at least thirty (30) days prior to the cancellation, non-renewal or modification of the same, the City shall receive written notice of such cancellation, non-renewal or modification.

SECTION 5
ADDITIONAL OBLIGATIONS AND AGREEMENTS

5.1 Wastewater/Sanitary Sewer Facilities.

(a) Tellus Obligations. Tellus is responsible for the design, installation, and construction of the wastewater/sanitary sewer improvements necessary to serve the Property as generally depicted on **Exhibit F-1** (the "Major Sewer Improvements"), provided that Tellus and the City Engineer may mutually agree to modifications to the sizing and location of such improvements at the time of construction thereof. The design of all Major Sewer Improvements shall be approved by the City in advance of the construction of same and shall be constructed in accordance with the Exhibit F-3 (the "Sewer Improvements Schedule"). Subject to the City's obligations under Section 5.20 and Section 5.1(c), Tellus shall be responsible for the acquisition of any easements and other property acquisitions necessary for Major Sewer Improvements, the size and extent of each such easement or other property interest to be approved by the City. The maximum width of the required easement shall not exceed 2.5 times the depth of the sewer line for linear improvements. The locations of said easements or other property interests shall be approved by the City Engineer or his/her designee as part of the platting process. The City will reimburse Tellus for the costs of the Major Sewer Improvements, and costs of obtaining any necessary offsite easements for the Major Sewer Improvements, through the Eligible Infrastructure Grant as set forth in Section 7.3.

(b) Timing of Developers' Obligations. Except as otherwise provided herein, the applicable Developer shall complete in a good and workmanlike manner all on-site wastewater/sanitary sewer improvements necessary to serve each Phase of the Project owned by such Developer prior to the recordation of the final plat covering such Phase; provided that the

applicable Developer may submit the final plat for any Phase prior to the installation of such improvements if it obtains approval for and executes an improvement agreement and provides adequate security therefor in accordance with the City's Subdivision Regulations.

(c) City Constructed Sewer Infrastructure. The City will construct the sewer improvements shown on **Exhibit F-2** (the "City Constructed Sewer Infrastructure"). Design work, construction start, and construction completion of the City Constructed Sewer Infrastructure shall be in accordance with the timing shown on **Exhibit F-3** (the "Sewer Improvements Schedule"). The City may make adjustments to the scope of the City Constructed Sewer Infrastructure shown in **Exhibit F-2** and provide an updated timeline for construction of such revised City Constructed Infrastructure (the "Revised City Constructed Sewer Infrastructure"), subject to the review and approval by the City Engineer, if the City delivers to Developers (i) engineering studies reviewed and approved by the City Engineer showing that such Revised City Constructed Sewer Infrastructure (a) does not negatively impact the ability of the Project to flow its sewer downstream and (b) provides for access to sewer services consistent with the schedule set forth **Exhibit F-3** on the Effective Date, and (ii) an updated schedule for construction of such Revised City Constructed Sewer Infrastructure reflecting access to an equivalent number of ESFCs for each Phase of development shown in a manner consistent with the timing shown on **Exhibit F-3** on the Effective Date. After delivery of the foregoing, any such changes shall constitute an amendment to **Exhibit F-2** and **Exhibit F-3** upon the delivery of a written instrument signed by the City Manager approving same to the other Parties hereto, and thereafter references to "City Constructed Sewer Infrastructure" herein shall be deemed to refer to such Revised City Constructed Sewer Infrastructure.

Any adjustments solely to the timing of available capacity provided by the City Constructed Sewer Infrastructure shown in **Exhibit F-3** is subject to review and approval by Tellus and the City Engineer. The City and Tellus may amend **Exhibit F-3** by delivery of a written instrument signed by Tellus and the City Manager approving same to all parties hereto.

If the City does not complete the City Constructed Sewer Infrastructure in time or in a manner sufficient to serve a particular Phase of the Development as provided in the Sewer Improvements Schedule for any Phase of the Development (to the extent modified in accordance with the preceding paragraphs):

(i) the City agrees to provide, at its sole cost, pump and haul service for sewage until such time as the City Constructed Sewer Infrastructure is complete to serve that particular Phase of development, and shall approve plats and allow the issuance of building permits in the Development in accordance with Section 5.12 below. In the event that existing permanent infrastructure is insufficient to provide sewer services to any Phase of the Development and the City has to utilize pump and haul to accommodate sewer flows in such Phase of the Development, then the City, at City's cost, will construct the necessary sewer lines and lift station to facilitate a pump and haul operation from the location designated in Exhibit F-1 labeled "Prop. Regional Lift Station." Pump and haul services in any applicable Phase shall continue at City's cost until such time as the permanent sewer infrastructure is constructed in a manner to provide service for all flows produced in the applicable Phase of the Development for which the pump and haul services are being provided. The expected location of the "Proposed Regional Lift Station" is the northeast corner/quadrant

of the future intersection of FM 455 and the collector road illustrated on Exhibit F-1. Any alternative location for the "Proposed Regional Lift Station" shall be approved by the Developers as part of a good faith effort and, provided that the Developers have evidenced their written consent to the City, the location of the "Proposed Regional Lift Station" may be changed without an amendment to this Agreement.; and

(ii) the City agrees that it shall not withdraw any City PID Fees collected for the particular Phase until the City has completed the City Constructed Sewer Infrastructure for such Phase in a manner to permanently provide sewage service for such Phase without any pump and haul services described in (i), above.

5.2 Water Facilities.

(a) Developers' General Obligations. Developers are responsible for design, installation, and construction of the respective on-site water improvements necessary to serve the applicable portion of the Property owned and being developed by each. Subject to the provisions of Section 5.2(c) hereof, Tellus is responsible for design, installation, and construction of certain major water lines as generally depicted in as generally depicted on **Exhibit G** (the "Major Water Improvements") provided that Tellus and the City Engineer may mutually agree to modifications to the sizing and location of such improvements at the time of construction thereof The design of water improvements shall be approved by the City in advance of the construction of same. Subject to the City's obligations under Section 5.20, Tellus shall be responsible for the acquisition of any easements and other property acquisitions necessary for the Major Water Improvements, the size and extent of each such easement or other property interest to be approved by the City provided that the maximum width of the required easement shall not exceed 2.5 times the depth of the water line. The locations of said easements or other property interests shall be approved by the City Engineer or his/her designee as part of the platting process. Tellus' costs of obtaining such easements may be included in the projects to be reimbursed through the Eligible Infrastructure Grant. Tellus is not required to begin construction of a second point of connection to the City's water system until the issuance of the 250th certificate of occupancy for the Project.

(b) Timing of Developers' Obligations. Except as otherwise provided herein, the applicable Developer shall complete in a good and workmanlike manner all on-site water improvements necessary to serve each Phase of the Project owned by such Developer prior to the recordation of the final plat covering such Phase, provided that the applicable Developer may submit the final plat for any Phase prior to the installation of such improvements if it obtains approval for and executes an improvement agreement and provides adequate security therefor in accordance with the City's Subdivision Regulations.

(c) Major Water Improvements. Tellus will construct the Major Water Improvements each as depicted on **Exhibit G**. The Major Water Improvements shall be constructed in the size shown on **Exhibit G** or such dimensions as mutually agreed to by the City Engineer and Tellus at the time of construction of the Major Water Improvements and shall be oversized as mutually agreed to by the City Engineer and Tellus at the time of construction of the Major Water Improvements. The City will reimburse Tellus for the costs of the Major Water Improvements through the Eligible Infrastructure Grant.

5.3 Water and Wastewater Services; Ownership of Water and Wastewater Infrastructure.

(a) The City represents and confirms that it currently has and reasonably expects to continue to have the capacity to provide to the Property continuous and adequate retail water service at times and in capacities sufficient to meet the service demands of the Project as it is developed and reserves such capacity for the Project. The City agrees to provide a will-serve letter for water service upon written request of either of the Developers.

(b) It is acknowledged that the City currently has sufficient wastewater capacity for the expected 957 Equivalent Dwelling Units in Phase 1 and Phase 2 of the Project. The City agrees to make such capacity available to Tellus. The City shall expand the capacity of its wastewater treatment system in accordance with **Exhibit F-2** and the Sewer Improvements Schedule on **Exhibit F-3** to provide for service to each Phase of the Development in accordance with the Sewer Improvements Schedule and agrees to reserve capacity for each Phase of the Development as each phase of the City Constructed Sewer Improvements is completed. The City agrees to provide a will-serve letter for wastewater service upon written request of either of the Developers.

(c) Upon acceptance by the City of the water and wastewater facilities described herein, the City shall operate or cause to be operated said water and wastewater facilities serving the Project and use them to provide service to all customers within the Project at the same rates as similar projects located within the City. Upon acceptance by the City, the City shall at all times maintain said water and wastewater facilities, or cause the same to be maintained, in good condition and working order in compliance with all applicable laws and ordinances and all applicable regulations, rules, policies, standards, and orders of any governmental entity with jurisdiction over same.

5.4 Roadway Facilities and Drainage Improvements.

(a) Developers General Obligations. Developers are respectively responsible for the design, installation, and construction of all on-site roadway facilities required to serve the portions of the Property owned and being developed by such Developer. Subject to the provisions of Section 5.4(d) hereof, Tellus is responsible for design, installation, and construction of certain major road improvements as generally depicted on **Exhibit H** (the "Major Roadway Improvements") and such Major Roadway Improvements shall be reimbursed through the Eligible Infrastructure Grant. The design of all roadway improvements shall be approved by the City in advance of the construction.

(b) Timing of General Obligations. Prior to the recordation of any final plat for any Phase of the Project, the applicable Developer shall complete, in a good and workmanlike manner, construction of all on-site roadway facilities and related improvements necessary to serve such Phase in accordance with construction plans approved by the City; provided that the applicable Developer may submit the final plat for any Phase prior to the installation of such improvements if it obtains approval for and executes an improvement agreement and provides adequate security therefor in accordance with the City's Subdivision Regulations. Thereafter, the roads shall be conveyed to the City for ownership and maintenance.

(c) Drainage/Detention Infrastructure. The Developers shall have full responsibility for designing, installing, and constructing the drainage/detention infrastructure that will serve their applicable portions of the Property and the cost thereof and said infrastructure shall be designed and constructed in accordance with applicable City Regulations. Neither Developer shall be responsible for the design, installation or construction of drainage/detention infrastructure unless located on that Developer's property and a Developer may not construct drainage/detention infrastructure with a material impact on the other Developer's property without the express written consent of the other Developer. Prior to the recordation of the final plat for any Phase of development, the applicable Developer shall complete in a good and workmanlike manner construction of the drainage/detention improvements necessary to serve such Phase provided that the applicable Developer may submit the final plat for any Phase prior to the installation of such improvements if it obtains approval for and executes an improvement agreement and provides adequate security therefor in accordance with the City's Subdivision Regulations. Upon inspection, approval, and acceptance, City shall maintain and operate the drainage improvements for the Property. The HOA, POA, or other entity as applicable, will maintain and operate all detention facilities except to the extent expressly set forth to the contrary in this Agreement.

(d) CR 424 Improvements. Within the Project, Tellus shall construct what is currently referenced on the City's Thoroughfare Plan as CR 424 as a collector road section in an alignment generally consistent with that shown on **Exhibit H-1** unless the Developers mutually agree that the project traffic impact analysis does not support that option. Should the traffic impact analysis not support the layout in **Exhibit H-1** and/or collector road section for CR 424 in **Exhibit D,** Tellus will construct a subsequent alternative option as mutually approved by the City Engineer and Developers. To the extent that an alternative option is provided by Owner, Tellus or City, the applicable other Parties shall have sixty calendar days to review and respond to such alternative option in writing.

5.5 Infrastructure Oversizing. The Developers shall not be required to construct or fund any Public Infrastructure so that it is oversized to provide a benefit to land outside the Property ("Oversized Public Infrastructure") unless, by the commencement of construction, the City has made arrangements to finance the City's portion of the costs of construction of such improvements attributable to the oversizing required by the City from sources other than PID Bond Proceeds, funds from the TIRZ that the City is obligated to utilize for this Project under Section 7.1, Assessments, or the Eligible Infrastructure Grant. In the event either of the Developers is required by the City to construct or cause the construction of any Oversized Public Infrastructure on behalf of the City, the City shall be solely responsible for all costs attributable to the oversizing of the Oversized Public Infrastructure and none of the PID Bond Proceeds, the TIRZ Increment that the City is obligated to utilize for this Project under Section 7.1, or the Eligible Infrastructure Grant shall be utilized for financing the costs of Oversized Public Infrastructure that is attributable to the oversizing of the Oversized Public Infrastructure.

5.6 Mandatory HOA and POA. If a Phase includes single family residential, then Developers will create, in a manner acceptable to the City, an HOA, which HOA, whether one or more, shall be required to levy and collect from home owners within the PID HOA fees (annually, quarterly or monthly) in an amount calculated to maintain the open spaces, parks, common areas, hike and bike trails located in common areas, portions of which trails and parks will be open to the public, right-of-way irrigation systems, raised medians and other right-of-way landscaping, and

screening walls within the PID. Common areas including but not limited to screening, landscaping, gardens, entrances to the Property and right-of-way landscaping shall be maintained solely by the HOA. Maintenance of public rights-of-way landscaping and screening by the HOA shall comply with City Regulations and the HOA shall be subject to enforcement by the City. To the extent that a Phase includes commercial or multifamily development with open space, common areas, and the like that are shared by more than one separately platted parcel, then, such common areas, open space and the like shall be maintained by a POA created for such commercial or multifamily development in the manner set forth in this paragraph or shall be maintained under a reciprocal easement agreement, declaration of covenants, conditions and restrictions, or other covenant regarding land use. To the extent a POA is created, the applicable declarant shall have the option of whether or not to include single-family residential in such POA.

5.7 Illustrative Layout; Concept Plan.

(a) The Illustrative Layout illustrates the approved development layout for the Property but has not been engineered and does not represent the final design that will be approved through the final platting process. Prior to approval of the Zoning, the Developers may revise the Illustrative Layout through an administrative approval, provided the number of residential lots shown on the Illustrative Layout does not increase by greater than ten percent (10%), the numbers of residential lots in each category shown on the Illustrative Layout does not increase by greater than ten percent (10%), and the amount of open space shown on the Illustrative Layout does not decrease by greater than ten percent (10%). Nothing in this paragraph shall preclude Developers from applying directly to the City Council for approval of any Illustrative Layout revisions, including revisions greater than the percentages listed herein. If the Developers submit a revised Illustrative Layout as provided by this section and the City Manager or his/her designee determines that the Illustrative Layout should be administratively approved, the City Manager or his or her designee shall cause the revised Illustrative Layout to be attached to the official version of this Agreement on file with the City's Secretary's office, and the Developers shall record a memorandum of the revised Illustrative Layout in the Real Property Records.

(b) A Concept Plan will be required as part of the zoning process identified in Section 9.1 and the Concept Plan, once approved by the City, shall be deemed to fully supersede and replace the Illustrative Layout for all purposes. Revisions to the Concept Plan that is part of approval of zoning may be subsequently revised with approval by the City Council and/or the Planning and Zoning Commission through the normal zoning process.

(c) If the Developers submit a Concept Plan as provided by this section and the City Manager or his/her designee determines that the Concept Plan should be administratively approved, the City Manager or his or her designee shall cause the revised Concept Plan to be attached to the official version of this Agreement on file with the City's Secretary's office, and Developers shall record a memorandum of the revised Concept Plan in the Real Property Records.

5.8 Community Amenities. Tellus will (or will cause) the design, construction, maintenance, and operation of certain amenities in the Project as described in (a) and (b) below.

(a) Tellus shall be required to construct the following three (3) amenities:

(1) An amenity center located in Phase 1 (the "Phase 1 Amenity Center") on a minimum 2 -acre site containing an amenity center building of at least 4,000 sf air conditioned square feet which can be split between multiple buildings, a minimum 3,500 sf -size swimming pool which can be split between multiple pools, bathrooms, a playground and an open recreation area, which amenity center shall commence construction prior to the 250th building permit and shall be completed within twenty four (24) months of commencement;

(2) A second amenity center located generally as shown on **Exhibit C** containing an amenity center building or shaded structure, bathrooms, a playground and an open recreation area to commence construction prior to the 1,750 building permit and shall be completed within eighteen (18) months of commencement;

(3) A working farm-style amenity center with operational farming facilities (the "Farm Amenity"). Tellus will commence construction of the first phase of the Farm Amenity prior to the 600th building permit and shall complete construction of the first phase within eighteen (18) months of commencement. The Farm Amenity shall be solely owned, operated and maintained by Tellus, a Tellus controlled entity or the HOA. The Farm Amenity will include a minimum five (5) -acre programmed site adjacent to the working farm. The first phase of the Farm Amenity will include the following features at a minimum: a working farm, a structure for agricultural education, a multi-use field area for events, and a parking lot;

(b) Tellus will (or will cause) the design, construction, maintenance, and operation of certain amenities in the Project. Tellus shall be required to construct four (4) of the following nine (9) amenities (such four (4) amenities, together with the three required amenities in this section, collectively, the "Community Amenities"):

(i) playground (2-5 years of age);

(ii) playground (5-8 years of age);

(iii) sand volleyball court or tennis court or pickleball court;

(iv) basketball court;

(v) the trails and open space described in Section 5.9;

(vi) outdoor workout equipment along hike and bike trails;

(vii) Three or more pocket parks at least 1 acre in size each;

(viii) dog park; and

(ix) park benches, trash cans, and pet stations along the trail and in the dog.

General depictions of a portion of the Community Amenities, which are provided as examples but are not binding on Tellus, are included on Exhibit I. To the extent that any Community Amenities may be included as PID Projects pursuant to the PID Act, the City may, at the City's sole discretion, accept dedication of such Community Amenities, and such Community Amenities may be maintained by the City or the HOA, as applicable. To the extent any Community Amenities are

not owned or dedicated to the City and maintained by the City, such Community Amenities shall be owned and maintained by the HOA.

5.9 Parkland Dedication Credit. Tellus shall timely improve and construct the Farm Amenity and timely construct trails and dedicate such trails as outlined in this Section 5.9, and the applicable Developer shall dedicate open space in the final plat for each phase each as generally depicted on **Exhibit J** (collectively, the "Trails and Open Space Acreage"). Provided the Developers cause such Trails and Open Space Acreage to be dedicated for such purposes, Developers shall be deemed to have satisfied all applicable parkland dedication or improvement requirements or fees required in lieu thereof, of any kind whatsoever and no Park Fees shall be imposed on the Property. To be considered timely for any given Phase, with respect to open space, the applicable Developer shall dedicate the open space applicable to such Phase as shown on **Exhibit J** at the time of the filing of the final plat for such Phase, with respect to the trails applicable to such Phase, and complete construction of such trails within nine months of the recordation of the final plat for such Phase, subject to force majeure. For any Phase that is developed without Developer timely causing such Trails and Open Space Acreage to be constructed and dedicated as shown on **Exhibit J**, the City's otherwise applicable Park Fees shall apply and not be waived for such Phase. Notwithstanding the foregoing to the contrary, by execution of this Agreement, Owner shall be deemed to have satisfied all applicable parkland dedication or improvement requirements or fees required in lieu thereof, of any kind whatsoever and no Park Fees shall be imposed on Zone III and Zone IV (as identified on the Illustrative Layout). Any dedication of Trail and Open Space Acreage under this Section 5.9 may be by public access easement or fee dedication at the election of the applicable Developer. For the avoidance of doubt, the Developers shall not be required to provide a public access easement or dedication of any amenity center described in Section 5.8.

5.10 Impact Fees.

(a) Impact Fees shall be assessed and collected on the Property at the rates in effect at the time of submission of an application for a building permit. The City shall collect Impact Fees from all third-party permit applicants within the Property. Upon the payment of Impact Fees, such payments shall be sequestered into a separate account created with the City (the "Sherley Farms Impact Fee Account") to facilitate the payment of the Eligible Infrastructure Grant described in Section 7.3 hereof.

(b) To the extent that the Eligible Infrastructure is not currently included in the City's CIP, the City agrees to take all necessary steps to include Eligible Infrastructure, along with any additional Authorized Improvements that may reasonably qualify as Capital Improvements, in the City's CIP. The City acknowledges that Tellus is providing certain Capital Improvements on the Property and the Eligible Infrastructure, to the City at the initial cost of Tellus.

5.11 Dedication of Water Tank Site and School Site.

(a) When requested by Anna Independent School District ("Anna ISD"), Tellus shall convey or dedicate the School Site to Anna ISD and such conveyance shall include restrictive covenants that shall prevent certain commercial uses and electronic, radio, electromagnetic or other similar wireless transmission equipment.

(b) Tellus shall, at the request of the City after Tellus has taken ownership of the applicable portion of the Property, convey a site of up to 1.5 acres located in the PID to the City for use in construction of an elevated water storage tank. The elevated storage tank site (the "Elevated Storage Tank Site") shall be in a location mutually agreeable to the City and Tellus at the time of conveyance and such conveyance shall include restrictive covenants that shall prevent certain commercial uses and electronic radio, electromagnetic or other similar wireless transmission equipment. The dedication and conveyance of such Elevated Storage Tank Site shall be reimbursable through the Eligible Infrastructure Grant.

(c) Notwithstanding subsection (b), above, if the City determines to construct a fire station at the Elevated Storage Tank Site, then Tellus shall increase the size of the conveyance to a total of three (3) contiguous acres with the same restrictive covenants described in said subsection (b); provided, however, that such restrictive covenants shall not restrict the use of any equipment that is necessary for emergency services communications purposes.

(d) In addition to subsections (a), (b) and (c), above, if the City adopts an ordinance governing electronic radio, electromagnetic or other similar wireless transmission equipment, the Developers and the City shall endeavor in good faith to amend the applicable zoning to govern the use of electromagnetic transmission equipment within the Property.

5.12 Withholding of Building Permits, Etc. The City shall not be required to issue any building permits or certificates of occupancy or provide utilities for any structure on the Property until after the applicable final plat is approved, the City approves the applicable maintenance bond(s) required under Section 4.4, and the City issues final written acceptance of any Public Infrastructure necessary to serve such applicable portion of the Property with utility, fire safety (i.e., paving complete and water system/hydrants installed, tested and pressurized) and roadway service; provided that the City shall allow for the issuance of building permits for up to 10% of the single-family building permits in any Phase of the Development once the applicable Developer has achieved fire safety. To assist in the determination as to whether building permits for any Phase of development should be issued, the applicable Developer shall include all Public Infrastructure necessary to serve such Phase with utility, fire safety, and roadway service in the construction plans required to be submitted under applicable City Regulations. Notwithstanding the foregoing, the City shall not unreasonably withhold plat approval for any Phase of development and shall issue building permits and certificates of occupancy and provide utilities for any structure on the Property if the applicable Public Infrastructure to provide utility and roadway service other than the City Constructed Sewer Infrastructure shown on **Exhibit F-2** is complete and pump and haul service is being provided pursuant to Section 5.1 of this Agreement.

5.13 Governing Regulations. Development of the Property shall be governed by the following regulations (collectively, the "Governing Regulations," all of which are incorporated into this Agreement as if set forth in full):

(a) City Code, Article 9.02, the subdivision regulations of the City, in effect on the Effective Date (the "Subdivision Regulations");

(b) except as amended by the Development Standards (defined below), the comprehensive zoning ordinance of the City, in effect on the Effective Date (the "Zoning

Ordinance");

(c) City Code, Article 9.05, in effect on the Effective Date (the "Sign Ordinance");

(d) the Illustrative Layout set forth on **Exhibit C** and the development regulations for the Property set forth on **Exhibit D** (except as otherwise approved in accordance with Section 5.15 in the event of conflicts) (the "Development Standards");

(e) upon annexation pursuant to Section 9.1, the uniform building codes, as amended from time to time, including any local amendments thereto adopted by the City (the "Building Codes"). The term "Building Codes," as applied to a particular building shall mean the Building Codes in effect on the date the first application is filed for a building permit for the building in question. For the avoidance of doubt, the Building Codes shall only apply to the Property from and after annexation of the Property. As it relates solely to Property Public Infrastructure for any given Phase of the Project—notwithstanding any provision of this Agreement—the applicable construction standards (including, without limitation, the Building Codes) shall be those that the City has duly adopted at the time of the filing of an application for a preliminary plat for such Phase containing the Property Public Infrastructure in question; and

(f) except as set forth in this Agreement to the contrary, any other applicable provisions of Chapter 4 (Building Regulations), Chapter 6 (Fire Prevention and Protection), Chapter 9 (Planning and Development Regulations), Chapter 12 (Utilities) and Appendix A (Fee Schedule) of the City Code in effect on the Effective Date.

The Governing Regulations are the controlling regulations for development of the Property, and no other City Regulations, rules, standards, policies, orders, guidelines, or other City-adopted or City-enforced requirements of any kind (including but not limited to any moratorium adopted by the City) apply to the use or development of the Property to the extent such regulations or requirements are in conflict with the Governing Regulations or this Agreement. The Governing Regulations are considered part of this Agreement and are incorporated herein by reference for all purposes.

5.14 Compliance with Materials and Methods Regulations. It is expressly understood that the City Regulations (as amended by the Governing Regulations and this Agreement) are enforceable as relates to the Property and its use and development, including but not limited to any such City Regulations that would otherwise be unenforceable under Chapter 3000 of the Texas Government Code ("Materials and Methods Regulations") and the Material and Methods Regulations are incorporated herein as if set forth in full; provided, however, to the extent of any conflict between the requirements of the Materials and Methods Regulations and the requirements of this Agreement, this Agreement shall control. The Zoning Ordinance shall also be considered to be Materials and Methods Regulations to the extent that its requirements and restrictions would otherwise be unenforceable under Chapter 3000 of the Texas Government Code

5.15 Conflicts. When not in conflict with the terms and conditions of this Agreement, the development of the Property shall be subject to all applicable City Regulations, including but not limited to the City's subdivision regulations and engineering design standards. In the event of

any conflict between the Development Standards and the Zoning Ordinance, Sign Ordinance, or Building Codes, the Development Standards shall control until the PD Zoning (as defined herein) has been approved by the City. After the PD Zoning has been approved for the Property, in the event of a conflict between the PD Zoning and the Development Standards, the Zoning Ordinance, Sign Ordinance, or Building Codes, the PD Zoning shall control for such portion of the Property subject to the PD Zoning, and no amendment to the applicable PD Zoning shall require an amendment to this Agreement. In the event of a conflict between the Governing Regulations and the City Regulations, the Governing Regulations shall control. In the event of any conflict between this Agreement and any other ordinance, rule, regulation, standard, policy, order, guideline or other City-adopted or City-enforced requirement, whether existing on the Effective Date or hereinafter adopted, unless otherwise agreed by the Parties, this Agreement shall control. In the event of any conflict between the Illustrative Layout and the remainder of the Development Standards in **Exhibit D**, the remainder of the Development Standards in **Exhibit D** shall control. In the event of any conflict between any future Concept Plan and the Development Standards in **Exhibit D**, the Development Standards in **Exhibit D** shall control (except for modifications to the Illustrative Layout that are allowed pursuant to the terms of the Development Standards and/or Zoning Ordinance).

5.16 Phasing. The Property may be developed in phases and the applicable Developer must submit the appropriate plat(s) for each Phase, and, if permitted under applicable law, may submit a replat or amending plat for all or any portions of the Property. Any plat, replat or amending plat shall be in conformance with applicable City Regulations and be subject to City approval.

5.17 Vested Rights. This Agreement shall constitute a "permit" (as defined in Chapter 245) that is deemed filed with the City on the Effective Date.

5.18 Approval of Plats/Plans. Approval by the City, the City Engineer, or other City employee or representative, of any plans, designs, or specifications submitted by the applicable Developer pursuant to this Agreement or pursuant to applicable City Regulations shall not constitute or be deemed to be a release of the responsibility and liability of the applicable Developer, its engineers, employees, officers, or agents for the accuracy and competency of their design and specifications. Further, any such approvals shall not be deemed to be an assumption of such responsibility and liability by the City for any defect in the design and specifications prepared by the applicable Developer or the applicable Developer's engineers, or their respective officers, agents, servants or employees, it being the intent of the Parties that approval by the City Engineer or his/her designee signifies approval on only the general design concept of the improvements to be constructed.

5.19 Agricultural Exemption. The City acknowledges that some or all of the Property may now have or may in the future have an agricultural, timber, or wildlife management use tax classification, and the City may not request removal of any such tax classification for any Property within the PID until PID Bonds secured by Assessments levied in the applicable portion of the PID are issued to pay for the costs of the PID Projects and related costs and development within the applicable portion of the PID has commenced to a degree that would trigger a change in use tax exemption under state law, notwithstanding any waiver of such exemption for other political subdivisions or public entities.

5.20 Eminent Domain. Tellus agrees to use commercially reasonable efforts to obtain all third-party rights-of-way, consents, or easements, if any, required for any off-site Public Infrastructure. To the extent required, the Developers agree to use commercially reasonable efforts to obtain all third-party rights-of-way, consents, or easements, if any, required for any on-site Public Infrastructure being constructed by such Developer. If, however, the applicable Developer is unable to obtain such third-party rights-of-way, consents, or easements within ninety (90) days of sending an initial offer to the owner of such property to purchase the needed easements and right-of-way, the City agrees to take reasonable steps to secure same (subject to City Council authorization after a finding of public necessity) through the use of the City's power of eminent domain. The City shall request and order any appraisal required in connection with the applicable Developer's (if requested by such Developer) or the City's acquisition of such third-party rights-of-way, consents, or easements as described in the preceding two sentences, and the applicable Developer shall pay the costs of such appraisal. The applicable Developer shall be responsible for funding all reasonable and necessary legal proceeding/litigation costs, attorney's fees and related expenses, and appraiser and expert witness fees (collectively, "Eminent Domain Fees") actually incurred by the City in the exercise of its eminent domain powers that for any reason are not funded by the PID Bond Proceeds and shall escrow with a mutually agreed upon escrow agent the City's reasonably estimated Eminent Domain Fees both in advance of the initiation of each eminent domain proceeding and as funds are needed by the City. Provided that the escrow fund remains appropriately funded in accordance with this Agreement, the City will use all reasonable efforts to expedite such condemnation procedures so that the Public Infrastructure can be constructed as soon as reasonably practicable. If the City's Eminent Domain Fees exceed the amount of funds escrowed in accordance with this paragraph, the applicable Developer shall deposit additional funds as requested by the City into the escrow account within ten (10) days after written notice from the City. Any unused escrow funds will be refunded to the applicable Developer within thirty (30) days after any condemnation award or settlement becomes final and non-appealable. Nothing in this section is intended to constitute a delegation of the police powers or governmental authority of the City, and the City reserves the right, at all times, to control its proceedings in eminent domain.

To the extent Eminent Domain Fees are paid by a Developer, the applicable Developer may seek reimbursement of any or all eligible Eminent Domain Fees from PID Bonds, or if PID Bonds are not issued, Assessments.

5.21 Payment of City PID Fee.

Tellus shall deposit or cause to be deposited the amount of the City PID Fee in an identifiable City-owned escrow account that contains the full amount of the City PID Fee (the "City PID Fee Account") for a particular Phase of Development and shall provide proof of such deposit to the City on the date Assessments are levied for such Phase or a subsequent date that is no later than the 30th day after the closing date of the PID Bonds for such Phase of Development. No Party shall withdraw from or otherwise reduce or in any manner encumber the amount deposited into the City PID Fee Account for any Phase of Development until such time as the City Constructed Sewer Improvements necessary to provide sewer service to such Phase have been completed. Upon the completion of the City Completed Sewer Improvements for the applicable Phase, the City may withdraw the full amount in the City PID Fee Account and utilize same for any municipal purpose. The City PID Fee shall be calculated in accordance with the City PID

Policy and shall be based upon the number of single-family residential lots included within the applicable Phase of Development that are being assessed. For the avoidance of doubt, the "single-family residential lot" shall include any townhome (whether attached or detached) located in the PID. The amount of the City PID Fee shall not increase and the City PID Fee shall not be reimbursable from Assessments, PID Bond Proceeds or the TIRZ.

5.22 Rental Property. It is a material breach of this Agreement if a Party knowingly sells—in any single transaction or combination of transactions—a total of more than five percent (5%) of the total number of single-family detached lots projected to be within the Project to one or more Institutional Investors that intend to own and rent or lease single-family residences within the Project.

SECTION 6
PID BONDS

6.1 PID Bond Issuance. Subject to the satisfaction of conditions set forth in this section, the City may issue PID Bonds solely for the purposes of acquiring or constructing PID Projects. Either of the Developers may request issuance of PID Bonds by filing with the City a list of the PID Projects within their property to be funded with the PID Bonds and the estimated costs of such PID Projects. Developers acknowledge that the City may require at that time a professional services agreement that obligates the applicable Developer to fund the costs of the City's professionals relating to the preparation for and issuance of PID Bonds, which amount shall be agreed to by the Parties and considered a cost payable from such PID Bonds. The issuance of PID Bonds is subject to the following conditions:

(a) The City has determined that (a) there will be no negative impact on the City's creditworthiness, bond rating, access to or cost of capital, or potential for liability and (b) the PID Bonds assessment level, structure, terms, conditions and timing of the issuance of the PID Bonds are reasonable for the PID Projects Costs to be financed and that there is sufficient security for the PID Bonds to be creditworthy.

(b) All costs incurred by the City that are associated with the administration of the PID shall be paid out of special assessment revenue levied against property within the PID. City administration costs shall include without limitation those associated with continuing disclosure, compliance with federal tax law, agent fees, staff time, regulatory reporting and legal and financial reporting requirements.

(c) The adoption of a Service and Assessment Plan and an Assessment Ordinance levying assessments on all or any portion of the PID benefitted by such PID Projects in amounts sufficient to pay all costs related to such PID Bonds.

(d) Unless otherwise agreed to by the City, the aggregate principal amount of PID Bonds issued and to be issued shall be estimated to be $300,000,000.

(e) If requested by the City, delivery of an Independent Appraisal to the City confirming that the special benefits conferred on the properties being assessed for the PID Projects increase the value of the property by an amount at least equal to the amount assessed against such property.

(f) Approval by the Texas Attorney General of the PID Bonds and registration of the PID Bonds by the Comptroller of Public Accounts of the State of Texas.

(g) The applicable Developer is current on all taxes, assessments, fees and obligations to the City including without limitation payment of Assessments.

(h) The applicable Developer is not in material default under this Agreement or any other agreement with the City.

(i) No outstanding PID Bonds are in default and no reserve funds established for outstanding PID Bonds have been drawn upon that have not been replenished.

(j) The Administrator has certified that the specified portions of the costs of the PID Projects to be paid from the proceeds of the PID Bonds are eligible to be paid with the proceeds of such PID Bonds; therewith, such approval not to be unreasonably withheld, conditioned or delayed upon presentation of a certificate in compliance with the applicable Indenture.

(k) The PID Projects to be financed by the PID Bonds have been or will be constructed according to the approved Development Standards imposed by this Agreement including without limitation any applicable Governing Regulations and/or City Regulations.

(l) The maximum maturity for each issuance of PID Bonds shall not exceed 30 fiscal years from the date of delivery thereof.

(m) The final maturity for any PID Bonds shall be not later than 50 years from the Effective Date.

(n) The City has determined that the PID Bonds meet all regulatory and legal requirements applicable to the issuance of the PID Bonds.

(o) If the applicable portion of PID Projects has not already been constructed and to the extent PID Bond Proceeds are insufficient to fund such PID Projects Cost, plus private costs to reach final lot completion, the City may require the applicable Developer to, at time of closing the PID Bonds, provide evidence of (i) available funds to the applicable Developer or any corporate parent of the applicable Developer and made available to the Developer, (ii) evidence of financial security from a Lender (as defined herein) of loan funds available under a loan, letter of credit or other credit facility extended to the applicable Developer or any corporate parent of the applicable Developer and made available to the applicable Developer by a financial institution or other lender (a "Lender") for the purpose of development of the Authorized Improvements, equal to or greater than the difference between the PID Projects Costs and the PID Bond Proceeds available to fund such PID Projects Costs plus private costs to reach final lot completion or (iii) a completion agreement; or any combination of (i), (ii) or (iii) in the discretion of the applicable Developer. If the applicable Developer provides evidence of available funds or fiscal security as described in the preceding sentence in connection with a series of PID Bonds, the applicable Developer shall not be required to provide any up-front cash deposit to fund

the applicable PID Projects not otherwise funded through the applicable series of PID Bonds.

(p) No information regarding the City, including without limitation financial information, shall be included in any offering document relating to PID Bonds without the consent of the City.

(q) The applicable Developer agrees to provide periodic information and notices of material events regarding the applicable Developer and the applicable Developer's development of their portion of the Project and any continuing disclosure agreements executed by the applicable Developer in connection with the issuance of PID Bonds.

(r) The applicable Developer is not in default under a Developer Continuing Disclosure Agreement.

(s) The issuance of any Refunding Bonds, the amount of assessment necessary to pay the Refunding Bonds shall not exceed the remaining principal amount of assessments that were levied to pay the PID Bonds that are being refunded.

(t) The gross tax equivalent rate for the annual installments of the Assessments shall not exceed $1.35 per $100.00 of taxable assessed valuation prior to application of the TIRZ Revenue (which maximum total tax equivalent rate shall be measured based on the estimated build out value of the applicable portion of the Property), without prior written consent of the City, in its sole discretion, which written consent may be evidenced by the City's adoption of an Assessment Ordinance without the necessity of amending this Agreement.

(u) The City may not require the value to lien ratio for any PID Bonds to be higher than 2:1; provided that the City may allow for a lesser ratio through the adoption of a resolution, Bond Ordinance, Assessment Ordinance or other applicable council action that authorizes a lesser value to lien ratio without the necessity of amending this Agreement. Any such value-to-lien ratio shall apply solely to the portion of the Assessments securing the PID Bonds.

(v) The applicable Developer and the City shall have entered into a Reimbursement Agreement with respect to the Phase primarily benefitted by such PID Bonds.

(w) The Phase 1 Amenity Center shall be fully completed with the swimming pool having received all required approvals for operation and the building thereon having received a certificate of occupancy for any PID Bonds issued after the second series of PID Bonds.

6.2 Disclosure Information. Prior to the issuance of PID Bonds by the City, the applicable Developer agrees to provide all relevant information, including financial information, that is reasonably necessary in order to provide potential bond investors with a true and accurate offering document for any PID Bonds. The applicable Developer agrees, represents, and warrants

that any information provided by the applicable Developer for inclusion in a disclosure document for an issue of PID Bonds will not, to the applicable Developer's actual knowledge, contain any untrue statement of a material fact or omit any statement of material fact required to be stated therein or necessary to make the statements made therein, in light of the circumstances under which they were made, not misleading, and the applicable Developer further agrees that it will provide a certification to such effect as of the date of the closing of any PID Bonds.

6.3 Tax Certificate. If, in connection with the issuance of the PID Bonds, the City is required to deliver a certificate as to tax exemption (a "Tax Certificate") to satisfy requirements of the United States Internal Revenue Code, the applicable Developer agrees to provide, or cause to be provided, such facts and estimates as the City reasonably considers necessary to enable it to execute and deliver its Tax Certificate. The Developers each represent that such facts and estimates will be based on its reasonable expectations on the date of issuance of the PID Bonds and will be, to the best of the knowledge of the officers of the applicable Developer providing such facts and estimates, true, correct and complete as of such date. To the extent that it exercises control or direction over the use or investment of the PID Bond Proceeds, including, but not limited to, the use of the PID Projects, the Developers further agree that they will not knowingly make, or permit to be made, any use or investment of such funds that would cause any of the covenants or agreements of the City contained in a Tax Certificate to be violated or that would otherwise have an adverse effect on the tax-exempt status of the interest payable on the PID Bonds for federal income tax purposes.

SECTION 7
TAX INCREMENT REINVESTMENT ZONE; CHAPTER 380 GRANTS

7.1 Tax Increment Reinvestment Zone. Prior to the issuance of the first series of PID Bonds, the City will create a TIRZ coterminous with all of the Property. The TIRZ may be divided into zones or subzones for each Phase of development and may be divided into subzones for single-family residential development, which single-family development may include townhome or other attached residential product (a "Single-Family Subzone") and for property containing mixed use development, which mixed use development may include commercial, multi-family or retail development and the like (a "Commercial Subzone"). The base year of any subzone of the TIRZ shall be the year in which the subzone is created. The City agrees to use fifty percent (50%) of the ad valorem tax increment generated by the TIRZ (the "Tax Increment"), for a period of up to forty (40) years for the purposes and in the manner described in this paragraph. The Tax Increment generated within the TIRZ in any Single-Family Subzone shall be used for each Phase (i) first, to pay the Administrative Expenses for the TIRZ and (ii) second to, on a parcel-by-parcel basis, offset or pay a portion of any Assessment levied on assessed parcels for the costs of Authorized Improvements. The Tax Increment generated in any Commercial Subzone shall be placed into a separate account as set forth in the Project and Finance Plan and be used (x) first, to pay the Administrative Expenses for the TIRZ, (y) second to, on a parcel-by-parcel basis, offset or pay a portion of any Assessment levied on assessed parcels in the Commercial Subzone for the costs of Authorized Improvements and (z) third, to the extent such property is not subject to Assessments or all Tax Increment generated by a particular parcel in the Commercial Subzone is not needed to offset Assessments, to pay to the Owner the remaining Tax Increment generated in the Commercial Subzone, in the form of a Chapter 380 Grant for costs of Authorized Improvements not otherwise reimbursed under the terms of this Agreement. The City will enter into a separate Chapter 380

Agreement with the Owner for the Chapter 380 Grant related to the Commercial Subzone upon terms mutually agreeable to the Owner and the City and consistent with this Agreement. The City shall take steps to consider and adopt or approve the TIRZ Documents, including the Project and Finance Plan, necessary to effectuate this Section 7. Any amount of the TIRZ Increment that is not required to be used as set forth in this paragraph may be used by the City for any municipal purpose.

7.2 TIRZ Funds. The Tax Increment obtained from the TIRZ subzones shall be placed into a separate accounts as appropriate and shall be used as described above and the Tax Increment and uses herein shall be incorporated into the Project and Finance Plan.

7.3 Eligible Infrastructure Grant. In consideration of Tellus' agreement to construct certain Authorized Improvements as outlined herein, the City shall enter into a Chapter 380 Agreement (the "Impact Fee 380 Agreement") with Tellus to provide a grant (the "Eligible Infrastructure Grant") to reimburse Tellus for the costs of the Elevated Storage Tank Site and the water, wastewater, roadway, and drainage improvements shown on **Exhibits F-1**, **G**, and **H** (collectively, the "Eligible Infrastructure") in an amount up to the same amount of the total Impact Fees collected from all portions of the Property. The Eligible Infrastructure Grant shall be payable to Tellus on a quarterly basis after the City's approval of the submission of evidence of costs of the Eligible Infrastructure as more particularly described in the Impact Fee 380 Agreement solely from Impact Fees deposited in the Sherley Farms Impact Fee Account in accordance with Section 5.10.

SECTION 8
PAYMENT AND REIMBURSEMENT OF PID PROJECTS

8.1 Payment of Costs of PID Projects. The Parties understand that PID Bond Proceeds and/or the proceeds from Assessments will be used to reimburse the Developers for certain PID Projects Costs related to the PID Projects and, in the event PID Bond Proceeds and/or proceeds from Assessments are not available at the time that all or a portion of the PID Projects are substantially complete and the City is ready to accept said PID Projects or portion thereof, PID Bond Proceeds and/or proceeds from Assessments, once available, will be used to reimburse the applicable Developer for said PID Projects Cost following acceptance by the City. Such reimbursement will be governed by the terms of the Reimbursement Agreement to be entered into between the applicable Developer and the City for the applicable Phase.

8.2 Improvement Account of the Project Fund and Developer Improvement Account. The Improvement Accounts of the Project Fund and the Developer Improvement Account shall be administered and controlled by the City and funds in the Improvement Account of the Project Fund and the Developer Improvement Account shall be deposited and disbursed in accordance with the terms of the respective Indenture.

8.3 Cost Overrun. If the total PID Projects Cost for any Phase of development exceeds the total amount of monies on deposit in the Improvement Account of the Project Fund and the Developer Improvement Account (a "Cost Overrun"), the applicable Developer shall be solely responsible for the Cost Overrun, except as provided in Section 8.4.

8.4 Cost Underrun. If, upon the completion of construction of an PID Project (or segment or section thereof) and payment or reimbursement for such PID Project (or segments or section thereof), there are Cost Underruns, any remaining Budgeted Cost(s) may be available to pay Cost Overruns on any other PID Project without amending the SAP. The elimination of a category of PID Projects as set forth in the Service and Assessment Plan will require an amendment to the SAP. Prior to the completion of all of the PID Projects within an improvement category, as listed in the applicable SAP and the PID, funds available from an improvement category may be used as Cost Underruns and applied to another Improvement category without approval of the City. If, upon completion of the PID Projects in any improvement category, there are funds remaining in any improvement categories, those funds can then be used to reimburse the applicable Developer for any qualifying costs of the PID Projects that have not been previously paid.

SECTION 9
ANNEXATION AND POST-ANNEXATION MATTERS

9.1 Annexation.

(a) Annexation. Within sixty (60) days after the Effective Date of this Agreement, Owner, Tellus (to the extent Tellus owns any portion of the Property), and any other owner(s) of any part of the Property shall submit a voluntary irrevocable petition for annexation of the Property to the City in compliance with Chapter 43, Texas Local Government Code, or other applicable law, as amended (an "Annexation Petition"). Owner, Tellus (to the extent Tellus owns any portion of the Property), and any other owner(s) of any part of the Property agree to execute and supply any and all instruments and/or other documentation necessary for the City to legally annex the Property. The City shall, in accordance with applicable statutory requirements, take all steps necessary to complete the annexation of the Property within sixty (60) days following submission of the Annexation Petition. Should the City fail to complete the annexation of the Property in accordance with this Agreement, Owner and Tellus shall each have the right to terminate this Agreement with respect to Property owned by Owner or Tellus with written notice to the City and, upon such termination, the applicable portion of the Property shall be immune to involuntary annexation by the City for a period of thirty (30) years thereafter regardless of any change of law, and the City shall be subject to the provisions of subsection (c) herein for creation of a municipal utility district. The City shall, subject to Section 9.1(b) in accordance with applicable statutory requirements, take all steps necessary to complete the annexation of the Property immediately prior to any ordinance adopting the PD Zoning.

(b) Zoning. As soon as is practicable, after or in conjunction with the annexation of the Property, the City shall consider planned development zoning for the Property consistent with the Development Standards, the Illustrative Layout, and this Agreement (the "PD Zoning"). The Parties agree that the Illustrative Layout attached hereto as **Exhibit C**, the Development Standards attached hereto as **Exhibit D**, together with the City Regulations, and the applicable provisions of this Agreement memorialize the approved plan for development of the Property as of the Effective Date. Through this Agreement, Owner and Tellus expressly consent and agree to the PD Zoning of the Property. Any such zoning of the Property shall otherwise be in accordance with all procedures set forth in the applicable City Regulations. Should the City Council fail—within 60 days after submittal of a complete and sufficient zoning application—to approve the PD Zoning, or approves zoning on the Property that is in any way more restrictive

than the PD Zoning without the consent of Owner and Tellus, then Owner and Tellus shall each have the right to (i) petition for disannexation of their applicable portion of the Property upon written request delivered to the City or (ii) terminate this Agreement and petition for disannexation of their applicable portion of the Property with written notice to the City and, in the event Owner and Tellus exercise the rights in (i) or (ii), and upon receipt of a request or notice delivered pursuant to (i) or (ii), the City shall disannex the applicable portion of the Property from the City as soon as is practicable, and the applicable portion of the Property shall be immune to involuntary annexation by the City for a period of thirty (30) years thereafter regardless of any change of law and the City shall be subject to the provisions of subsection (c) below for creation of a municipal utility district. Notwithstanding the foregoing or any other provision of this Agreement, the failure of Owner and Tellus to submit a zoning application that complies with all provisions of the Zoning Ordinance applicable to the submittal of a zoning application shall be deemed a failure to submit a complete and sufficient zoning application, provided that the City provides notice within forty-five (45) days of such a submittal stating each deficiency that Owner and Tellus shall be required to cure in order for such zoning application be processed and considered for approval.

(c) Disannexation; Creation of Municipal Utility District. In the event that (i) the City defaults under (a) or (b) of this Section 9.1 or (ii) PID Bonds for a particular Phase of the Project are not issued as a result of any act or omission of the City, including the City's refusal to issue such PID Bonds, and a period of ninety (90) days to cure such non-occurrence has passed after the applicable Developer provides written notice of such non-occurrence or default under this Section 9.1, then (a) the City shall—if the applicable Developer petitions for disannexation—disannex the Property for the applicable Developer or the applicable portion of the Property for which PID Bonds have not been issued (in the case of a failure under item (ii) of this Section 9.1(c) within thirty (30) days of the filing of the disannexation petition by the applicable Developer and such property shall thereafter be immune to involuntary annexation by the City for a period of thirty (30) years and (b) the applicable Developer shall provide notice to the City of its intent to form a municipal utility district or similar utility or improvement district created by special act of the Texas Legislature or the TCEQ or, if necessary, any other agency with jurisdiction (a "MUD") on the portion of the Property disannexed pursuant to this paragraph and, upon such notice, the City shall be deemed to have consented to the formation of the MUD with no further action of the City or City Council required; provided that the City shall take any necessary steps or provide any documents necessary to evidence the City's consent to the creation of the MUD to the TCEQ, the Texas Attorney General or other agency or body with regulatory powers over the MUD. If PID Bonds have been issued for prior Phases of the PID or assessments been levied, those Phases shall remain within the limits of City. For the avoidance of doubt and notwithstanding the foregoing or any other provision of this Agreement, this paragraph shall not apply with respect to a failure under item (ii) above and disannexation shall not be required with respect to item (ii) above in the event that PID Bonds for a particular Phase of the Project are not issued by the City because the conditions and requirements set forth in Section 6.1 that are in the reasonable control of the applicable Developer, which provisions shall solely include items (g), (h), (k), (o), (q), (r), and (w) set forth under Section 6.1, and in Section 6.2 have not been satisfied by the applicable Developer. Other than as provided in Section 9.1, Developers waive the right to file a petition or otherwise seek removal of any portion of the Property from the City unless and only to the extent the City is required to disannex any part of the Property under this paragraph.

(d) Survival. In the event Owner or Tellus terminates this Agreement with respect to a portion of the Property in accordance with this Section 9, Owner's and Tellus' respective rights and remedies under this section, including disannexation and the applicable portion of the Property's immunity to future involuntary annexation, shall survive such termination.

(e) Agreement for Services. Pursuant to Section 43.0672, Texas Local Government Code, this Agreement shall constitute an agreement for the provision of services to the Property and, except as expressly provided otherwise herein, the City shall, immediately upon the effective date of any annexation, provide the Property with all those municipal services currently offered within the City, including those which may be offered in the future, without discrimination. The Developers are not required to enter into this Agreement and do so in reliance upon the representations and covenants of the City herein. The annexation procedures described in plain language in this Agreement require the Developers' consent. The Parties acknowledge and agree that—prior to the Effective Date—the City fully satisfied the written disclosure requirements under Section 212.172(b-1) of the Texas Local Government Code.

SECTION 10
EVENTS OF DEFAULT; REMEDIES

10.1 Events of Default. No Party shall be in default under this Agreement until notice of the alleged failure of such Party to perform has been given in writing (which notice shall set forth in reasonable detail the nature of the alleged failure) and until such Party has been given a reasonable time to cure the alleged failure (such reasonable time to be determined based on the nature of the alleged failure, but in no event more than thirty (30) days (or any longer time period to the extent expressly stated in this Agreement as relates to a specific failure to perform) after written notice of the alleged failure has been given. Notwithstanding the foregoing, no Party shall be in default under this Agreement if, within the applicable cure period, the Party to whom the notice was given begins performance and thereafter diligently and continuously pursues performance until the alleged failure has been cured. Notwithstanding the foregoing, however, a Party shall be in default of its obligation to make any payment required under this Agreement if such payment is not made within twenty (20) business days after it is due.

10.2 Remedies. As compensation for the other party's default, an aggrieved Party is limited to seeking specific performance of the other party's obligations under this Agreement.

10.3 Performance Window; Election to Terminate. In the event a Developer does not deliver a request on or before December 31, 2028 that the City issue the initial series of PID Bonds, and Tellus and Owner have not delivered notice of an assignment of Tellus' rights and obligations under this Agreement in accordance with Section 11.1 within 60 days prior to such date, none of the Parties hereto shall thereafter be required to perform under this Agreement and this Agreement will terminate. If this Agreement is terminated under this Section 10.3, if a PID has been created, the owner of the applicable Property must within thirty (30) days of such termination file or caused to be filed with the City an irrevocable petition by the owners of the applicable Property to dissolve the PID and shall thereafter promptly undertake any and all reasonable and necessary actions to facilitate the dissolution of the PID. Notwithstanding any provision of this Agreement, the obligations of any owner of Property regarding the dissolution of the PID in accordance with this

Section 10.3 shall survive the termination of this Agreement.

SECTION 11
ASSIGNMENT; ENCUMBRANCE

11.1 Assignment. This Agreement shall be binding upon and inure to the benefit of the successors and assigns of the Parties hereto. The obligations, requirements, or covenants to develop the Property subject to this Agreement shall be assignable, in whole or in part, by Owner (with respect to any portion of the Property owned by Owner) or Tellus (with respect to any portion of the Property owned by Tellus), with the prior written consent of the City. The City's consent to such assignment shall not be unreasonably shall not be unreasonably withheld, conditioned, or delayed. Under no circumstances shall any part of this Agreement be assigned to an Institutional Investor. Notwithstanding the foregoing, the Owner (with respect to any portion of the Property owned by Owner) or Tellus has the right (with respect to any portion of the Property owned by Tellus) from time to time, without the consent of but with written notice to the City, to assign this Agreement in whole or in part to (i) any person or entity that is or will become an owner of any portion of the Property, to the extent of such assignee's ownership of the Property (or portion thereof), (ii) any entity formed in which the Owner or Tellus or any principal of the Owner or Tellus retains an ownership interest of at least fifty-one percent (51%), any subsidiary of the Owner or Tellus, or any entity that is under common control with or controlled by the Owner or Tellus, or (iii) any lien holder on the Property. An assignee shall be considered a "Party" for the purposes of this Agreement. Each assignment shall be in writing executed by the Owner or Tellus, as applicable, and the assignee and shall obligate the assignee to be bound by this Agreement to the extent this Agreement applies or relates to the obligations, rights, title, or interests being assigned. No assignment by the Owner or Tellus shall release the Owner or Tellus, as applicable, from any liability that resulted from an act or omission by such Party that occurred prior to the effective date of the assignment unless the City approves the release in writing. The Owner and Tellus shall maintain written records of all assignments made by the Owner or Tellus, respectively, to assignees, including a copy of each executed assignment and, upon written request from any Party or assignee, shall provide a copy of such records to the requesting person or entity, and this obligation shall survive the assigning Party's sale, assignment, transfer, or other conveyance of any interest in this Agreement or the Property.

11.2 Assignees as Parties. An Assignee authorized in accordance with this Agreement and for which notice of assignment has been provided in accordance herewith shall be considered a "Party" for the purposes of this Agreement. With the exception of: (a) the City, (b) an End User, (c) a purchaser of a Fully Developed and Improved Lot, and (d) the Owner (which shall have the obligations described herein), any person or entity upon becoming an owner of land within the PID or upon obtaining an ownership interest in any part of the Property shall be deemed to be a "Developer" and have all of the rights and obligations of a Developer with respect to such part of the Property as set forth in this Agreement and all related documents to the extent of said ownership or ownership interest.

11.3 Third Party Beneficiaries. Except as otherwise provided herein, this Agreement inures to the benefit of, and may only be enforced by, the Parties. No other person or entity shall have any right, title, or interest under this Agreement or otherwise be deemed to be a third-party beneficiary of this Agreement.

11.4 Notice of Assignment. Subject to Section 11.1 of this Agreement, the following requirements shall apply in the event that the Owner sells, assigns, transfers, or otherwise conveys the Property or any part thereof and/or any of its rights or benefits under this Agreement: (i) the Owner must provide written notice to the City to the extent required under Section 11.1; (ii) said notice must describe the extent to which any rights or benefits under this Agreement will be sold, assigned, transferred, or otherwise conveyed; (iii) said notice must state the name, mailing address, telephone contact information, and, if known, email address, of the person(s) that will acquire any rights or benefits as a result of any such sale, assignment, transfer or other conveyance; and (iv) said notice must be signed by a duly authorized person representing the applicable Owner and a duly authorized representative of the person that will acquire any rights or benefits as a result of the sale, assignment, transfer or other conveyance.

SECTION 12
GENERAL PROVISIONS

12.1 Recitals. The recitals contained in this Agreement: (a) are true and correct as of the Effective Date; (b) form the basis upon which the Parties negotiated and entered into this Agreement; (c) reflect the final intent of the Parties with regard to the subject matter of this Agreement; and (d) are fully incorporated into this Agreement for all purposes. In the event it becomes necessary to interpret any provision of this Agreement, the intent of the Parties, as evidenced by the recitals, shall be taken into consideration and, to the maximum extent possible, given full effect. The Parties have relied upon the recitals as part of the consideration for entering into this Agreement and, but for the intent of the Parties reflected by the recitals, would not have entered into this Agreement.

12.2 Acknowledgments. In negotiating and entering into this Agreement, the Parties respectively acknowledge and understand that:

(a) The Developers' obligations hereunder are primarily for the benefit of the Property;

(b) the improvements to be constructed and the open space dedications and donations of real property that the Developers are obligated to set aside and/or dedicate under this Agreement will benefit the Project by positively contributing to the enhanced nature thereof, increasing property values within the Project, and encouraging investment in and the ultimate development of the Project;

(c) the Developers' consent and acceptance of this Agreement is not an exaction or a concession demanded by the City, but is an undertaking of Developers' voluntary design to ensure consistency, quality, and adequate public improvements that will benefit the Property;

(d) the Public Infrastructure will benefit the City and promote state and local economic development, stimulate business and commercial activity in the City for the development and diversification of the economy of the state, promote the development and expansion of commerce in the state, and reduce unemployment or underemployment in the state;

(e) nothing contained in this Agreement shall be construed as creating or intended to create a contractual obligation that controls, waives, or supplants the City Council's legislative discretion or functions with respect to any matters not specifically addressed in this Agreement; and

(f) this Agreement is a development agreement under Section 212.172, Texas Local Government Code.

12.3 Binding Obligations. This Agreement and all amendments thereto and assignments hereof shall be recorded in the Real Property Records. This Agreement binds and constitutes a covenant running with the Property and, upon the Effective Date, is binding upon the Owner, Tellus and the City, and forms a part of any other requirements for development within the Property. This Agreement, when recorded, shall be binding upon the Parties and their successors and assigns as permitted by this Agreement and upon the Property; however, this Agreement shall not be binding upon, and shall not constitute any encumbrance to title as to, any End User of a Fully Developed and Improved Lot except for land use and development regulations that apply to such Fully Developed and Improved Lot.

12.4 Complete Agreement. This Agreement embodies the entire Agreement between the Parties and cannot be varied or terminated except as set forth in this Agreement, or by written agreement of the Parties expressly amending the terms of this Agreement.

12.5 Consideration. This Agreement is executed by the Parties hereto without coercion or duress and for substantial consideration, the sufficiency of which is hereby acknowledged.

12.6 Term. Unless otherwise extended by mutual agreement of the Parties, the term of this Agreement shall be until the later of (i) thirty (30) years from the Effective Date or (ii) the final maturity of PID Bonds sold in accordance with this Agreement (the "Original Term"). Upon expiration of the Original Term, the City shall have no obligations under this Agreement with the exception of maintaining and operating the PID in accordance with the SAP and the Indenture, and the Developers' obligations shall terminate.

12.7 INDEMNIFICATION AND HOLD HARMLESS. TELLUS AND THE OWNER, RESPECTIVELY, INCLUDING THEIR RESPECTIVE SUCCESSORS AND ASSIGNS, HEREBY COVENANT AND AGREE TO RELEASE, DEFEND, HOLD HARMLESS, AND INDEMNIFY THE CITY AND ITS OFFICIALS, OFFICERS, AGENTS, REPRESENTATIVES, SERVANTS AND EMPLOYEES (COLLECTIVELY, THE "RELEASED PARTIES"), FROM AND AGAINST ALL THIRD-PARTY CLAIMS, SUITS, JUDGMENTS, DAMAGES, AND DEMANDS AGAINST THE CITY OR ANY OF THE RELEASED PARTIES, WHETHER REAL OR ASSERTED INCLUDING WITHOUT LIMITATION REASONABLE ATTORNEY'S FEES, RELATED EXPENSES, EXPERT WITNESS FEES, CONSULTANT FEES, AND OTHER COSTS, ARISING OUT OF THE NEGLIGENCE OR OTHER WRONGFUL CONDUCT OF TELLUS OR OWNER, INCLUDING THE NEGLIGENCE OF ITS RESPECTIVE EMPLOYEES, CONTRACTORS, SUBCONTRACTORS, MATERIAL MEN, AND/OR AGENTS, IN CONNECTION WITH THE DESIGN OR CONSTRUCTION OF ANY PUBLIC INFRASTRUCTURE, STRUCTURES, OR OTHER FACILITIES OR IMPROVEMENTS THAT ARE REQUIRED OR PERMITTED UNDER THIS AGREEMENT

(TOGETHER, "CLAIMS"); PROVIDED THAT SUCH INDEMNIFICATION SHALL BE SEVERAL AND PROVIDED BY THE OWNER AND TELLUS SOLELY FOR THE RESPECTIVE PUBLIC INFRASTRUCTURE INSTALLED BY EACH AND IN NO EVENT SHALL THE OWNER BE REQUIRED TO INDEMNIFY TELLUS FOR CLAIMS MADE UNDER THIS AGREEMENT; **AND IT IS EXPRESSLY UNDERSTOOD THAT SUCH CLAIMS SHALL, EXCEPT AS MODIFIED BELOW, INCLUDE CLAIMS EVEN IF CAUSED BY THE CITY'S OWN CONCURRENT NEGLIGENCE SUBJECT TO THE TERMS OF THIS SECTION. TELLUS AND OWNER SHALL NOT, HOWEVER, BE REQUIRED TO INDEMNIFY THE CITY AGAINST CLAIMS CAUSED BY THE CITY'S SOLE NEGLIGENCE, GROSS NEGLIGENCE OR WILLFUL MISCONDUCT.** IF THE CITY INCURS CLAIMS THAT ARE CAUSED BY THE CONCURRENT NEGLIGENCE OF TELLUS OR OWNER, AS APPLICABLE, AND THE CITY, TELLUS' OR OWNER'S RESPECTIVE INDEMNITY OBLIGATION WILL BE LIMITED TO A FRACTION OF THE TOTAL CLAIMS EQUIVALENT TO TELLUS' OR OWNER'S, AS APPLICABLE, OWN PERCENTAGE OF RESPONSIBILITY. TELLUS AND OWNER, RESPECTIVELY, INCLUDING THEIR RESPECTIVE SUCCESSORS AND ASSIGNS, FURTHER COVENANT AND AGREE TO RELEASE, DEFEND, HOLD HARMLESS, AND INDEMNIFY, THE CITY AGAINST ANY AND ALL CLAIMS BY ANY PERSON CLAIMING AN OWNERSHIP INTEREST IN THE PROPERTY OWNED BY THE OWNER OR TELLUS , AS APPLICABLE, PRIOR TO THE EFFECTIVE DATE WHO HAS NOT SIGNED THIS AGREEMENT IF SUCH CLAIMS RELATE IN ANY MANNER OR ARISE IN CONNECTION WITH: (1) THE CITY'S RELIANCE UPON TELLUS' OR OWNER'S RESPECTIVE REPRESENTATIONS IN THIS AGREEMENT; (2) THIS AGREEMENT OR OWNERSHIP OF THE PROPERTY; OR (3) THE CITY'S APPROVAL OF ANY TYPE OF DEVELOPMENT APPLICATION OR SUBMISSION WITH RESPECT TO THE PROPERTY; PROVIDED THAT THE INDEMNITY PROVIDED BY THE OWNER OR TELLUS WITH RESPECT TO SUCH CLAIMS SHALL SOLELY BE FOR THEIR RESPCTIVE PORTIONS OF THE PROPERTY.

12.8 Status of Parties. At no time shall the City have any control over or charge/supervision of Tellus' or Owner's design, construction, installation or other work related to any of the Public Infrastructure, nor the means, methods, techniques, sequences, or procedures utilized for said design, construction, installation or other work. This Agreement does not create a joint enterprise or venture or employment relationship between the City, the Owner and Tellus.

12.9 Payee Information. With respect to any and every type of payment/remittance due to be paid at any time by the City to a Party hereto after the Effective Date under this Agreement, the name and delivery address of the payee for such payment shall be the notice address applicable to such party set forth in Section 12.10. Any Party to receive such payments/remittance may change the name of the payee and/or address by delivering written notice to the City designating a new payee and/or address or through an assignment of such Party's rights hereunder.

12.10 Notices. Any notice, submittal, payment or instrument required or permitted by this Agreement to be given or delivered to any party shall be deemed to have been received (i) if delivered via a method other than e-mail, when delivered personally or upon the expiration of 72 hours following deposit of the same in any United States Post Office, registered or certified mail, postage prepaid or (ii) if delivered via e-mail, upon the earlier of receipt of a "delivery receipt" or on the next Business Day after being sent (as recorded on the device from which the

sender sent the email) unless the sender receives an automated message that the email has not been delivered. Any such notice shall be addressed as follows:

To the City:	City of Anna, Texas Attn: City Manager 120 W. 7th Street Anna, Texas 75409 E-mail: rhenderson@annatexas.gov
With a copy to:	Wolfe, Tidwell & McCoy, LLP Attn: Clark McCoy 2591 Dallas Parkway, Suite 300 Frisco, Texas 75034 E-mail: cmccoy@wtmlaw.net
And to:	McCall, Parkhurst & Horton L.L.P. Attn: Rodolfo Segura Jr 717 North Harwood, Suite 900 Dallas, Texas 75201 E-mail: rsegura@mphlegal.com
To Tellus:	Tellus Texas III, LLC Attn: Andre Ferrari 5301 Headquarters Dr., Suite 120 Plano, Texas 75024 E-mail: aferrari@tellusgroupllc.com
With copies to:	Locke Lord Attn: Drew Slone 2200 Ross Ave., Suite 2800 Dallas, Texas 75201 E-mail: dslone@lockelord.com Brad Holdbrook Haynes and Boone 2801 N. Harwood Street, Suite 2300 Dallas, TX 75201 E-mail: brad.holdbrook@haynesboone.com Chris Simek 5301 Headquarters Dr., Suite 120 Plano, Texas 75024 E-mail: csimek@tellusgroupllc.com

To Owner:	Sherley Farms, LP Attn: Tasha Escoto P.O. Box 6069 McKinney, Texas 75071 E-mail: tasha@sherleypartnersltd.com
With a copy to:	Tobin Swope Winstead PC 2728 N. Harwood, Suite 500 Dallas, Texas 75201 E-mail: tswope@winstead.com

Any Party may change its address or addresses for delivery of notice by delivering written notice of such change of address to the other Party.

12.11 Estoppel Certificates. From time to time, upon written request of a Developer or Owner under this Agreement, and upon the payment to the City of a $100.00 fee plus all reasonable costs incurred by the City in providing the certificate described in this section, the City Manager, or his/her designee will, in his/her official capacity and to his/her reasonable knowledge and belief, execute a written estoppel certificate identifying any obligations of the respective Owner under this Agreement that are in default.

12.12 Interpretation. Each Party has been actively involved in negotiating and drafting this Agreement. Accordingly, a rule of construction that any ambiguities are to be resolved against the drafting Party will not apply to interpreting this Agreement. In the event of any dispute over the meaning or application of any provision of this Agreement, the provision will be interpreted fairly and reasonably and neither more strongly for nor against any Party, regardless of which Party originally drafted the provision.

12.13 Time. In this Agreement, time is of the essence and compliance with the times for performance herein is required.

12.14 Authority and Enforceability. The City represents and warrants that this Agreement has been approved by official action by the City Council of the City in accordance with all applicable public notice requirements (including, but not limited to, notices required by the Texas Open Meetings Act) and that the individual executing this Agreement on behalf of the City has been duly authorized to do so. The Owner and Tellus respectively represent and warrant that this Agreement has been approved by appropriate action of the Owner and Tellus, respectively, and that each individual executing this Agreement on behalf of the Owner or Tellus has been duly authorized to do so. Each Party respectively acknowledges and agrees that this Agreement is binding upon such Party and is enforceable against such Party, in accordance with its terms and conditions.

12.15 Limited Waiver of Immunity. The Parties are entering into this Agreement in reliance upon its enforceability. Consequently, the City unconditionally and irrevocably waives all claims of sovereign and governmental immunity which it may have (including, but not limited to, immunity from suit and immunity to liability) to the extent, but only to the extent, that a waiver is

necessary to enforce specific performance of this Agreement (including all of the remedies provided under this Agreement) and to give full effect to the intent of the Parties under this Agreement. Notwithstanding the foregoing, the waiver contained herein shall not waive any immunities that the City may have with respect to claims of injury to persons or property, which claims shall be subject to all of their respective immunities and to the provisions of the Texas Tort Claims Act. Further, the waiver of immunity herein is not enforceable by any party not a Party to this Agreement.

12.16 Amendment; Severability. This Agreement shall not be modified or amended except in writing signed by the Parties; provided that any amendment relating to a distinct portion of the Property may be signed solely by the owner of such Property and the City without the requirement of signatures from any other Party hereto and the remaining Parties hereto consent to such amendment. If any provision of this Agreement is determined by a court of competent jurisdiction to be unenforceable for any reason, then: (a) such unenforceable provision shall be deleted from this Agreement; (b) the unenforceable provision shall, to the extent possible and upon mutual agreement of the Parties, be rewritten to be enforceable and to give effect to the intent of the Parties; and (c) the remainder of this Agreement shall remain in full force and effect and shall be interpreted to give effect to the intent of the Parties.

12.17 Applicable Law; Venue. This Agreement is entered into pursuant to and is to be construed and enforced in accordance with the laws of the State of Texas and all obligations of the Parties are performable in Collin County. Exclusive venue for any action related to, arising out of, or brought in connection with this Agreement shall be in a state district court in Collin County.

12.18 Non Waiver. Any failure by a Party to insist upon performance by the other Party of any material provision of this Agreement shall not be deemed a waiver thereof, and the Party shall have the right at any time thereafter to insist upon strict performance of any and all provisions of this Agreement. No provision of this Agreement may be waived except by writing signed by the Party waiving such provision. Any waiver shall be limited to the specific purposes for which it is given. No waiver by any Party of any term or condition of this Agreement shall be deemed or construed to be a waiver of any other term or condition or subsequent waiver of the same term or condition.

12.19 Force Majeure. Each Party shall use good faith, due diligence and reasonable care in the performance of its respective obligations under this Agreement, and time shall be of the essence in such performance; however, in the event a Party is unable, due to force majeure, to perform its obligations under this Agreement, then the obligations affected by the force majeure shall be temporarily suspended. Within ten (10) business days after the occurrence of a force majeure, the Party claiming the right to temporarily suspend its performance, shall give written notice to all the Parties, including a detailed explanation of the force majeure and a description of the action that will be taken to remedy the force majeure and resume full performance at the earliest possible time. The term "force majeure" shall include events or circumstances that are not within the reasonable control of the Party whose performance is suspended and that could not have been avoided by such Party with the good faith exercise of good faith, due diligence and reasonable care. A Party that has claimed the right to temporarily suspend its performance under this section shall provide written reports to the other Party at least once every week detailing: (i) the extent to which the force majeure event or circumstance continues to prevent the Party's performance; (ii)

all of the measures being employed to regain the ability to fully perform; and (iii) the projected date upon which the Party will be able to resume full performance.

12.20 Statutory Verifications. Each of the Owner and Tellus (each, a "Representing Party") makes the following representations and covenants pursuant to Chapters 2252, 2271, 2274, and 2276, Texas Government Code, as heretofore amended (the "Government Code"), in entering into this Agreement. As used in such verifications, "affiliate" means an entity that controls, is controlled by, or is under common control with the Representing Party within the meaning of SEC Rule 405, 17 C.F.R. § 230.405, and exists to make a profit. Liability for breach of any such verification during the term of this Agreement shall survive until barred by the applicable statute of limitations, and shall not be liquidated or otherwise limited by any provision of this Agreement, notwithstanding anything in this Agreement to the contrary.

a. Not a Sanctioned Company. Each Representing Party respectively represents that neither it nor any of its parent company, wholly- or majority-owned subsidiaries, and other affiliates is a company identified on a list prepared and maintained by the Texas Comptroller of Public Accounts under Section 2252.153 or Section 2270.0201, Government Code. The foregoing representation excludes any Representing Party and each of its parent company, wholly- or majority-owned subsidiaries, and other affiliates, if any, that the United States government has affirmatively declared to be excluded from its federal sanctions regime relating to Sudan or Iran or any federal sanctions regime relating to a foreign terrorist organization.

b. No Boycott of Israel. Each Representing Party respectively hereby verifies that it and its parent company, wholly- or majority-owned subsidiaries, and other affiliates, if any, do not boycott Israel and will not boycott Israel during the term of this Agreement. As used in the foregoing verification, "boycott Israel" has the meaning provided in Section 2271.001, Government Code.

c. No Discrimination Against Firearm Entities. Each Representing Party respectively hereby verifies that it and its parent company, wholly- or majority-owned subsidiaries, and other affiliates, if any, do not have a practice, policy, guidance, or directive that discriminates against a firearm entity or firearm trade association and will not discriminate against a firearm entity or firearm trade association during the term of this Agreement. As used in the foregoing verification, "discriminate against a firearm entity or firearm trade association" has the meaning provided in Section 2274.001(3), Government Code.

d. No Boycott of Energy Companies. Each Representing Party respectively hereby verifies that it and its parent company, wholly- or majority-owned subsidiaries, and other affiliates, if any, do not boycott energy companies and will not boycott energy companies during the term of this Agreement. As used in the foregoing verification, "boycott energy companies" has the meaning provided in Section 2276.001(1), Government Code.

12.21 Form 1295. Submitted herewith is a completed Form 1295 in connection with the participation of the Owner and Tellus to the extent each constitutes a "business entity" for the

purposes of Section 2252.908 of the Texas Government Code in the execution of this Agreement generated by the Texas Ethics Commission's (the "TEC") electronic filing application in accordance with the provisions of Section 2252.908 of the Texas Government Code and the rules promulgated by the TEC (the "Form 1295"). The City hereby confirms receipt of the Form 1295 from the Owner and Tellus to the extent that each constitutes a "business entity" for the purposes of Section 2252.908 of the Texas Government Code, and the City agrees to acknowledge such form with the TEC through its electronic filing application not later than the 30th day after the receipt of such form. The Owner, Tellus and the City understand and agree that, with the exception of information identifying the City and the contract identification number, neither the City nor its consultants are responsible for the information contained in the Form 1295; that the information contained in the Form 1295 has been provided solely by the Owner and Tellus; and, neither the City nor its consultants have verified such information.

12.22 Counterparts. This Agreement may be executed in any number of counterparts, each of which shall be deemed an original and constitute one and the same instrument.

12.23 Exhibits. The following exhibits are attached to this Agreement and are incorporated herein for all purposes:

Exhibit A	Metes and Bounds Description of the Property
Exhibit B	Depiction of the Property
Exhibit C	Illustrative Layout
Exhibit D	Development Standards
Exhibit E	Authorized Improvements and Budgeted Costs
Exhibit F-1	Major Sewer Improvements
Exhibit F-2	City Constructed Sewer Improvements
Exhibit F-3	Sewer Improvements Schedule
Exhibit G	Major Water Improvements
Exhibit H	Major Roadway Improvements
Exhibit H-1	Proposed Thoroughfare Plan Revision
Exhibit I	Conceptual Amenity Depictions
Exhibit J	Trail and Open Space Improvements
Exhibit K	PID Bonds Financial Summary

[SIGNATURES PAGES AND EXHIBITS FOLLOW]

EXECUTED BY THE PARTIES TO BE EFFECTIVE ON THE EFFECTIVE DATE:

CITY OF ANNA, TEXAS

By: _____
Name: Pete Cain
Title: Mayor
Date: 12/17/24

STATE OF TEXAS §
COUNTY OF COLLIN §

This instrument was acknowledged before me on this 17 day of December 2024, by Pete Cain, Mayor of the City of Anna, Texas, on behalf of said City.

CARRIE L. LAND
Notary Public, State of Texas
Comm. Expires 02-04-2027
Notary ID 11419404

_____
Notary Public, State of Texas

[SEAL]

Approved as to form:

_____
Clark McCoy, City Attorney

OWNER:

SHERLEY PARTNERS, LTD.,
a Texas limited partnership

By: TT Sherley LLC,
a Texas limited liability company, its
General Partner

By: _____
Tasha Escoto, its manager

STATE OF TEXAS §
COUNTY OF Collin §

This instrument was acknowledged before me, on this 11 day of December, 2024, by Tasha Escoto, in her capacity as manager of TT Sherley LLC, a Texas limited liability company in its capacity as general partner of Sherley Partners, Ltd., on behalf of said limited partnership.

[S E A L]

_____
Notary Public, State of Texas

STACEY CAMPOS
Notary Public, State of Texas
Comm. Expires 03-27-2027
Notary ID 134273061

TELLUS:

TELLUS TEXAS III, LLC,
a Texas limited liability company

By: Tellus-Anna, LLC, a Texas limited liability company and manager of Tellus Texas III, LLC

By: _____
David Blom, Manager

STATE OF TEXAS §
COUNTY OF Collin §

This instrument was acknowledged before me, on the this 12 day of December, 2024, by David Blom, manager of Tellus-Anna, LLC, in its capacity as manger of Tellus Texas III, LLC, on behalf of said limited liability company.

[S E A L]

COURTNEY L. DUNCAN
Notary Public, State of Texas
Comm. Expires 01-24-2027
Notary ID 134162993

_____
Notary Public, State of Texas

Exhibit A

Metes and Bounds Description of the Property

SHERLEY FARMS SOUTH TRACT
LEGAL DESCRIPTION
970.482 ACRES

BEING a tract of land situated in the G. Morrison Survey, Abstract No. 559, the S. Moore Survey, Abstract No. 625, and the J. Fisher Survey, Abstract No. 305, in Collin County, Texas, being part of Tracts 1.1, 1.2, 1.3, 1.4, all of Tract 1.6, recorded in Volume 4466, Page 153, Deed Records, Collin County, Texas (DRCCT), and part of Tracts 1.1, 1.2, 1.3, and 1.4, recorded in Volume 4466, Page 183 DRCCT, and all of Tract 1.2, recorded in Volume 4466, Page 201 DRCCT, with the subject tract being more particularly described as follows:

BEGINNING at a 1/2" iron rod found on the north line of Farm to Market Road 455, a variable width public right-of-way, for the southeast corner of a tract conveyed to Timothy P. Adams and Patricia S. Adams, recorded in Document No. 20170117000070510, Official Public Records, Collin County, Texas (OPRCCT);

THENCE N 00°40'51" E, along the east line of said Adams tract, passing at 19.16 feet a 5/8" iron rod with plastic cap found for witness, continuing a total distance of 321.14 feet to a 1/2" iron rod found;

THENCE N 01°18'15" E, 307.48 feet continuing along the east line thereof to a 1/2" iron rod with plastic cap found for the southeast corner of a tract conveyed to Wilcox Anna Properties, LLC, recorded in Document No. 20090225000210920 OPRCCT;

THENCE N 01°02'30" E, 904.66 feet along the east line thereof, and of an east line of a tract conveyed to City of Anna recorded in Volume 5961, Page 7136 DRCCT, to a 1/2" iron rod with plastic cap stamped "SPIARSENG" set for the southeast corner of "The Town Farm" First Tract, conveyed to MJLA Adams, Ltd., recorded in Document No. 20110505000462590 OPRCCT;

THENCE N 00°56'20" E, 1597.53 feet along the east line of said MJLA Adams tract to a 1/2" iron rod with plastic cap stamped "SPIARSENG" set for the northeast corner thereof;

THENCE N 87°10'06" W, 281.88 feet along the north line of said MJLA Adams tract to a 3/8" iron rod found for the southeast corner of a tract conveyed to Equity Trust Company Custodian FBO Raj Kakarlapudi IRA and NKS Estates, LLC, recorded in Document No. 20210628001299290 OPRCCT;

THENCE N 02°29'42" E, 2152.51 feet along the east line thereof to a 3/8" iron rod found on the east line of Farm to Market Road 2862, a 90-foot-wide public right-of-way;

THENCE along the east line thereof, around a non-tangent curve to the left having a central angle of 20°03'34", a radius of 363.31 feet, a chord of N 12°39'47" E - 126.55 feet, an arc length of 127.20 feet;

THENCE N 02°38'00" E, 324.15 feet continuing along the east line of said right-of-way to a 1/2" iron rod with plastic cap found for the southwest corner of a tract conveyed to Anna Independent School District, recorded in Volume 5816, Page 2962 DRCCT;

THENCE S 88°36'00" E, 946.63 feet along the south line thereof;

THENCE N 01°24'00" E, 946.63 feet along the east line of said Anna ISD tract to the intersection thereof with the south line of Farm to Market Road 2862;

THENCE along the south line thereof, the following:

S 88°36'00" E, 1840.60 feet;

S 87°35'00" E, 950.82 feet;

S 87°54'00" E, 852.06 feet;

S 88°23'00" E, 1005.18 feet;

And a tangent curve to the left having a central angle of 61°39'58", a radius of 363.31 feet, a chord of N 60°47'01" E - 372.42 feet, an arc length of 391.02 feet to a 1/2" iron rod with plastic cap stamped "SPIARSENG" set for a westerly corner of a tract conveyed to Larry Kropman Bennett and Jill Rae Bennett, recorded in Volume 1718, Page 193 DRCCT, and from which a 5/8" iron rod with plastic cap found bears N 17°37'19" E, 154.65 feet (a chord bearing and distance);

THENCE S 02°42'15" W, 147.06 feet along the west line of said Bennett tract to a 1/2" iron rod with plastic cap stamped "SPIARSENG" set;

THENCE S 88°34'52" E, along the south line of said Bennett tract, passing at 317.47 feet a 3/8" iron rod found for the southwest corner of a tract conveyed to the Nagamanohar Javvaji and Chaya Javvaji Living Trust, recorded in Document No. 20160209000150410 OPRCCT, continuing a total distance of 1164.17 feet to a 1/2" iron rod found for the southeast corner thereof;

THENCE N 01°54'20" W, 404.61 feet along the east line thereof to a 1/2" iron rod with plastic cap found for the southwest corner of a tract conveyed to Jacob Knettel and Alexandra T. Knettel, recorded in Document No. 20160902001176800 OPRCCT;

THENCE N 88°51'58" E, 711.14 feet along the south line thereof to a 1/2" iron rod with plastic cap found for the upper southwest corner of a tract conveyed to Bobby R. Beall and Mary Reloa Beall, Trustees of the Beall Family Living Trust, recorded in Volume 5842, Page 1374 DRCCT;

THENCE N 89°53'22" E, 543.59 feet along the upper south line thereof to a fence post found;

THENCE S 00°43'46" W, 1256.27 feet along a westerly line of said Beall tract to a 1/2" iron rod found for a northwesterly corner of a tract conveyed to JDI Investors, LP, recorded in Document No. 20141016001133750 OPRCCT;

THENCE S 00°27'02" W, 1121.81 feet, generally along a fence and along a westerly line of said JDI tract to a fence post found;

THENCE N 89°10'40" W, 1167.05 feet, generally along a fence and along a southerly line of said JDI tract to a fence post found;

THENCE S 00°10'31" E, 1608.22 feet, generally along a fence and along a westerly line of said JDI tract to a 1/2" iron rod found for the northeast corner of a tract conveyed to WKG Enterprises, Ltd., recorded in Volume 4478, Page 2546 DRCCT;

THENCE N 88°26'32" W, 1013.41 feet along the north line thereof to a 1/2" iron rod found for the northeast corner of a tract conveyed to Miles and Bobbi Martin, recorded in Document No. 20220331000521330 OPRCCT;

THENCE N 88°01'21" W, 524.66 feet along the north line thereof to a 1/2" iron rod with plastic cap stamped "SPIARSENG" set;

THENCE N 87°54'42" W, continuing along the north line of said Martin tract, passing at 261.79 feet a 3/4" iron pipe found for the northeast corner of a tract conveyed to Zen Assets LLC, recorded in Document No. 2022000142528 OPRCCT, and continuing along the north line thereof a total distance of 523.20 feet to a 1/2" iron rod with plastic cap stamped "SPIARSENG" set;

THENCE S 00°57'28" W, 2078.20 feet along the west line thereof to a 1/2" iron rod found for the southwest corner of said Zen Assets tract, being a bend point in County Road 424, a public road;

THENCE S 00°31'42" E, 913.32 feet along said road to a 60d nail found for a bend point thereof;

THENCE N 88°34'43" W, 435.86 feet continuing along said road to a point for the intersection of County Road 424 with the north line of Farm to Market Road 455;

THENCE along the north line of said right-of-way, the following:

N 00°51'24" E, 46.08 feet to a wood highway monument;

N 89°08'36" W, 1080.65 feet to a wood highway monument;

A tangent curve to the left having a central angle of 03°40'00", a radius of 5774.58 feet, a chord of S 89°01'24" W - 369.48 feet, an arc length of 369.55 feet to a 1/2" iron rod with plastic cap stamped "SPIARSENG" set;

N 02°48'36" W, 5.00 feet to a 1/2" iron rod with plastic cap stamped "SPIARSENG" set;

S 87°11'24" W, 1677.79 feet to a 1/2" iron rod with plastic cap stamped "SPIARSENG" set;

S 88°35'24" W, 857.61 feet to a 1/2" iron rod with plastic cap stamped "SPIARSENG" set;

S 87°45'48" W, 346.50 feet to a 1/2" iron rod with plastic cap stamped "SPIARSENG" set;

And S 88°35'24" W, 209.16 feet to the POINT OF BEGINNING with the subject tract containing 42,274,206 square feet or 970.482 acres of land.

SHERLEY FARMS NORTH TRACT
LEGAL DESCRIPTION
153.110 ACRES

BEING a tract of land situated in the J. Farris Survey, Abstract No. 330, and the S. Moore Survey, Abstract No. 625, in Collin County, Texas, being part of Tract 1.7, recorded in Volume 4466, Page 153, Deed Records, Collin County, Texas (DRCCT), and part of Tracts 1.5 and 1.6, recorded in Volume 4466, Page 183 DRCCT, and all of Tract 1.1, recorded in Volume 4466, Page 201 DRCCT, with the subject tract being more particularly described as follows:

BEGINNING at a 1/2" iron rod with plastic cap stamped "SPIARSENG" set on the north line of Farm to Market Road 2862, a called 90-foot-wide right-of-way, for the southeast corner of the "First Tract" conveyed to Daniel W. Koen and Sue Ann Burleson-Koen, recorded in Document No. 93-0107055 DRCCT, from which a 1/2" iron rod found bears N 88°36'00" W, 1326.83 feet;

THENCE N 01°09'20" E, 958.23 feet along the common line thereof to a fence post found for a southwest corner of a tract conveyed to 3Mc Joint Venture, recorded in Volume 3670, Page 174 DRCCT;

THENCE along the common line thereof the following:

S 87°43'06" E, 1297.37 feet to a 1/2" iron rod with plastic cap stamped "SPIARSENG" set;

N 01°31'00" E, 90.36 feet to a point on the bank of a reservoir;

N 01°23'00" E, 892.67 feet to a point on the bank of a reservoir;

N 00°54'00" E, 297.22 feet to a 1/2" iron rod with plastic cap stamped "SPIARSENG" set;

And N 01°19'00" E, passing at 346.16 feet a 1/2" iron rod found for witness, being on the south line of County Road 427, a public road, continuing into said road a total distance of 363.52 feet to a point for corner;

THENCE S 88°36'15" E, 2111.97 feet along said road to a point for corner being the northwest corner of a tract conveyed to Tina Trimbur, recorded in Volume 5570, Page 1829 DRCCT;

THENCE S 01°46'06" W, 515.24 feet along the west line thereof to a 1/2" iron rod found for the northwest corner of a tract conveyed to Todd O'Brien Hannan and Kimberly Michele Hannan, co-trustees of the TKSL Tattoo Revocable Trust, recorded in Document No. 20210422000816440, Official Public Records, Collin County, Texas;

THENCE along the west line thereof, the following:

S 02°08'00" W, 125.96 feet to a 1/2" iron rod with plastic cap stamped "SPIARSENG" set;

S 01°43'00" W, 589.97 feet to a 1/2" iron rod with plastic cap stamped "SPIARSENG" set;

S 01°36'00" W, 319.63 feet to a 1/2" iron rod with plastic cap stamped "SPIARSENG" set;

And S 01°07'00" W, 163.58 feet to a 1/2" iron rod with plastic cap stamped "SPIARSENG" set on the north line of Farm to Market Road 2862, and from which a 1" iron rod found bears S 71°47'28" W, 1.15 feet;

THENCE along the north line of said Farm to Market Road, the following:

A non-tangent curve to the left having a central angle of 29°26'09", a radius of 363.31 feet, a chord of S 15°56'04" W - 184.61 feet, an arc length of 186.65 feet to a 1/2" iron rod with plastic cap stamped "SPIARSENG" set;

S 01°13'00" W, 446.03 feet to a 1/2" iron rod with plastic cap stamped "SPIARSENG" set;

A tangent curve to the right having a central angle of 90°24'00", a radius of 273.31 feet, a chord of S 46°25'00" W - 387.87 feet, an arc length of 431.22 feet to a 1/2" iron rod with plastic cap stamped "SPIARSENG" set;

N 88°23'00" W, 1004.80 feet to a 1/2" iron rod with plastic cap stamped "SPIARSENG" set;

N 87°54'00" W, 851.44 feet to a 1/2" iron rod with plastic cap stamped "SPIARSENG" set;

N 87°35'00" W, 951.37 feet to a 1/2" iron rod with plastic cap stamped "SPIARSENG" set;

And N 88°36'00" W, 266.77 feet to the POINT OF BEGINNING with the subject tract containing 6,669,493 square feet or 153.110 acres of land.

Exhibit B

Depiction of the Property

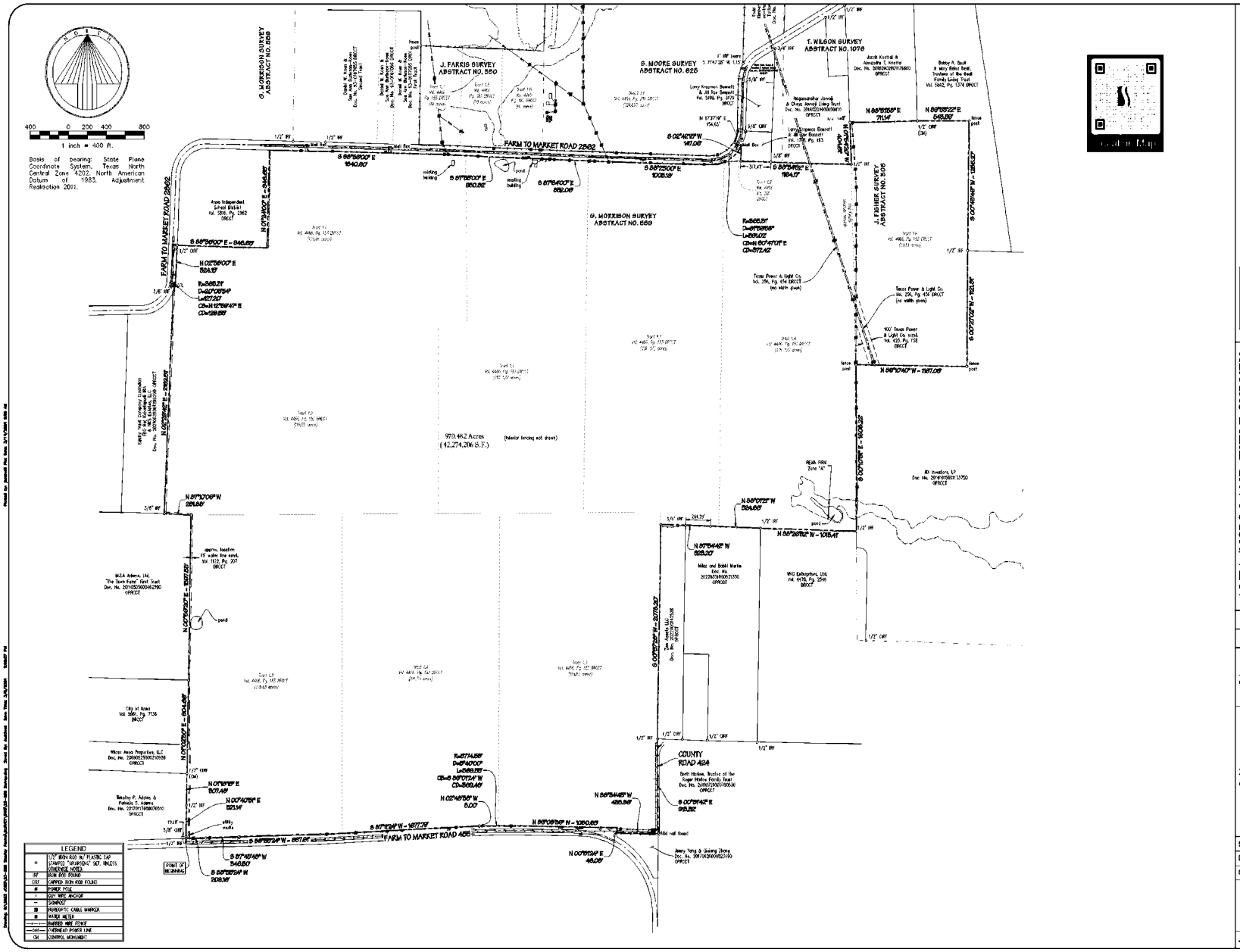

SPIARS ENGINEERING & SURVEYING
765 Custer Road, Suite 100 • Plano, TX 75075 • 972.422.0077
TBPELS No. F-2121 and No. F-10043100 • www.spiarseng.com

website

ALTA/NSPS LAND TITLE SURVEY

COLLIN COUNTY, TEXAS

Sherley Farms

Issue Dates: 1/29/24

Revisions | Date

Scale: 1" = 400'

Drawn By: ED

Checked By: DKB

Sheet 1 of 2

JOB # 23-288

METES AND BOUNDS DESCRIPTION

BEING a tract of land situated in the G. Morrison Survey, Abstract No. 559, the S. Moore Survey, Abstract No. 625, and the J. Fisher Survey, Abstract No. 305, in Collin County, Texas, being part of Tracts 1.1, 1.2, 1.3, 1.4, all of Tract 1.6, recorded in Volume 4466, Page 153, Deed Records, Collin County, Texas (DRCCT), and part of Tracts 1.1, 1.2, 1.3, and 1.4, recorded in Volume 4466, Page 183 DRCCT, and all of Tract 1.2, recorded in Volume 4466, Page 201 DRCCT, with the subject tract being more particularly described as follows:

BEGINNING at a 1/2" iron rod found on the north line of Farm to Market Road 455, a variable width public right-of-way, for the southeast corner of a tract conveyed to Timothy P. Adams and Patricia S. Adams, recorded in Document No. 20170117000070510, Official Public Records, Collin County, Texas (OPRCCT);

THENCE N 00°40'51" E, along the east line of said Adams tract, passing at 19.16 feet a 5/8" iron rod with plastic cap found for witness, continuing a total distance of 321.14 feet to a 1/2" iron rod found;

THENCE N 01°18'15" E, 307.48 feet continuing along the east line thereof to a 1/2" iron rod with plastic cap found for the southeast corner of a tract conveyed to Wilcox Anna Properties, LLC, recorded in Document No. 20090225000210920 OPRCCT;

THENCE N 01°02'30" E, 904.66 feet along the east line thereof, and of an east line of a tract conveyed to City of Anna recorded in Volume 5961, Page 7136 DRCCT, to a 1/2" iron rod with plastic cap stamped "SPIARSENG" set for the southeast corner of "The Town Farm" First Tract, conveyed to MJLA Adams, Ltd., recorded in Document No. 20110505000462590 OPRCCT;

THENCE N 00°56'20" E, 1597.53 feet along the east line of said MJLA Adams tract to a 1/2" iron rod with plastic cap stamped "SPIARSENG" set for the northeast corner thereof;

THENCE N 87°10'06" W, 281.88 feet along the north line of said MJLA Adams tract to a 3/8" iron rod found for the southeast corner of a tract conveyed to Equity Trust Company Custodian FBO Raj Kakarlapudi IRA and NKS Estates, LLC, recorded in Document No. 20210628001299290 OPRCCT;

THENCE N 02°29'42" E, 2152.51 feet along the east line thereof to a 3/8" iron rod found on the east line of Farm to Market Road 2862, a 90-foot-wide public right-of-way;

THENCE along the east line thereof, around a non-tangent curve to the left having a central angle of 20°03'34", a radius of 363.31 feet, a chord of N 12°39'47" E – 126.55 feet, an arc length of 127.20 feet;

THENCE N 02°38'00" E, 324.15 feet continuing along the east line of said right-of-way to a 1/2" iron rod with plastic cap found for the southwest corner of a tract conveyed to Anna Independent School District, recorded in Volume 5816, Page 2962 DRCCT;

THENCE S 88°36'00" E, 946.63 feet along the south line thereof;

THENCE N 01°24'00" E, 946.63 feet along the east line of said Anna ISD tract to the intersection thereof with the south line of Farm to Market Road 2862;

THENCE along the south line thereof, the following:

S 88°36'00" E, 1840.60 feet;

S 87°35'00" E, 950.82 feet;

S 87°54'00" E, 852.06 feet;

S 88°23'00" E, 1005.18 feet;

And a tangent curve to the left having a central angle of 61°39'58", a radius of 363.31 feet, a chord of N 60°47'01" E – 372.42 feet, an arc length of 391.02 feet to a 1/2" iron rod with plastic cap stamped "SPIARSENG" set for a westerly corner of a tract conveyed to Larry Kropman Bennett and Jill Rae Bennett, recorded in Volume 1718, Page 193 DRCCT, and from which a 5/8" iron rod with plastic cap found bears N 17°37'19" E, 154.65 feet (a chord bearing and distance);

THENCE S 02°42'15" W, 147.06 feet along the west line of said Bennett tract to a 1/2" iron rod with plastic cap stamped "SPIARSENG" set;

THENCE S 88°34'52" E, along the south line of said Bennett tract, passing at 317.47 feet a 3/8" iron rod found for the southwest corner of a tract conveyed to the Nagamanohar Javvaji and Chaya Javvaji Living Trust, recorded in Document No. 20160209000150410 OPRCCT, continuing a total distance of 1164.17 feet to a 1/2" iron rod found for the southeast corner thereof;

THENCE N 01°54'20" W, 404.61 feet along the east line thereof to a 1/2" iron rod with plastic cap found for the southwest corner of a tract conveyed to Jacob Knettel and Alexandra T. Knettel, recorded in Document No. 20160902001176800 OPRCCT;

THENCE N 88°51'58" E, 711.14 feet along the south line thereof to a 1/2" iron rod with plastic cap found for the upper southwest corner of a tract conveyed to Bobby R. Beall and Mary Reba Beall, Trustees of the Beall Family Living Trust, recorded in Volume 5842, Page 1374 DRCCT;

THENCE N 89°53'22" E, 543.59 feet along the upper south line thereof to a fence post found;

THENCE S 00°43'46" W, 1256.27 feet along a westerly line of said Beall tract to a 1/2" iron rod found for a northwesterly corner of a tract conveyed to JDI Investors, LP, recorded in Document No. 20141016001133750 OPRCCT;

THENCE S 00°27'02" W, 1121.81 feet, generally along a fence and along a westerly line of said JDI tract to a fence post found;

THENCE N 89°10'40" W, 1167.05 feet, generally along a fence and along a southerly line of said JDI tract to a fence post found;

THENCE S 00°10'31" E, 1608.22 feet, generally along a fence and along a westerly line of said JDI tract to a 1/2" iron rod found for the northeast corner of a tract conveyed to WKG Enterprises, Ltd., recorded in Volume 4478, Page 2546 DRCCT;

THENCE N 88°26'32" W, 1013.41 feet along the north line thereof to a 1/2" iron rod found for the northeast corner of a tract conveyed to Miles and Bobbi Martin, recorded in Document No. 20220331000521330 OPRCCT;

THENCE N 88°01'21" W, 524.66 feet along the north line thereof to a 1/2" iron rod with plastic cap stamped "SPIARSENG" set;

THENCE N 87°54'42" W, continuing along the north line of said Martin tract, passing at 261.79 feet a 3/4" iron pipe found for the northeast corner of a tract conveyed to Zen Assets LLC, recorded in Document No. 20220001142528 OPRCCT, and continuing along the north line thereof a total distance of 523.20 feet to a 1/2" iron rod with plastic cap stamped "SPIARSENG" set;

THENCE S 00°57'28" W, 2078.20 feet along the west line thereof to a 1/2" iron rod found for the southwest corner of said Zen Assets tract, being a bend point in County Road 424, a public road;

THENCE S 00°31'42" E, 913.32 feet along said road to a 60d nail found for a bend point thereof;

THENCE N 88°34'43" W, 435.86 feet continuing along said road to a point for the intersection of County Road 424 with the north line of Farm to Market Road 455;

THENCE along the north line of said right-of-way, the following:

N 00°51'24" E, 46.08 feet to a wood highway monument;

N 89°08'36" W, 1080.65 feet to a wood highway monument;

A tangent curve to the left having a central angle of 03°40'00", a radius of 5774.58 feet, a chord of S 89°01'24" W – 369.48 feet, on arc length of 369.55 feet to a 1/2" iron rod with plastic cap stamped "SPIARSENG" set;

N 02°48'36" W, 5.00 feet to a 1/2" iron rod with plastic cap stamped "SPIARSENG" set;

S 87°11'24" W, 1677.79 feet to a 1/2" iron rod with plastic cap stamped "SPIARSENG" set;

S 88°35'24" W, 857.61 feet to a 1/2" iron rod with plastic cap stamped "SPIARSENG" set;

S 87°45'48" W, 346.50 feet to a 1/2" iron rod with plastic cap stamped "SPIARSENG" set;

And S 88°35'24" W, 209.16 feet to the POINT OF BEGINNING with the subject tract containing 42,274,206 square feet or 970.482 acres of land.

SURVEY RELATED SCHEDULE "B" - EXCEPTIONS

First American Title Insurance Company G.F. No. 1002-391994-RTT Effective 12/08/2023

10(e)	Easement to Texas Power and Light Company, recorded in Volume 256, Page 454, Real Property Records, Collin County, Texas. AFFECTS AS SHOWN
10(f)	Easement to Texas Power and Light Company, recorded in Volume 256, Page 436, Real Property Records, Collin County, Texas. AFFECTS AS SHOWN
10(g)	Easement to Texas Power and Light Company, recorded in Volume 256, Page 453, Real Property Records, Collin County, Texas. DOES NOT AFFECT
10(h)	Easement to American Telephone and Telegraph Company, recorded in Volume 271, Page 584, Real Property Records, Collin County, Texas. AFFECTS; BLANKET IN NATURE
10(i)	Easement to Texas Power and Light Company, recorded in Volume 271, Page 573, Real Property Records, Collin County, Texas. AFFECTS; BLANKET IN NATURE
10(j)	Easement to Southwestern Bell Telephone Company, recorded in Volume 383, Page 444, Real Property Records, Collin County, Texas. AFFECTS; BLANKET IN NATURE
10(k)	Easement to Southwestern Bell Telephone Company, recorded in Volume 383, Page 443, Real Property Records, Collin County, Texas. AFFECTS; BLANKET IN NATURE
10(l)	Easement to Southwestern Bell Telephone Company, recorded in Volume 383, Page 451, Real Property Records, Collin County, Texas. AFFECTS; BLANKET IN NATURE
10(m)	Easement to Southwestern Bell Telephone Company, recorded in Volume 383, Page 469, Real Property Records, Collin County, Texas. AFFECTS; BLANKET IN NATURE
10(n)	Easement to the State of Texas, recorded in Volume 417, Page 155, Real Property Records, Collin County, Texas. DOES NOT AFFECT
10(o)	Easement to the State of Texas, recorded in Volume 417, Page 133, Real Property Records, Collin County, Texas. DOES NOT AFFECT
10(p)	Easement to the State of Texas, recorded in Volume 418, Page 257, Real Property Records, Collin County, Texas. DOES NOT AFFECT
10(q)	Easement to Texas Power and Light Company, recorded in Volume 423, Page 158, Real Property Records, Collin County, Texas. AFFECTS AS SHOWN
10(s)	Easement to Collin County Soil Conservation District, recorded in Volume 447, Page 220, Real Property Records, Collin County, Texas. DOES NOT AFFECT
10(u)	Easement to Collin County Soil Conservation District, recorded in Volume 551, Page 588, Real Property Records, Collin County, Texas. DOES NOT AFFECT
10(v)	Easement to the City of Anna, recorded in Volume 631, Page 54, Real Property Records, Collin County, Texas. NO DESCRIPTION THEREIN; UNABLE TO LOCATE
10(w)	Easement to the State of Texas, recorded in Volume 685, Page 543, Real Property Records, Collin County, Texas. DOES NOT AFFECT
10(x)	Easement to Grayson-Collin Electric Cooperative, recorded in Volume 813, Page 151, Real Property Records, Collin County, Texas. VAGUE, OUTDATED DESCRIPTION; UNABLE TO LOCATE
10(y)	Easement to South Grayson Water Supply Corp., recorded in Volume 1122, Page 207, Real Property Records, Collin County, Texas. AFFECTS AS SHOWN
10(z)	Easement to Westminster Special Utility District, recorded in cc# 20190531000619370, Real Property Records, Collin County, Texas. AFFECTS; UNABLE TO LOCATE

SURVEYOR'S CERTIFICATE

To: Sherley Partners, Ltd., Tellus Acquisitions LLC, First American Title Insurance Company, Republic Title of Texas, and their respective successors and assigns:

This is to certify that this map or plat and the survey on which it is based were made in accordance with the 2021 Minimum Standard Detail Requirements for ALTA/NSPS Land Title Surveys jointly established and adopted by ALTA and NSPS, and includes optional items 1, 2, 3, 4, 7(a), 8, 9, and 13 of Table A thereof. The field work was completed on 1/12/24.

Date of Plat or Map: 1/29/24

STATE OF TEXAS REGISTERED DARREN K. BROWN 5252 PROFESSIONAL LAND SURVEYOR

darren.brown@spiarsengineering.com

Darren K. Brown, RPLS 5252

Part of the subject land is located in a 100-year Flood Plain or in an identified "flood prone area," as defined pursuant to the Flood Disaster Protection Act of 1973, as amended, as reflected by Flood Insurance Rate Map Panel 48085C0160J, effective on 6/2/2009. The property is located in Zone "A" (No base flood elevations determined) and Zone "X" (areas determined to be outside the 500-year floodplain).

SPIARS ENGINEERING & SURVEYING
765 Custer Road, Suite 100 • Plano, TX 75075 • 972.422.0077
TBPELS No. F-2121 and No. F-10043100 • www.spiarseng.com

website

ALTA/NSPS LAND TITLE SURVEY
COLLIN COUNTY, TEXAS
Sherley Farms

Issue Dates:	Date	Revisions
1/29/24		

Scale:
Drawn By: ED
Checked By: DKB
Sheet 2 of 2
JOB # 23-288

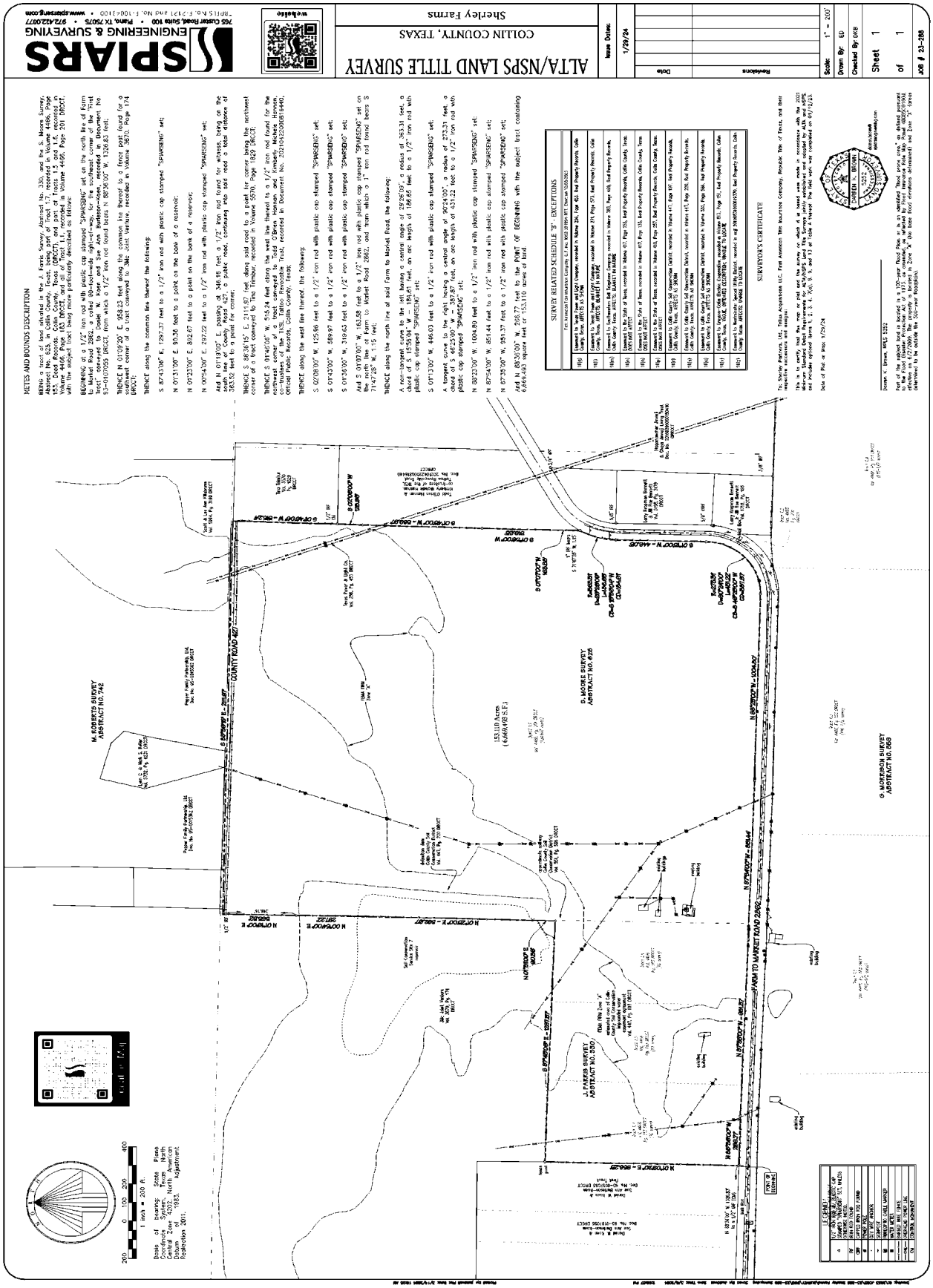
ALTA/NSPS LAND TITLE SURVEY
COLLIN COUNTY, TEXAS
Shirley Farms
SPIARS ENGINEERING & SURVEYING
765 Custer Road, Suite 100 • Plano, TX 75075 • 972.422.0077
TBPELS No. F-12121 and No. F-10064100 • www.spiarseng.com
website
Issue Dates:
1/29/24
Revisions
Date
Scale: 1" = 200'
Drawn By: ED
Checked By: DPR
Sheet 1 of 1
JOB # 23-088
METES AND BOUNDS DESCRIPTION
BEING a tract of land situated in the J. Farris Survey, Abstract No. 330, and the S. Moore Survey, Abstract No. 626, Collin County, Texas, and being all of that tract of land described as Tract 1 in Deed to Shirley Farms, recorded in Volume 4446, Page 201, Deed Records, Collin County, Texas (DRCCT), and part of Tracts 1-5 and 1-6, recorded in Volume 4446, Page 183 DRCCT, and all of Tract 1-1, recorded in Volume 4446, Page 201 DRCCT, with the subject tract being more particularly described as follows:
BEGINNING at a 1/2" iron rod with plastic cap stamped "SPIARSENG" set on the north line of Farm to Market Road 2862, a called 80-foot right-of-way, for the southeast corner of the subject tract, same being the southwest corner of a tract conveyed to Tina Bonner, recorded in Document No. 20210523000681440, Official Public Records, Collin County, Texas (OPRCCT), from which a 1/2" iron rod found bears N 88°36'07" W, 1326.83 feet;
THENCE N 01°09'20" E, 958.23 feet along the common line thereof to a fence post found for a southwest corner of a tract conveyed to J&L Joint Venture, recorded in Volume 3870, Page 174 DRCCT;
THENCE along the common lines thereof the following:
S 87°41'06" E, 1297.37 feet to a 1/2" iron rod with plastic cap stamped "SPIARSENG" set;
N 01°51'09" E, 90.56 feet to a point on the bank of a reservoir;
N 01°23'00" E, 832.67 feet to a point on the bank of a reservoir;
N 00°54'09" E, 297.20 feet to a 1/2" iron rod with plastic cap stamped "SPIARSENG" set;
And N 01°19'07" E, passing at 346.15 feet a 1/2" iron rod found for witness, being on the south line of Farm to Market Road 2862, a public road, continuing 446.98 total a total distance of 383.52 feet to a point for corner;
THENCE S 88°36'16" E, 2111.67 feet along said road to a point for corner being the northwest corner of a tract conveyed to Tina Bonner, recorded in Volume 5570, Page 1829 DRCCT;
THENCE S 01°40'08" W, 515.24 feet along the west line thereof to a 1/2" iron rod found for the northwest corner of a tract conveyed to Todd O'Brien Homes and Kimberly McKenna co-trustees of the TKSL Tattoo Revocable Trust, recorded in Document No. 20210423000818440, Official Public Records, Collin County, Texas;
THENCE along the west line thereof, the following:
S 02°08'00" W, 125.66 feet to a 1/2" iron rod with plastic cap stamped "SPIARSENG" set;
S 01°43'00" W, 659.97 feet to a 1/2" iron rod with plastic cap stamped "SPIARSENG" set;
S 01°35'00" W, 310.63 feet to a 1/2" iron rod with plastic cap stamped "SPIARSENG" set;
And S 01°07'00" W, 163.58 feet to a 1/2" iron rod with plastic cap stamped "SPIARSENG" set on the north line of Farm to Market Road 2862, and from which a 1" iron rod found bears S 71°47'25" W, 1.15 feet;
THENCE along the north line of said Farm to Market Road, the following:
A non-tangent curve to the left having a central angle of 29°26'00", a radius of 363.31 feet, a chord of S 15°55'04" W – 184.61 feet, an arc length of 186.65 feet to a 1/2" iron rod with plastic cap stamped "SPIARSENG" set;
S 01°13'00" W, 446.03 feet to a 1/2" iron rod with plastic cap stamped "SPIARSENG" set;
A tangent curve to the right having a central angle of 90°34'00", a radius of 273.31 feet, a chord of S 43°30'00" W – 388.25 feet, an arc length of 43.122 feet to a 1/2" iron rod with plastic cap stamped "SPIARSENG" set;
N 88°23'00" W, 1604.80 feet to a 1/2" iron rod with plastic cap stamped "SPIARSENG" set;
N 87°35'00" W, 951.57 feet to a 1/2" iron rod with plastic cap stamped "SPIARSENG" set;
And N 88°36'07" W, 295.77 feet to the POINT OF BEGINNING with the subject tract containing 6,656,610 square feet or 152.810 acres of land.
SURVEY RELATED SCHEDULE "B" - EXCEPTIONS
For information regarding the following items listed in Schedule B of the Title Commitment
10(a) Easement to Texas Power and Light Company, recorded in Volume 284, Page 603, Real Property Records, Collin County, Texas, AFFECTS AS SHOWN
10(b) Easement to Texas Power and Light Company recorded in Volume 291, Page 573, Real Property Records, Collin County, Texas, AFFECTS AS SHOWN
10(c) Easement to Southwestern Bell Telephone Company recorded in Volume 305, Page 468, Real Property Records, Collin County, Texas, AFFECTS, BLANKET IN NATURE
10(d) Easement to the State of Texas, recorded in Volume 1017, Page 156, Real Property Records, Collin County, Texas, AFFECTS AS SHOWN
10(e) Easement to the State of Texas, recorded in Volume 1017, Page 159, Real Property Records, Collin County, Texas, DOES NOT AFFECT
10(f) Easement to the State of Texas, recorded in Volume 1017, Page 161, Real Property Records, Collin County, Texas, DOES NOT AFFECT
10(g) Easement to Collin County Soil Conservation District, recorded in Volume 1017, Page 307, Real Property Records, Collin County, Texas, AFFECTS AS SHOWN
10(h) Easement to Collin County Soil Conservation District, recorded in Volume 1017, Page 308, Real Property Records, Collin County, Texas, AFFECTS AS SHOWN
10(i) Easement to Oncor Electric Delivery Company recorded in Volume 2011, Page 191, Real Property Records, Collin County, Texas, TRUE APPROXIMATE LOCATION, UNABLE TO LOCATE
10(j) Easement to Oncor Electric Delivery Company recorded in Volume 2011, Page 196, Real Property Records, Collin County, Texas, AFFECTS AS SHOWN
SURVEYOR'S CERTIFICATE
To: Shirley Partners, LTD., Tellus Acquisitions LLC, First American Title Insurance Company, Republic Title of Texas, and their respective successors and assigns:
This is to certify that this map or plat and the survey on which it is based were made in accordance with the 2021 Minimum Standard Detail Requirements for ALTA/NSPS Land Title Surveys, jointly established and adopted by ALTA and NSPS, and includes optional items 1, 2, 3, 4, 7(a), 8, 9, and 13 of Table A thereof. The field work was completed on 01/16/23.
Date of Plat or Map: 1/29/24
Darren K. Brown, RPLS 5252
Part of the subject land is located in a 100-year flood plain, or is an identified flood prone area, as defined pursuant to the Flood Disaster Protection Act of 1973, as amended, as shown on Flood Insurance Rate Map, Panel 48085C0190J dated June 2, 2009 (the base flood elevation determined) and Zone "X" (areas determined to be outside the 500-year floodplain).
LEGEND
Base of bearing: State Plane Coordinates, North American Datum of 1983, Central Zone 4202, Adjustment Realization 2011.
1 inch = 200 ft.
200 0 100 200 400
FARM TO MARKET ROAD 2862
COUNTY ROAD 407
M. ROBERTS SURVEY ABSTRACT NO. 742
J. FARRIS SURVEY ABSTRACT NO. 330
B. MOORE SURVEY ABSTRACT NO. 626
G. MORRISON SURVEY ABSTRACT NO. 668
153.110 Acres (6,669,795 S.F.)
POINT OF BEGINNING

Exhibit C

Illustrative Layout

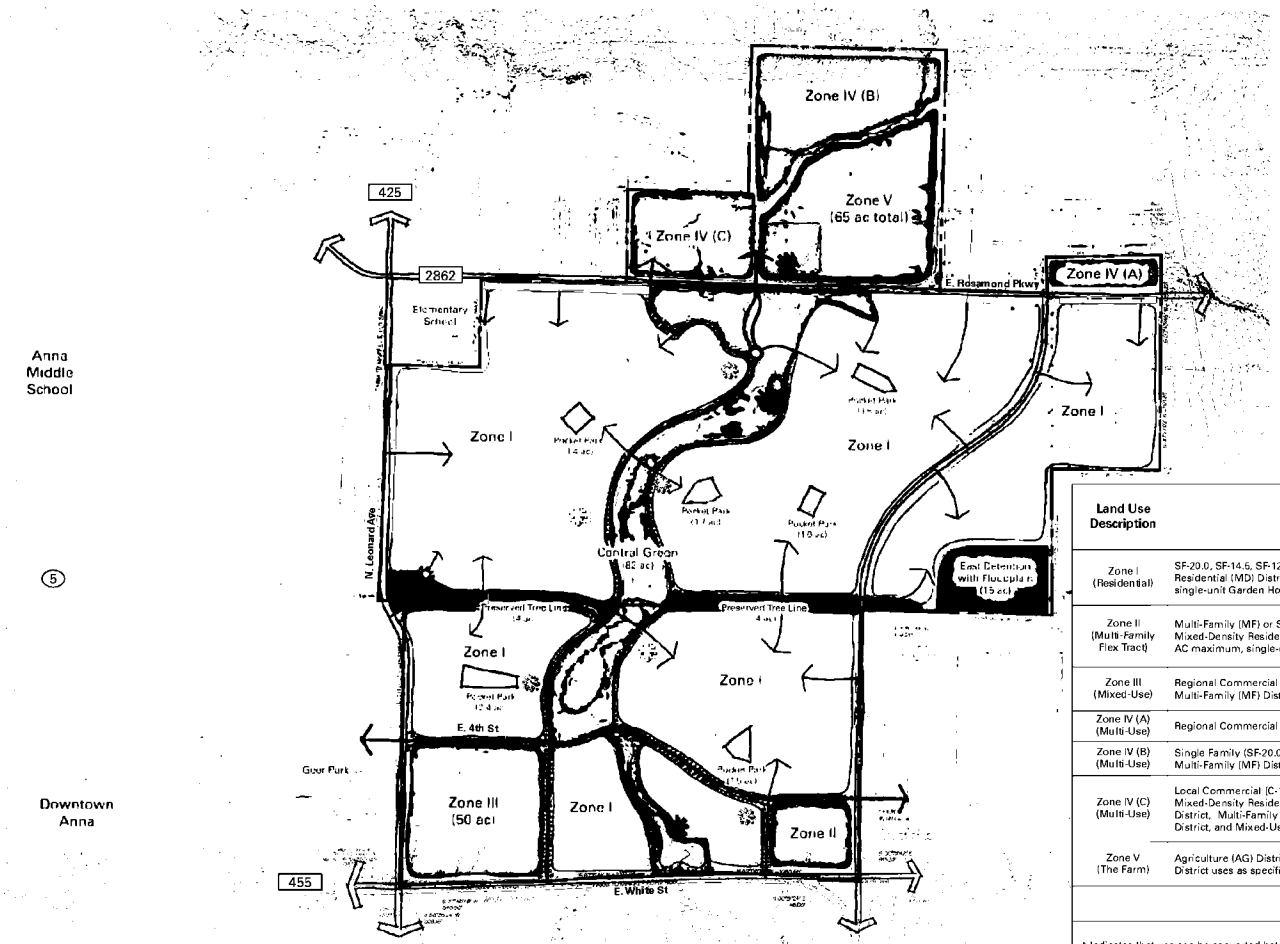

Open Space Summary		
	Central Green	±74 ac
	Preserved Tree Line	±8 ac
	East Detention with Floodplain	±15 ac
	Pocket Park	±10 ac
	Miscellaneous	±10 ac
	Total	±117 ac

Note: Pocket Park locations and sizes are conceptual and final location and size will be determined at platting

Legend

- A Farm-style Amenity Center with operational farming facilities for the benefit of community residents and the broader community
- Amenity Center No. 1 – to be precisely located at the time of Phase 1 Preliminary Plat
- Amenity Center No. 2 – to be precisely located and construction to start prior to the issuance of the 1,750th building permit
- Sherley Squares - conceptual locations to be determined through the platting process

Land Use Description	Zoning Classification	Maximums	
		Single-Family (SF) DUs	Multi-Family (MF) DUs
Zone I (Residential)	SF-20.0, SF-14.5, SF-12.0, SF-10.5, SF-8.4, SF-7.2, SF-6.0, Mixed-Density Residential (MD) District and Mixed-Use (MU) District limited to 8 AC Maximum, single-unit Garden Homes and single-unit Townhomes	3,030	0
Zone II (Multi-Family Flex Tract)	Multi-Family (MF) or SF-20.0, SF-14.5, SF-12.0, SF-10.5, SF-8.4, SF-7.2, SF-6.0, Mixed-Density Residential (MD) District and Mixed-Use (MU) District limited to 8 AC maximum, single-unit Garden Homes and single-unit Townhomes	160*	200*
Zone III (Mixed-Use)	Regional Commercial (C-2) District, Light Industrial (I-1) District, Multi-Family (MF) District, and Mixed-Density Residential (MD) District	–	600**
Zone IV (A) (Multi-Use)	Regional Commercial (C-2) District and Light Industrial (I-1) District	–	–
Zone IV (B) (Multi-Use)	Single Family (SF-20.0) District, Single Family Cottage Residential District, and Multi-Family (MF) District	–	–
Zone IV (C) (Multi-Use)	Local Commercial (C-1) District, Single Family Residential (SF-20.0) District, Mixed-Density Residential (MD) District, Single Family Cottage Residential District, Multi-Family (MF) District, Agriculture (AG) District, Light Industrial (I-1) District, and Mixed-Use (MU) District	–	–
Zone V (The Farm)	Agriculture (AG) District, Local Commercial (C-1) District and Mixed-Use (MU) District uses as specifically noted in Exhibit D Development Standards	–	–
	TOTAL	3,190	800

* Indicates that use can be converted between single-family and multi-family as noted in the Development Standards Exhibit D.

** Indicates that use is broken out into different subcategories as noted in the Development Standards Exhibit D.

– Indicates that maximums are to be determined by site plans and plats as development occurs.

Note: Non-Residential uses do not have a prescribed maximum other than available acreage and specific limits within the Development Standards Exhibit D.

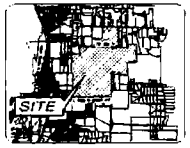

LOCATION MAP / KEY MAP

The information shown is based on the best information available and is subject to change without notice.

EXHIBIT C - ILLUSTRATIVE LAYOUT

SHERLEY FARMS

CITY OF ANNA, COLLIN COUNTY, TEXAS
G. MORRISON SURVEY ~ ABSTRACT NO. 559

DECEMBER OF 2024

2024 - 20240001590039 12/23/2024 11:23 AM Page 55 of 134

Exhibit D

Development Standards

Exhibit D
Development Standards

TABLE OF CONTENTS:

SECTION 1. ADMINISTRATION
SECTION 2. USE CRITERIA BY ZONE
SECTION 3. OPEN SPACE STANDARDS
SECTION 4. AMENITIES
SECTION 5. SUBDIVISION ORDINANCE MODIFICATIONS
SECTION 6. ZONING ORDINANCE MODIFICATIONS
SECTION 7. ZONING SITE DESIGN CHANGES
SECTION 8. ZONING LANDSCAPING CHANGES
SECTION 9. ARTICLE 9.05 SIGN ORDINANCE
SECTION 10. DEFINITIONS
SECTION 11. ATTACHMENTS

SECTION 1. ADMINISTRATION

A. Interpretation

In the event of any conflict between the City Regulations and the development standards on this **Exhibit D**, the development standards on this **Exhibit D** shall control. The project shall abide by all City regulations, as amended herein.

B. Illustrative Plan - Exhibit C

The subject property, referred to herein as the "Site", shall generally develop per **Exhibit C**, the Illustrative Plan. The Illustrative Plan displays the general location and configuration of land uses, arterial and collector roads, and other area features. Exhibit C shall serve as the Concept Plan to inform future Preliminary Site Plans.

C. Administrative Modifications

Modifications to the Illustrative Plan, **Exhibit C,** shall be administered per the thresholds in Table 1.. Preliminary Site Plans shall be administered per the thresholds in Table 1. Minor Amendments shall be administratively approved by the Director of Development Services if such modifications otherwise comply with these Development Standards. Major Amendments shall require approval of the Planning and Zoning Commission and City Council. Major Amendments shall require a complete amended and restated Planned Development District document rather than a brief amendment that refers to the original Planned Development District document.

Table 1: Major and Minor Amendments

Minor Amendment	Major Amendment
Modification up to 10% to the numerical standards of the Planned Development District	Modification greater than 10% to the numerical standards of the district
Throughfares and Blocks may be modified while maintaining the general throughfare connectivity as depicted in **Exhibit C**.	Any change that does not maintain connectivity as generally depicted in **Exhibit C**.
Modification of the anticipated order of development for the overall property	N/A
Modifications to approved Street Cross-Sections to accommodate specific considerations regarding traffic calming, emergency vehicle access, accommodate pedestrian and bike traffic, and modify on-street parking configuration	N/A

D. Applicability of Subdivision Ordinance, Design Standards and Zoning Ordinance

The subject property is intended to be an architecturally and culturally significant tract of land that is meaningfully located along two regionally significant east-west thoroughfares and just east of Downtown Anna. Except as otherwise provided in these Development Standards (**Exhibit D**), the City's subdivision ordinance, design standards and zoning ordinance in effect at the time of the written approval of this Planned Development shall apply.

SECTION 2. USE CRITERIA BY ZONE

The site shall be developed according to applicable city regulations as amended herein to the Zones as depicted in **Exhibit C**. The Site is divided into six zones with distinctive characters and uses permitted in each Zone as described herein.

A. Zone I - Residential Tracts

1. Permitted Uses

The tracts shown on **Exhibit C** as Zone I shall be developed in accordance with one or more of the following zoning district regulations as modified herein and may be developed with any use permitted in any of the following zoning districts: SF-20.0, SF-14.5, SF-12.0, SF-10.5, SF-8.4, SF-7.2, SF-6.0, Mixed-Density Residential (MD) District uses as outlined herein, Garden Home Unit, Townhome Unit and Mixed-Use (MU) District. Additionally, school uses and Civic/City uses are permitted within the Residential Tracts. These tracts shall include outdoor amenitization of the adjacent open space and detention areas.

2. Lot Type Criteria

A maximum of 3,030 dwelling units may be attached or detached. Within Zone I the 3,030 dwelling unit product mix shall be allocated in accordance with the following proportional limitations:

Table 2: Lot Type Allocation

Lot Type	Zoning Designation	Site Approx. Lot Width	Unit Mix Thresholds
A	SF-20	100'	A Minimum of 6% of total lots in Zone I
B	SF-14.5	100'	
C	SF-12.0	90'	A Minimum of 6% of total lots in Zone I
D	SF-10.5	80'	
E	SF-8.4	70'	
F	SF-7.2	60'	A Maximum of 60% of total lots in Zone I
G	SF-6.0	50'	
H	MD 40	40'	A Maximum of 30% of total lots in Zone I
I	MD Single-Family Attached (Townhomes)	25'	
J	MD Garden Homes	60'	

Note: To maintain a balance of lot types, the minimum percentage of Type A through E lots (in aggregate) will be at least 10% of the total number of lots indicated on City-approved Civil Plans to be measured at the point where an increment of 750 lots is triggered by the submission of Civil Plans for City Approval. The percentage of Type A through E lots in excess of 10% shall be counted

as a credit that will accumulate credit to the next 750 lot increment measure so that the measure is accounted for as a cumulative requirement. The Civil Engineering Plans for each Phase shall include a table that details this condition on a cumulative basis.

3. **Mixed-Use Node Criteria**
   A maximum of four (4) two-acre Mixed-Use Nodes ("Sherley Squares") at select locations within Zone I. Exact locations of Mixed-Use Nodes shall be indicated on a Preliminary Site Plan within the Zone I area as depicted on Exhibit C. Where a Mixed-Use Node is placed it shall replace the underlying zoning on the parcel in which it is used. If the Mixed-Use Node is not used the underlying zoning shall remain. These Mixed-Use Node locations shall maintain a 1,000' separation between individual Mixed-Use Nodes. The Mixed-Use Node locations shall be limited to either restaurant, retail, live-work or other service uses intended to provide more neighborhood services dispersed throughout the development. The Mixed-Use Nodes shall be developed according to the Mixed-Use (MU) District Dimensional Standards and shall be required to meet the parking requirements of the particular use developed with on-street parking, off-street parking or a mixture of both. On-street parking will be parallel.

B. Zone II - Multifamily (Flex Tract)

1. **Permitted Uses**
   The tract shown on **Exhibit C** as Zone II shall be developed in accordance with either the Multi-Family Residential (MF) District or may revert to the Residential zoning district regulations permitted in Zone I as modified herein along with school uses and Civic/City uses. This tract shall include outdoor amenitization of the adjacent open space and detention areas. This tract shall be subject to a maximum multi-family dwelling unit count of 200 units.

2. **Unit Reallocation Criteria**
   Should this tract revert to one or more of the Residential zoning districts permitted in Zone I, the 200 Multi-Family units shall increase the 3,030 permitted dwelling units by 160 units to a revised total of 3,190 Single Family units. If developed as single family, the unit thresholds in **Table 2: Lot Type Allocation** of Zone I above shall apply.

3. **Site Plan Requirement**
   Development in Zone II requires Site Plan approval to ensure conformance with city development standards as modified herein.

C. Zone III – South Multi-Purpose Commercial Tract

1. **Permitted Uses**
   The tract shown on **Exhibit C** as Zone III shall be developed in accordance with one or more of the following zoning district regulations as modified herein and may be developed with any use permitted in their corresponding base zoning districts, unless otherwise stated:
   - Regional Commercial (C-2) District:
     - All permitted uses
   - Light Industrial (I-1) District, limited to the following uses:
     - Batching Plant (Permitted as a Temporary Use)
     - Brewery/Distillery
     - Tasting Room
     - Self-Storage (Mini-Warehouse) Limited to 125,000 SF of ground-level floor area.
     - Commercial Kitchen
     - Food Truck Park
     - Greenhouse and Nursery
   - Multi-Family Residential (MF) District:
     - All permitted uses

  - Total Multi-Family units not to exceed 600 total units
  - Townhome Unit (multiple DUs on single platted lot) – limited to a maximum unit count of 100
  - Duplex Unit (multiple DUs on single platted lot) – limited to a maximum unit count of 100
  - Condos - limited to a maximum of unit count of 100
  - Multi-Family building types, other than Townhome Unit and Duplex Unit, limited to a maximum unit count of 400 Multi-Family Units
- Mixed-Density Residential (MD) District:
  - All permitted uses (including Single-Family Attached (single DU on single platted lot, including without limitation individual-lot townhome) and Two-Family Dwellings (single DU on single platted lot including without limitation individual-lot duplex)

2. Prohibited Uses

Prohibited Uses in Zone III include the following:

- Pawn Shop / Pay day loans
- Radio/Television studios
- Taxidermist
- Funeral Services
- Governmental service yards
- Flea Market

3. Dimensional Standards

The Zoning Districts selected for Zone III shall be developed in accordance with their corresponding dimensional standards:

- Regional Commercial (C-2) District, as modified herein
- Light Industrial (I-1) District, as defined in Section 9.04.023
- Multi-Family Residential (MF) District, as modified herein
- Mixed-Density Residential (MD) District, as modified herein

If a proposed use is permitted in multiple zoning categories, the applicant will indicate which set of dimensional standards will apply on the site plan.

4. Buffer Criteria:

Any permitted Light Industrial (I-1) use shall be buffered from being directly adjacent to for-sale single-family attached or detached housing by a buffer street, buffer use, or a landscape buffer.

- A Buffer street is a Collector or larger street;
- A Buffer use is either Multi-Family, Mixed-Use, Commercial, or Retail uses in-between Light Industrial uses and for-sale single-family attached or detached housing.
- A landscape buffer shall be a landscaped area of at least 25 feet in width along the common property line planted with one canopy tree for each 30 linear feet, provided that the spacing shall be reasonably expanded to accommodate a specific tree species requiring more spacing to promote long term health and growth.

5. Site Plan Requirement

Development in Zone III requires Site Plan approval to ensure conformance with city development standards.

D. Zone IV – North Multi-Purpose Commercial Tracts

1. Site Plan Requirement

Development in Zone IV and its sub-zones require Site Plan approval to ensure conformance with city development standards.

2. Zone IV(A)

a. Permitted Uses

The tracts shown on **Exhibit C** as Zone IV(A) shall be developed in accordance with one or more of the following zoning district regulations as modified herein and may be developed with any use permitted in their corresponding base zoning districts, unless otherwise stated:

- Regional Commercial (C-2) District:
  - All permitted uses
- Light Industrial (I-1) District, limited to the uses following uses:
  - Batching Plant (Permitted as a Temporary Use)
  - Brewery/Distillery
  - Commercial Kitchen
  - Food Truck Park
  - Outdoor Storage
  - Feed and Farm Supply
  - Greenhouse and Nursery
  - Auto Repair (Heavy and Light)
  - Heavy Equipment Sales and Rentals
  - Athletic Field (Public and Private)
  - Community Center (Public and Private)
  - Country Club
  - Racetrack
  - Sport Shooting Range
  - Park
  - Commercial Cleaning Facility
  - Self-Storage (Mini Warehouse)
  - Wholesale Showroom Facility
  - Assisted Living Facility
  - Child Care Facility, Daycare
  - Community Home for Persons with Disabilities
  - Agriculture
  - Agritainment
  - Outdoor Storage and Display
  - Stable
  - Swimming Pool Private

b. Prohibited Uses

Prohibited Uses in Zone IV(A) include the following:

- Radio/Television studios
- Taxidermist
- Funeral Services
- Governmental service yards
- Flea Market

c. Dimensional Standards

The Zoning Districts selected for Zone IV(A) shall be developed in accordance with their corresponding dimensional standards:

- Regional Commercial (C-2) District, as modified herein
- Light Industrial (I-1) District, as defined in Section 9.04.023

If a proposed use is permitted in multiple zoning categories, the applicant will indicate which set of dimensional standards will apply on the site plan.

3. Zone IV(B)

a. Zone Vision

Zone IV(B)- is envisioned to be a primarily residential area surrounded by floodplain open space.

b. Permitted Uses

The tract shown on **Exhibit C** as Zone IV(B) shall be developed in accordance with one or more of the following zoning district regulations as modified herein and may be developed with any use permitted in their corresponding zoning districts, unless otherwise stated:

- Single Family Residential (SF-20.0) District:
  - All permitted uses
- Single-Family Cottage Residential District:
  - Industrialized Home (Modular Home)
  - Manufactured Homes (with permanent foundation)
  - Single-Family Dwelling, detached
  - Single-Unit or Duplex Unit Park
  - Bed and Breakfast Facility (SUP required)
  - Dormitory (SUP required)
  - Athletic Field, Public
  - Athletic Field, Private (SUP required)
  - Community Center, Public
  - Community Center, Private
  - Park
  - Swimming Pool
  - Civic Center
  - Public Library, Museum or Art Gallery (SUP required)
  - Religious Land Use
  - School
  - Child Care Home (≤6 Children) (SUP required)
  - Electrical Substation (SUP required)
  - Gas Metering Station (SUP required)
  - Gas Metering Station with Odorizer (SUP required)
  - Governmental Service yard (SUP required)
  - Radio, TV or Microwave Operations, Amateur (SUP required)
  - Accessory Building
  - Accessory Dwelling Unit (SUP required)
  - Carport
  - Home Occupation
  - Garage
  - Swimming Pool, Private (SUP required)
  - Wind Energy Conversion System (SUP required)
  - Batching Plant (Permitted as a Temporary Use)
  - Field or Sales Office
  - May include Shared Workspace as a permitted accessory use that will serve as a residential amenity
- Multi-Family Residential (MF) District:
  - Cottage Unit only (if multiple DUs on a single platted lot)

c. Dimensional Standards

The Zoning Districts selected for Zone IV(B) shall be developed in accordance with their corresponding dimensional standards:

- Single Family Residential (SF-20.0) District, as modified herein
- Single-Family Cottage Residential District, as defined herein
- Multi-Family Residential (MF) District, as defined herein

If a proposed use is permitted in multiple zoning categories, the applicant will indicate which set of dimensional standards will apply on the site plan.

4. Zone IV(C)

a. Permitted Uses

The tracts shown on **Exhibit C** as Zone IV(C) shall be developed in accordance with one or more of the following zoning district regulations, as modified herein, and may be developed with any use permitted in their corresponding base zoning districts, unless otherwise stated:

- Local Commercial (C-1) District:
  - All permitted uses
  - Medical Care Facility
  - Childcare Facility, Daycare
- Single Family Residential (SF-20.0) District:
  - All permitted uses
- Mixed Density (MD) Residential
  - All permitted uses
- Single-Family Cottage Residential District:
  - Industrialized Home (Modular Home)
  - Manufactured Home (with permanent foundation)
  - Single-Family Dwelling, detached
  - Single-Unit or Duplex Unit Park
  - Bed and Breakfast Facility (SUP required)
  - Dormitory (SUP required)
  - Athletic Field, Public
  - Athletic Field, Private (SUP required)
  - Community Center, Public
  - Community Center, Private
  - Park
  - Swimming Pool
  - Civic Center
  - Public Library, Museum or Art Gallery (SUP required)
  - Religious Land Use
  - School
  - Child Care Home (≤6 Children) (SUP required)
  - Electrical Substation (SUP required)
  - Gas Metering Station (SUP required)
  - Gas Metering Station with Odorizer (SUP required)
  - Governmental Service yard (SUP required)
  - Radio, TV or Microwave Operations, Amateur (SUP required)
  - Accessory Building
  - Accessory Dwelling Unit (SUP required)
  - Carport
  - Home Occupation
  - Garage
  - Swimming Pool, Private (SUP required)
  - Wind Energy Conversion System (SUP required)
  - Batching Plant (Permitted as a Temporary Use)
  - Field or Sales Office
  - May include Shared Workspace as a permitted accessory use that will serve as a residential amenity
- Multi-Family Residential (MF) District:
  - Cottage Unit only (if multiple DUs on single platted lot)

- Agricultural (AG) District:
    - All permitted uses
    - Agritainment
    - Itinerant Vendor
    - Farmer's Market
- Light Industrial (I-1) District, limited to the uses following uses:
    - Batching Plant (Permitted as a Temporary Use)
    - Brewery/Distillery
    - Tasting Room
    - Commercial Kitchen
    - Food Truck Park
    - Greenhouse and Nursery
    - Feed and Farm Supply
    - Bar
    - Private Club
- Mixed Use Development
    - All permitted uses

b. Dimensional Standards

The Zoning Districts selected for Zone IV(C) shall be developed in accordance with their corresponding dimensional standards:

- Local Commercial District (C-1), as modified herein
- Single Family Residential (SF-20.0) District, as modified herein
- Single Family Cottage Residential District, as modified herein
- Mixed Density (MD) Residential, as modified herein
- Multi-Family Residential (MF) District, as defined herein
- Agricultural (AG) District, as defined herein
- Light Industrial (I-1) District, as defined herein
- Mixed-Use (MU) District, as defined herein

If a proposed use is permitted in multiple zoning categories, the applicant will indicate which set of dimensional standards will apply on the site plan.

E. Zone V - The Farm

1. Zone Vision

The Farm is envisioned to be an agricultural reserve with agricultural focused commercial activities.

2. Permitted Uses

Tracts shown on **Exhibit C** as Zone V shall be developed in accordance with one or more of the following zoning district regulations as modified herein and may be developed with any use permitted in their corresponding base zoning district, unless otherwise stated:

- Section 9.04.028 land use table AG uses already permitted by right
- Agritainment
- Artist Studio
- Bar
- Brewpub
- Food preparation and sales
- Food Truck Park
- Grocery Store
- Mixed-Use (MU)
- Restaurant and tasting room
- Outdoor Dining
- Farmer's Market

- On-Site Residence for Farmer
- Multi-Family (Permitted with SUP)
- Hotel (Permitted with SUP)
- Brewery/Distillery (Permitted with SUP)
- Childcare facility (Permitted with SUP)

3. **Prohibited Uses**
   Prohibited Uses in Zone V include the following:
   - Feedlot
   - Mobile Home / Manufactured Homes with chassis and wheels (personal property)
   - Wind Energy Conversion System
   - Country Club
   - Golf Course
   - Carport
   - Concrete Batch Plant
   - Flea Market
   - Seasonal Roadside Stand

4. **Dimensional Standards**
   The Zoning Districts selected for Zone V shall be developed in accordance with their corresponding dimensional standards:
   - Agricultural (AG) District, as defined herein
   - Local Commercial District (C-1), as modified herein
   - Mixed-Use (MU) District, as defined herein

   If a proposed use is permitted in multiple zoning categories, the applicant will indicate which set of dimensional standards will apply on the site plan.

5. **Site Plan Requirement**
   Development in Zone V requires Site Plan approval to ensure conformance with city development standards.

SECTION 3. OPEN SPACE

A. Vision

The vision for the community includes extensive open space and activation of detention areas with concrete trails and single-loaded streets that preserve the public view of the natural beauty. The pocket parks are intended to provide valuable open space within walking distance of most residential units, provide passive and moderately active recreational opportunities including, but not limited to, open play areas, natural interpretive areas, neighborhood playgrounds, children's water play areas, and small neighborhood gathering spaces. The central green is intended to create a natural scenic connection through the center of the community and shall consist of trails, natural landscaping, usable open space, and ponds that are reflective of the native environment. The open space requirements in 9.04.029(d) (3) shall not apply to Mixed-Density Residential types, multifamily units or residential uses in Zones II, III, IV and V, as the open space provided in Zone I is to serve the needs for the entire development Site.

B. Required Elements

Open space, that is publicly accessible, whether owned and maintained by the City of Anna, the Owners Association, or other ownership entity, shall count toward the minimum open space requirement. The open space and amenities identified in this section and the Open Space and Trails **Exhibit J** satisfies the open space and park requirements for the Site in its entirety and no park acquisition or development fees are applicable. The open space for the Site shall include:

1. A regional trail running north / south through the project along the primary open space areas which will include trailheads.
2. Incorporation of pocket parks and activated open space throughout the community, as generally shown on the Illustrative Plan. The size and location of pocket parks and activated open space shall be generally delineated on a Preliminary Site Plan and then finalized through the platting process. Pocket parks and activated open space may be spread across multiple locations within the Zone provided the overall amount of the requirement is met as depicted on **Exhibit C.**

C. Maintenance

Open Space and structures thereon shall be maintained by the property owner, the Owners Association, or other ownership entity unless otherwise dedicated to the City. The property owner, Owners Association, or other ownership entity may adopt rules and regulations regarding access, permitted uses, security (policing) and maintenance responsibilities for the Open Space.

SECTION 4. AMENITIES

Amenity Centers shall be located on a private lot and shall not count towards any open space requirement.

A. One large amenity center to be located in Phase 1 including, at a minimum: an amenity center building, a swimming pool, bathrooms, a playground, and an open recreation area. Construction for this amenity center shall commence prior to the issuance of the 300th single family building permit.

B. A second amenity center on the southern side of the community, including at a minimum: an amenity center building, bathrooms, a playground, and an open recreation area. Construction for this amenity center shall commence prior to the issuance of the 1,750th single family building permit.

SECTION 5. SUBDIVISION ORDINANCE MODIFICATIONS

A. Revise 9.02.081.a to read:

The construction, arrangement, character, extent, width, grade and location of all streets shall conform to the city's comprehensive plan and design standards and shall be considered in their relation to the following, whether the streets are within the city, or within its ETJ area. Street sections presented in this **Exhibit D** shall supersede any other City of Anna ordinances or standards.

B. Revise 9.02.081.c.4 to read:

Approach streets and access.

All subdivisions must have at least two points of vehicular access and must be connected via improved streets (streets that meet the city standards) to the city's improved thoroughfare and street system by one or more approach streets of such dimensions and improved to such standards as required herein. All residential subdivisions, with the exception of multifamily dwellings and single-unit or duplex unit park developments, shall provide no less than one entrance for each 50 lots including stubs for future development. ~~and in no case shall have more than 150 lots for each connection to an existing street.~~

C. Revise 9.02.081.c.5.A to read:

Off-site and adjacent improvements based on traffic impact analysis (TIA) of project specific impacts.

a. If in the opinion of the City Engineer or Director of Development Services, sufficient vehicular access and street capacity approaching and adjacent to the subdivision is not available to serve the proposed subdivision, the city may require the developer to provide a traffic impact analysis ("TIA") of the proposed development. ~~Such TIA when required shall be submitted to the City as part of the preliminary~~

~~plat application.~~ Based on the TIA, necessary improvements attributable to the proposed development may be incorporated into the development plans at the discretion of city staff.

D. Revise 9.02.081.L.1 to read:

Street section requirements.

Typical street sections shall be based upon projected traffic volume, existing soil conditions, and drainage condition and requirements. Street right-of-way widths, pavement widths, and median widths shall be as shown on ~~the comprehensive plan, in the City's design standards, and shall specifically be as specified in Division 9, Table 1.~~ **Exhibit D** in the Development Agreement.

E. Revise 9.02.081.o.1 to read:

Maximum and minimum length of block or street segments.

The maximum length of any block or street segment, ~~including~~ excluding looped streets, shall be 1,200 feet and the minimum length of any block or street segment shall be 400 feet. except in a key lot scenario, as measured along the street centerline and between the point(s) of intersection with other through streets. The minimum block length for a horseshoe street shall be 260 feet. A cul-de-sac or dead-end street shall not be considered a through street and shall not exceed 600' in length for Lot Types F through J, but otherwise shall not exceed 900' in length. The block length is not measured along the side of a block that does not include the front of any lot.

F. Revise 9.02.081.t.1 to read:

Residential driveways.

Residential driveway cuts shall not be allowed on streets that are larger than a neighborhood (50-foot right-of-way) or residential collector street (60-foot right-of-way). ~~Residential driveways shall be at least 30 feet from any intersection.~~ For corner lots residential driveways shall be located on the opposite side of the lot from the intersection. Rear and side driveway access to collector and thoroughfare streets shall be prohibited.

G. Revise 9.02.083.b to read:

Residential alleys.

~~In residential districts, alleys shall be parallel, or approximately parallel, to the frontage of the street. Alleys in residential districts shall provide a minimum of 20 feet of right-of-way and 15 feet of pavement.~~ Alleys in residential districts shall provide a Right-of-way and pavement width in compliance with the street sections presented in **Exhibit D** of the Development Agreement.

H. Revise 9.02.086.a.1 to read:

Pedestrian concrete walkways (sidewalks) not less than the following width shall be provided along both sides of newly constructed streets as follows:

Street Type	Sidewalk Width
Arterial	6 feet
Divided and undivided collector	6 feet
Neighborhood collector	6 feet
Local residential	~~6~~5 feet

I. Revise 9.02.087.e to read:

Double frontage lots.

Residential subdivisions with double frontage lots shall be avoided, except where they may be essential to provide separation from arterial or collector streets, or to overcome a specific disadvantage or hardship imposed by topography or other factors. Where lots have double frontage, appropriate building setback lines shall be established for each street side, and rear yard screening shall be provided in accordance with section 9.02.167 of this article. Except as provided within this subsection, residential lots shall not back onto any residential street or collector street within a residential area or neighborhood. ~~and shall not have more than ½ of their perimeter boundaries along streets~~

J. Revise 9.02.087.g to read:

Residential lot depth.

(1) No lot shall be platted less than 100 feet in depth unless located within the mixed density residential (MD) District, the downtown (DT) District, applicable planned development (PD) District, or districts where minimum lot depth is N/A.

(2) Lots facing or backing on arterial or collector roadways (rights-of-way greater than 60 feet), shall be at least 10 feet deeper than the minimum required depth of lots facing the local streets within the development. This depth is in addition to the minimum 20-foot-wide landscape buffer requirement for residential developments when adjacent to arterial and collector roadways. If a landscape buffer of 30' or deeper is provided, the requirement for a 10' deeper residential lot shall not apply.

K. Revise 9.02.087.b to read:

Minimum frontage on a public street.

Each lot on a subdivision plat shall front onto a dedicated, improved public street or HOA owned open space lot, unless platted as an approved private street subdivision in accordance with these subdivision regulations. All single family detached lots shall have a minimum of 40 feet of frontage as measured at the front building setback line fronting a dedicated, improved street unless other provisions have been authorized under article 9.04 or an approved planned development district. Lots that front onto an HOA-owned open space lot shall have access to a dedicated, improved public alley.

L. Revise 2.14.A of the City of Anna Design Standards Manual to read:

Residential: Residential driveways to serve two car garages shall be not less than eleven (11) feet nor more than ~~twenty (20)~~ twenty-two (22) feet in width at the property line. The width of the driveway will be larger at the garage for a three car (width to be maximum of twenty-eight (28) feet). Shared driveways and garages larger than three cars shall be a case-by-case basis as may be approved administratively by city staff. Residential driveways shall be separated from one another by a distance of at least ten (10) feet. The radii of all residential driveway returns shall be a minimum of five (5) feet and shall not extend past the adjoining property line. ~~The driveway approaches devoted to one use shall not occupy more than sixty percent (60%) of the frontage abutting the roadway or alley.~~

SECTION 6. ZONING ORDINANCE MODIFICATIONS

A. Sec. 9.04.010 Single-Family Residential (SF-20.0) District (Type A Lot)

(a) Purpose. The Single-Family Residential (SF-20.0) district is designed to accommodate a single-family residential development lot design on approximately half-acre (1/2 acre) lots. The district may be appropriately located near agricultural and single-family residential uses. This district implements the character and intent of the Comprehensive Plan's Estate Residential Place Type.

(b) Uses. See Table 19: Use Table and all applicable regulations in Division 3.

(c) Dimensional Standards. Development in the Single-Family Residential (SF-20.0) district shall follow Table 3: Single-Family Residential (SF-20.0) District Dimensional Standards, as modified.

Table 3: Single-Family Residential (SF-20.0) District Dimensional Standards – Type A

Single-Family Residential (SF-20.0) District Dimensional Standards		
Lot Requirements		
A	Lot Area ~~(min.)~~	20,000 square feet average 15,000 square feet minimum
B	Lot Width (min.) as measured at front building setback line	100 feet
C	Lot Depth (min.)	150 feet
D	Lot Coverage (max.)	40%

Setback Requirements		
E	Front Yard (min.)	Garage - 25 feet House Face / Porch – 20 feet
F	Rear Yard (min.)	25 feet
G	Side Yard (min.)	10 feet
H	Corner Side Yard (min.)	15 feet
Building Requirements		
I	Building Height (max.)	35 feet
Additional Applicable Requirements within the Zoning Ordinance		
Sec. 9.04.041 – Dimensional Regulations Sec. 9.04.042 – Site Design Requirements Sec. 9.04.043 – Parking Sec. 9.04.044 – Loading Sec. 9.04.045 – Landscaping		Sec. 9.04.046 – Screening and Fencing Sec. 9.04.047 – Outdoor Lighting Sec. 9.04.048 – Trash Sec. 9.04.049 – Performance Standards

(d) Special Regulations.
(1) The Single-Family Residential (SF-20.0) district shall not be within 1,200 feet of a Major Highway as designated on the 2045 Master Thoroughfare Plan. This distance shall be measured from the right-of-way centerline to the residential property line.
(2) The corner side yard for "key lots" shall meet the minimum front yard setback requirement.
(3) Average lot size will be calculated based upon the lots of the applicable type on the Final Plat and the average lot sizes will be noted on the lot size table.

B. Sec. 9.04.011 Single-Family Residential (SF-14.5) District (Type B Lot)

(a) Purpose. The Single-Family Residential (SF-14.5) district is designed to accommodate a single-family residential development design on roughly one-third acre (⅓-acre) lots. The district can be appropriately located near agricultural and single-family residential uses. This district implements the character and intent of the Comprehensive Plan's Suburban Living Place Type.
(b) Uses. See Table 19: Use Table and all applicable regulations in Division 3.
(c) Dimensional Standards. Development in the Single-Family Residential (SF-14.5) district shall follow Table 4: Single-Family Residential (SF-14.5) District Dimensional Standards, as modified.

Table 4: Single-Family Residential (SF-14.5) District Dimensional Standards – Type B

Single-Family Residential (SF-14.5) District Dimensional Standards		
Lot Requirements		
A	Lot Area (min.)	14,500 square feet Average 12,150 square feet minimum
B	Lot Width (min.) as measured at front building setback line	90 feet
C	Lot Depth (min.)	135 feet
D	Lot Coverage (max.)	45%
Setback Requirements		
E	Front Yard (min.)	Garage - 25 feet House Face / Porch – 20 feet
F	Rear Yard (min.)	25 feet
G	Side Yard (min.)	8 feet
H	Corner Side Yard (min.)	15 feet
Building Requirements		
I	Building Height (max.)	35 feet
Additional Applicable Requirements within the Zoning Ordinance		

Sec. 9.04.041 – Dimensional Regulations Sec. 9.04.042 – Site Design Requirements Sec. 9.04.043 – Parking Sec. 9.04.044 – Loading Sec. 9.04.045 – Landscaping	Sec. 9.04.046 – Screening and Fencing Sec. 9.04.047 – Outdoor Lighting Sec. 9.04.048 – Trash Sec. 9.04.049 – Performance Standards

(d) Special Regulations.
(1) The Single-Family Residential (SF-14.5) district shall not be within 1,200 feet of a Major Highway as designated on the 2045 Master Thoroughfare Plan. This distance shall be measured from the right-of-way centerline to the residential property line.
(2) The corner side yard for "key lots" shall meet the minimum front yard setback requirement.
(3) Average lot size will be calculated based upon the lots of the applicable type on the Final Plat and the average lot sizes will be noted on the lot size table.

C. Sec. 9.04.012 Single-Family Residential (SF-12.0) District (Type C Lot)

(a) Purpose. The Single-Family Residential (SF-12.0) district is designed to accommodate single-family residential development on roughly quarter-acre (¼-acre) lots. The district can be appropriately located near agricultural and single- family residential uses. This district implements the character and intent of the Comprehensive Plan's Suburban Living PlaceType.
(b) Uses. See Table 19: Use Table and all applicable regulations in Division 3.
(c) Dimensional Standards. Development in the Single-Family Residential (SF-12.0) district shall follow Table 5: Single-Family Residential (SF-12.0) District Dimensional Standards, as modified.

Table 5: Single-Family Residential (SF-12.0) District Dimensional Standards – Type C

Single-Family Residential (SF-12.0) District Dimensional Standards		
Lot Requirements		
A	Lot Area (min.)	12,000 square feet average 9,600 square feet minimum
B	Lot Width (min.) as measured at the front building setback line	80 feet
C	Lot Depth (min.)	120 feet
D	Lot Coverage (max.)	45%
Setback Requirements		
E	Front Yard (min.)	Garage - 25 feet House Face / Porch – 15 feet
F	Rear Yard (min.)	25 feet
G	Side Yard (min.)	8 feet
H	Corner Side Yard (min.)	15 feet
Building Requirements		
I	Building Height (max.)	35 feet
Additional Applicable Requirements within the Zoning Ordinance		
Sec. 9.04.041 – Dimensional Regulations Sec. 9.04.042 – Site Design Requirements Sec. 9.04.043 – Parking Sec. 9.04.044 – Loading Sec. 9.04.045 – Landscaping		Sec. 9.04.046 – Screening and Fencing Sec. 9.04.047 – Outdoor Lighting Sec. 9.04.048 – Trash Sec. 9.04.049 – Performance Standards

(d) Special Regulations.
(1) The Single-Family Residential (SF-12.0) district shall not be within 1,200 feet of a Major Highway as designated on the 2045 Master Thoroughfare Plan. This distance shall be measured from the

right-of-way centerline to the residential property line.

(2) The corner side yard for "key lots" shall meet the minimum front yard setback requirement.

(3) Average lot size will be calculated based upon the lots of the applicable type on the Final Plat and the average lot sizes will be noted on the lot size table.

D. Sec. 9.04.013 Single-Family Residential (SF-10.5) District (Type D Lot)

(a) Purpose. The Single-Family Residential (SF-10.5) district is designed to accommodate single-family residential development on relatively ample lots. The district can be appropriately located near agricultural and single-family residential uses. This district implements the character and intent of the Comprehensive Plan's Suburban Living PlaceType.

(b) Uses. See Table 19: Use Table and all applicable regulations in Division 3.

(c) Dimensional Standards. Development in Single-Family Residential (SF-10.5) district shall follow Table 6: Single- Family Residential (SF-10.5) District Dimensional Standards, as modified.

Table 6: Single-Family Residential (SF-10.5) District Dimensional Standards – Type D

Single-Family Residential (SF-10.5) District Dimensional Standards		
Lot Requirements		
A	Lot Area ~~(min.)~~	10,500 square feet average 8,400 square feet minimum
B	Lot Width (min.) as measured at the front building setback line	70 feet
C	Lot Depth (min.)	120 feet
D	Lot Coverage (max.)	55%
Setback Requirements		
E	Front Yard (min.)	Garage - 25 feet House face / Porch – 15 feet
F	Rear Yard (min.)	25 feet
G	Side Yard (min.)	8 feet
H	Corner Side Yard (min.)	15 feet
Building Requirements		
I	Building Height (max.)	35 feet
Additional Applicable Requirements within the Zoning Ordinance		
Sec. 9.04.041 – Dimensional Regulations Sec. 9.04.042 – Site Design Requirements Sec. 9.04.043 – Parking Sec. 9.04.044 – Loading Sec. 9.04.045 – Landscaping		Sec. 9.04.046 – Screening and Fencing Sec. 9.04.047 – Outdoor Lighting Sec. 9.04.048 – Trash Sec. 9.04.049 – Performance Standards

(d) Special Regulations.

(1) The Single-Family Residential (SF-10.5) district shall not be within 1,200 feet of a Major Highway as designated on the 2045 Master Thoroughfare Plan. This distance shall be measured from the right-of-way centerline to the residential property line.

(2) The corner side yard for "key lots" shall meet the minimum front yard setback requirement.

(3) Average lot size will be calculated based upon the lots of the applicable type on the Final Plat and the average lot sizes will be noted on the lot size table.

E. Sec. 9.04.014 Single-Family Residential (SF-8.4) District (Type E Lot)

(a) Purpose. The Single-Family Residential (SF-8.4) district is designed to accommodate single-family residential development on relatively ample lots. The district can be appropriately located near agricultural and single-family residential uses. This district implements the character and intent of the Comprehensive Plan's Suburban Living PlaceType.

(b) Uses. See Table 19: Use Table and all applicable regulations in Division 3.
(c) Dimensional Standards. Development in the Single-Family Residential (SF-8.4) district shall follow Table 7: Single-Family Residential (SF-8.4) District Dimensional Standards, as modified.

Table 7: Single-Family Residential (SF-8.4) District Dimensional Standards – Type E

Single-Family Residential (SF-8.4) District Dimensional Standards		
Lot Requirements		
A	Lot Area ~~(min.)~~	8,800 square feet average 8,400 square feet minimum
B	Lot Width (min.) as measured at the front building setback line	70 feet
C	Lot Depth (min.)	120 feet
D	Lot Coverage (max.)	55%
Setback Requirements		
E	Front Yard (min.)	Garage - 25 feet House Face / Porch – 15 feet
F	Rear Yard (min.)	20 feet
G	Side Yard (min.)	5 feet
H	Corner Side Yard (min.)	15 feet
Building Requirements		
I	Building Height (max.)	35 feet
Additional Applicable Requirements within the Zoning Ordinance		
Sec. 9.04.041 – Dimensional Regulations Sec. 9.04.042 – Site Design Requirements Sec. 9.04.043 – Parking Sec. 9.04.044 – Loading Sec. 9.04.045 – Landscaping		Sec. 9.04.046 – Screening and Fencing Sec. 9.04.047 – Outdoor Lighting Sec. 9.04.048 – Trash Sec. 9.04.049 – Performance Standards

(d) Special Regulations.
(1) The Single-Family Residential (SF-8.4) district shall not be within 1,200 feet of a Major Highway as designated on the 2045 Master Thoroughfare Plan. This distance shall be measured from the right-of-way centerline to the residential property line.
(2) The corner side yard for "key lots" shall meet the minimum front yard setback requirement.
(3) Average lot size will be calculated based upon the lots of the applicable type on the Final Plat and the average lot sizes will be noted on the lot size table.

F. Sec. 9.04.015 Single-Family Residential (SF-7.2) District (Type F Lot)

(a) Purpose. The Single-Family Residential (SF-7.2) district is designed to accommodate single-family residential development on relatively ample lots. The district can be appropriately located near agricultural and single- family residential uses. This district implements the character and intent of the Comprehensive Plan's Cluster Residential PlaceType.
(b) Uses. See Table 19: Use Table and all applicable regulations in Division 3.
(c) Dimensional Standards. Development in the Single-Family Residential (SF-7.2) district shall follow Table 8: Single-Family Residential (SF-7.2) District Dimensional Standards, as modified.

Table 8: Single-Family Residential (SF-7.2) District Dimensional Standards – Type F

Single-Family Residential (SF-7.2) District Dimensional Standards		
Lot Requirements		
A	Lot Area ~~(min.)~~	7,500 square feet average 7,200 square feet minimum
B	Lot Width (min.) as measured	60 feet

	at the front building setback line	
C	Lot Depth (min.)	120 feet
D	Lot Coverage (max.)	55%
Setback Requirements		
E	Front Yard (min.)	Garage - 25 feet House Face / Porch – 15 feet
F	Rear Yard (min.)	20 feet
G	Side Yard (min.)	5 feet
H	Corner Side Yard (min.)	15 feet
Building Requirements		
I	Building Height (max.)	35 feet
Additional Applicable Requirements within the Zoning Ordinance		
Sec. 9.04.041 – Dimensional Regulations Sec. 9.04.042 – Site Design Requirements Sec. 9.04.043 – Parking Sec. 9.04.044 – Loading Sec. 9.04.045 – Landscaping		Sec. 9.04.046 – Screening and Fencing Sec. 9.04.047 – Outdoor Lighting Sec. 9.04.048 – Trash Sec. 9.04.049 – Performance Standards

(d) Special Regulations.
(1) The Single-Family Residential (SF-7.2) district shall not be within 1,200 feet of a Major Highway as designated on the 2045 Master Thoroughfare Plan. This distance shall be measured from the right-of-way centerline to the residential property line.
(2) The corner side yard for "key lots" shall meet the minimum front yard setback requirement.
(3) Average lot size will be calculated based upon the lots of the applicable type on the Final Plat and the average lot sizes will be noted on the lot size table.

G. Sec. 9.04.016 Single-Family Residential (SF-6.0) District (Type G Lot)

(a) Purpose. The Single-Family Residential (SF-6.0) district is designed to accommodate single-family residential development on relatively smaller lots. The district can be appropriately located near agricultural and single- family residential uses. This district implements the character and intent of the Comprehensive Plan's Cluster Residential PlaceType.
(b) Uses. See Table 19: Use Table and all applicable regulations in Division 3.
(c) Dimensional Standards. Development in the Single-Family Residential (SF-6.0) district shall follow Table 9: Single-Family Residential (SF-6.0) District Dimensional Standards, as modified.

***Table 9: Single-Family* Residential (SF-6.0) District Dimensional Standards – Type G**

Single-Family Residential (SF-6.0) District Dimensional Standards		
Lot Requirements		
A	Lot Area ~~(min.)~~	6,300 square feet average 6,000 square feet minimum
B	Lot Width (min.) as measured at the front building setback line	50 feet
C	Lot Depth (min.)	100 feet
D	Lot Coverage (max.)	55%
Setback Requirements		
E	Front Yard (min.)	Garage - 25 feet House Face / Porch – 10 feet
F	Rear Yard (min.)	20 feet

G	Side Yard (min.)	5 feet
H	Corner Side Yard (min.)	15 feet
Building Requirements		
I	Building Height (max.)	35 feet
Additional Applicable Requirements within the Zoning Ordinance		
Sec. 9.04.041 – Dimensional Regulations Sec. 9.04.042 – Site Design Requirements Sec. 9.04.043 – Parking Sec. 9.04.044 – Loading Sec. 9.04.045 – Landscaping		Sec. 9.04.046 – Screening and Fencing Sec. 9.04.047 – Outdoor Lighting Sec. 9.04.048 – Trash Sec. 9.04.049 – Performance Standards

(d) Special Regulations.
(1) The Single-Family Residential (SF-6.0) district shall not be within 1,200 feet of a Major Highway as designated on the 2045 Master Thoroughfare Plan. This distance shall be measured from the right-of-way centerline to the residential property line.
(2) The corner side yard for "key lots" shall meet the minimum front yard setback requirement.
(3) Average lot size will be calculated based upon the lots of the applicable type on the Final Plat and the average lot sizes will be noted on the lot size table.

H. Sec. 9.04.017 Mixed-Density Residential (MD) District

(a) Purpose. The Mixed-Density Residential (MD) district provides medium-density residential development with diversified housing choices. This district encourages a mix of single-family and two-family residential uses and incentivizes community amenities to form compact, accessible, and walkable neighborhoods. This district implements the character and intent of the Comprehensive Plan's Urban Living PlaceTypes. The Mixed-Density District is defined on the Site to consist of four sub-types: Type H (40 Foot SF), Type I (Single Family Attached including invidual-lot townhome), Two-Family Dwelling (including individual-lot duplex), Type J (Garden Homes).
(b) Uses. See Table 19: Use Table and all applicable regulations in Division 3.
(c) Dimensional Standards. Development in the Mixed-Density Residential (MD) district shall follow Table 10: Mixed-Density Residential (MD) District Dimensional Standards, as modified.
(d) Special Regulations.
(1) The Mixed-Density Residential (MD) district shall not be within 1,200 feet of a Major Highway as designated on the 2045 Master Thoroughfare Plan. This distance shall be measured from the right-of-way centerline to the residential property line.
(2) The corner side yard for "key lots" shall meet the minimum front yard setback requirement.
(3) Zero lot line, 1'/9' split or 3'/7' split may be allowed as long as the overall building to building setback is 10 feet.
(4) Alley loaded garage setbacks (from the alley) shall be measured from the garage door to the edge of pavement of the alley or mews street. The distance shall be either 1) between 3 to 5 feet or 2) more than 20 feet.
(5) Second and third stories may extend a maximum of 2.5 feet into the rear yard setback.
(6) Average lot size will be calculated based upon the lots of the applicable type on the Final Plat and the average lot sizes will be noted on the lot size table.
(7) Any Mixed-Density Residential Unit shall:
- Have permanent foundations
- May utilize modular construction
- Not be manufactured or mobile homes with chassis and wheels

Table 10-A: Mixed-Density Residential (MD) District Dimensional Standards – Type H (40 Foot SF)

Mixed-Density Residential (MD) District Dimensional Standards **Type H (40 Foot SF)**

Lot Requirements		
A	Lot Area ~~(min.)~~	4,500 square feet average 4,000 square feet minimum
B	Lot Width (min.) as measured at the front building setback line	40 feet
C	Lot Depth (min.)	80 feet
D	Lot Coverage (max.)	65%
Setback Requirements		
E	Front Yard (min.)	10 feet
F	Rear Yard (min.)	10 feet
G	Side Yard (min.)	5 feet
H	Corner Side Yard (min.)	10 feet
I	Garage (min.)	25 feet, See Special Regulations Note
Building Requirements		
J	Building Height (max.)	40 feet
Additional Applicable Requirements within the Zoning Ordinance		
Sec. 9.04.041 – Dimensional Regulations Sec. 9.04.042 – Site Design Requirements Sec. 9.04.043 – Parking Sec. 9.04.044 – Loading Sec. 9.04.045 – Landscaping		Sec. 9.04.046 – Screening and Fencing Sec. 9.04.047 – Outdoor Lighting Sec. 9.04.048 – Trash Sec. 9.04.049 – Performance Standards

Table 10-B: Mixed-Density Residential (MD) District Dimensional Standards – Type I (Single-Family Attached – single DU on single lot including without limitation individual-lot townhome)

Mixed-Density Residential (MD) District Dimensional Standards **Type I (Single-Family Attached – single DU on single lot)**		
Lot Requirements		
A	Lot Area ~~(min.)~~	2,200 square feet average 2,000 square feet minimum
B	Lot Width (min.) as measured at the front building setback line	25 feet
C	Lot Depth (min.)	80 feet
D	Lot Coverage (max.)	75%
Setback Requirements		
E	Front Yard (min.)	10 feet
F	Rear Yard (min.)	10 feet
G	Side Yard (min.)	N/A
H	Corner Side Yard (min.)	10 feet
I	Garage (min.)	See Special Regulations Note
Building Requirements		
J	Building Height (max.)	40 feet
Additional Applicable Requirements within the Zoning Ordinance		
Sec. 9.04.041 – Dimensional Regulations Sec. 9.04.042 – Site Design Requirements Sec. 9.04.043 – Parking Sec. 9.04.044 – Loading Sec. 9.04.045 – Landscaping		Sec. 9.04.046 – Screening and Fencing Sec. 9.04.047 – Outdoor Lighting Sec. 9.04.048 – Trash Sec. 9.04.049 – Performance Standards

Table 10-C: Mixed-Density Residential (MD) District Dimensional Standards – Two-Family (single DU on single lot including without limitation individual-lot duplex)

Mixed-Density Residential (MD) District Dimensional Standards **Two-Family (single DU on single lot)**		
Lot Requirements		
A	Lot Area ~~(min.)~~	4,400 square feet average 4,000 square feet minimum
B	Lot Width (min.) as measured at the front building setback line	50 feet
C	Lot Depth (min.)	80 feet
D	Lot Coverage (max.)	75%
Setback Requirements		
E	Front Yard (min.)	10 feet
F	Rear Yard (min.)	10 feet
G	Side Yard (min.)	N/A
H	Corner Side Yard (min.)	10 feet
I	Garage (min.)	See Special Regulations Note
Building Requirements		
J	Building Height (max.)	40 feet
Additional Applicable Requirements within the Zoning Ordinance		
Sec. 9.04.041 – Dimensional Regulations Sec. 9.04.042 – Site Design Requirements Sec. 9.04.043 – Parking Sec. 9.04.044 – Loading Sec. 9.04.045 – Landscaping		Sec. 9.04.046 – Screening and Fencing Sec. 9.04.047 – Outdoor Lighting Sec. 9.04.048 – Trash Sec. 9.04.049 – Performance Standards

Table 10-D: Mixed-Density Residential (MD) District Dimensional Standards – Type J (Garden Homes – single DU on single lot)

Mixed-Density Residential (MD) District Dimensional Standards **Type J (Garden Homes – single DU on single lot)**		
Lot Requirements		
A	Lot Area ~~(min.)~~	3,300 square feet average 2,800 square feet minimum
B	Lot Width (min.) as measured at the front building setback line	60 feet
C	Lot Depth (min.)	50 feet
D	Lot Coverage (max.)	60%
Setback Requirements		
E	Front Yard (min.)	10 feet (5 feet to property line between units, i.e. 10 feet overall between units)
F	Rear Yard (min.)	10 feet (5 feet to property line between units, i.e. 10 feet overall between units)
G	Side Yard (min.)	5 feet
H	Corner Side Yard (min.)	10 feet
I	Garage (min.)	25 feet (only if facing City Street)
Building Requirements		
J	Building Height (max.)	40 feet

Additional Applicable Requirements within the Zoning Ordinance	
Sec. 9.04.041 – Dimensional Regulations Sec. 9.04.042 – Site Design Requirements Sec. 9.04.043 – Parking Sec. 9.04.044 – Loading Sec. 9.04.045 – Landscaping	Sec. 9.04.046 – Screening and Fencing Sec. 9.04.047 – Outdoor Lighting Sec. 9.04.048 – Trash Sec. 9.04.049 – Performance Standards

I. Single-Family Residential (Cottage Home District)

(a) Purpose. The Single-Family Cottage Residential district is designed to accommodate a single-family residential development of detached units on individual lots. The Cottage homes are intended to be situated adjacent to a shared open space. The district can be appropriately located near agricultural, commercial, and single-family residential uses. This district implements the character and intent of the Comprehensive Plan's Estate Residential PlaceType.

(b) Development in Single-Family Residential (Cottage Home District) requires Site Plan approval to ensure conformance with city development standards.

(c) Dimensional Standards. Development in the Cottage Home district shall follow the Dimensional Standards, as modified.

Single-Family Cottage Residential District Dimensional Standards

Single-Family Cottage Residential District Dimensional Standards		
Lot Requirements		
A	Lot Area (min.)	1,800 SF
B	Building Separation (min.)	10 feet
C	Lot Depth (min.)	45 feet
D	Lot Coverage (max.)	N/A
Setback Requirements		
E	Front Yard (min.)	5 feet
F	Rear Yard (min.)	10 feet
G	Side Yard (min.)	5 feet
H	Corner Side Yard (min.)	10 feet
Building Requirements		
I	Building Height (max.)	40 feet
Additional Applicable Requirements within the Zoning Ordinance		
Sec. 9.04.041 – Dimensional Regulations Sec. 9.04.042 – Site Design Requirements Sec. 9.04.045 – Landscaping		Sec. 9.04.046 – Screening and Fencing Sec. 9.04.047 – Outdoor Lighting Sec. 9.04.048 – Trash Sec. 9.04.049 – Performance Standards

(d) Special Regulations.

(1) Cottage homes shall provide 1.75 parking spots per unit which can be provided as off-street parking and/or on-street parking.

(2) Not be manufactured or mobile homes with chassis and wheels Zero lot line

(3) 1'/9' split or 3'/7' split may be allowed as long as the overall building to building setback is 10 feet.

(4) Any Single-Family Cottage Residential Unit shall:

- Have permanent foundations
- May utilize modular construction
- Not be manufactured or mobile homes with chassis and wheels

J. Sec. 9.04.018 Multifamily Residential (MF) District

(a) Purpose. The Multifamily Residential (MF) District provides for high-density residential development, targeting well-designed multifamily uses serving as a transition between medium-density residential development and commercial nodes. This district encourages multifamily uses with site development characteristics that accommodate open space and access to light and air. This district implements the character and intent of the comprehensive plan's urban living place type.

(b) Uses. See Table 19: Use Table and all applicable regulations in division 3.

(c) Dimensional Standards. Development in the Multifamily Residential (MF) District shall follow Table 11: Multifamily Residential (MF) District Dimensional Standards, as modified.

(d) For the avoidance of doubt, MF District includes the following uses if multiple dwelling units are located on a single lot: Townhome Unit, Duplex Unit, Cottage Home Unit and Condominium Unit.

Table 11: Multifamily Residential (MF) District Dimensional Standards

Multifamily Residential (MF) District Dimensional Standards		
Lot Requirements		
A	Lot Area (min.)	5,000 square feet
B	Lot Width (min.)	50 feet
C	Lot Depth (min.)	120 feet
D	Lot Coverage (max.)	N/A
Setback Requirements		
E	Front Yard (min.)	10 feet
F	Rear Yard (min.)	10 feet
G	Side Yard (min.)	10 feet
H	Corner Side Yard (min.)	25 feet
Building Requirements		
J	Building Height (max.)	85 feet
Additional Applicable Requirements within the Zoning Ordinance		
Sec. 9.04.041 – Dimensional Regulations Sec. 9.04.042 – Site Design Requirements Sec. 9.04.043 – Parking Sec. 9.04.044 – Loading Sec. 9.04.045 – Landscaping		Sec. 9.04.046 – Screening and Fencing Sec. 9.04.047 – Outdoor Lighting Sec. 9.04.048 – Trash Sec. 9.04.049 – Performance Standards

(e) Special Regulations.

(1) Minimum lot areas for attached single-family and two-family dwellings shall be 2,400 square feet per dwelling unit.

(2) Lot widths for a lot containing attached single-family and two-family dwellings shall be no less than 20 feet per ground floor unit plus side yard requirements.

(3) No lot containing multifamily dwelling units shall contain less than 10,000 square feet.

(4) No lot containing a single-unit or duplex unit park shall contain less than 20,000 square feet.

(5) No building in a single-unit or duplex unit park, attached single-family dwelling, two-family dwelling, or townhome unit shall exceed a height of 40 feet.

(6) Any building with multiple stories and greater than 40 feet tall shall comply with the regulations specified in section 9.04.041(h).

(7) When a multifamily dwelling exceeds one story in height, an automatic sprinkler system shall be installed in accordance with existing fire codes and each building shall have two points of entry or exit.

(8) The maximum density for a multifamily dwelling is 100 units per acre.

(9) The maximum density for a townhome unit or single-unit or duplex unit park is 18 units per acre

(10) The corner side yard for "key lots" shall meet the minimum front yard setback requirement.

(11) Any Townhome Unit, Cottage Home Unit, Condominium Unit or Duplex Unit shall:

- Have permanent foundations
- May utilize modular construction

- Not be manufactured or mobile homes with chassis and wheels

(12) A Multi-Family development, including Townhome Unit, Cottage Home Unit, Condominium Unit, and Duplex Unit projects, may choose to satisfy the open space requirements as currently detailed in 9.04.029(c)(b) or may choose to provide open space equal to 15% of the gross development acreage which can be met with one or more of the following options:

- Usable open space and landscape buffers which can include floodplain at no greater slope than 4:1 shall receive a 1:1 square foot credit. Trails and other improvements can be collocated within the usable open space/landscape buffers and shall receive the credit as noted in the following bullets.
- Hardscape improved areas such as equipped children's play areas, pool/spa, dog park, trails, and other similar improvements shall receive 3:1 square footage credit
- Amenities such as amenity centers, gym facilities, and other similar amenities shall receive 3:1 square footage credit

OFT

K. Sec. 9.04.020 Regional Commercial (C-2) District

(a) Purpose. The Regional Commercial (C-2) District provides for medium- to large-scale development of retail, service, entertainment, and office necessary for a regional market. This district primarily facilitates commercial development, like big box and anchor retailers and intensive shopping strip centers that are automobile-oriented and generate high traffic counts. This district implements the character and intent of the comprehensive plan's regional activity center place type.

(b) Uses. See Table 19: Use Table and all applicable regulations in division 3.

(c) Dimensional Standards. Development in the Regional Commercial (C-2) District shall follow Table 13: Regional Commercial (C-2) District Dimensional Standards, as modified.

Table 13: Regional Commercial (C-2) District Dimensional Standards

Regional Commercial (C-2) District Dimensional Standards		
Lot Requirements		
A	Lot Area (min.)	10,000 square feet
B	Lot Width (min.)	60 feet
C	Lot Depth (min.)	N/A
D	Lot Coverage (max.)	N/A
Setback Requirements		
E	Front Yard (min.) (Conventional Context)	25 feet
	Front Yard BTZ (Walkable Context)	0-10 feet
F	Rear Yard (min.)	10 feet
G	Side Yard (min.)	5 feet
H	Corner Side Yard (min.)	15 feet
Building Requirements		
J	Building Height (max.)	85 feet
Additional Applicable Requirements within the Zoning Ordinance		
Sec. 9.04.041 – Dimensional Regulations Sec. 9.04.042 – Site Design Requirements Sec. 9.04.043 – Parking Sec. 9.04.044 – Loading Sec. 9.04.045 – Landscaping		Sec. 9.04.046 – Screening and Fencing Sec. 9.04.047 – Outdoor Lighting Sec. 9.04.048 – Trash Sec. 9.04.049 – Performance Standards

(d) Special Regulations.

(1) Any building with multiple stories and greater than 35 feet tall shall comply with the regulations specified in section 9.04.041(h)

(2) Bar Separation Standard. With respect to Regional Commercial (C-2) and Mixed Use (MU): Section 9.04.032(b)(3)(A) shall be amended to provide for no more restrictions than applicable state law.

(3) Section 9.04.032(b)(3)(B) shall not apply to Zone III.

(4) Front Yard Setbacks may follow one of two contexts: Conventional Context and Walkable Context.

- Conventional Context: Allows for a deeper setback or parking between the front property line and the building, in which case the minimum front yard setback shall be a minimum of twenty-five (25) feet.
- Walkable Context: Allows for a walkable streetscape where buildings front on a minimum eight (8) foot wide sidewalk, in which case the Build-To-Zone shall be between zero (0) and ten (10) feet.

L. Mixed-Use Nodes ("Sherley Squares")

(a) Purpose. The four permitted Mixed-Use Nodes are intended to provide amenities and services at the neighborhood scale. Retail located within these areas should be responsive to its residential context. The Mixed-Use Nodes shall be located on sites not more than two acres, with a building height maximum of two stories and separated by 1,000 feet from another Mixed-Use Node.

(b) Uses. Permitted uses shall include the uses from the Local Commercial (C-1) District.

(c) Dimensional Standards. Development in the Mixed-Use Nodes District shall follow the following Dimensional Standards.

Mixed Use Nodes (Sherley Squares) Criteria

Mixed-Use Nodes District Dimensional Standards		
Lot Requirements		
A	Lot Area (min.)	N/A
B	Lot Width (min.)	25 feet
C	Lot Depth (min.)	N/A
D	Lot Coverage (max.)	N/A
Setback Requirements		
E	Front Yard (min.) (Conventional Context)	25 feet
	Front Yard BTZ (Walkable Context)	0-10 feet
F	Rear Yard (min.)	15 feet
G	Side Yard (min.)	5 feet
H	Corner Side Yard (min.)	10 feet
Building Requirements		
I	Frontage Buildout (min.)	50%
J	Building Height (max.)	40 feet
Additional Applicable Requirements within the Zoning Ordinance		
Sec. 9.04.041 – Dimensional Regulations Sec. 9.04.042 – Site Design Requirements Sec. 9.04.043 – Parking Sec. 9.04.044 – Loading Sec. 9.04.045 – Landscaping		Sec. 9.04.046 – Screening and Fencing Sec. 9.04.047 – Outdoor Lighting Sec. 9.04.048 – Trash Sec. 9.04.049 –Performance Standards

(d) Special Regulations.

- Bar Separation Standard. Mixed Use (MU): Section 9.04.032(b)(3)(A) shall be amended to provide for no more restrictions than applicable state law. Front Yard Setbacks may follow one of two contexts: Conventional Context and Walkable Context.
  - Conventional Context: Allows for a deeper setback or parking between the front property line and the building, in which case the minimum front yard setback shall be a minimum of twenty-five (25) feet.
  - Walkable Context: Allows for a walkable streetscape where buildings front on a minimum eight (8) foot wide sidewalk, in which case the Build-To-Zone shall be between zero (0) and ten (10) feet.

SECTION 7. SITE DESIGN REQUIREMENTS

A. Revise Sec. 9.04.042 Site Design Requirements to read:

(a) Purpose. The purpose of this Section is to establish minimum standards for the appearance of development and corresponding site elements that are recognized as enhancing property values and that are in the interest of the general welfare of the City.

(b) Applicability. This section applies to all single-family, two-family, multi-family, mixed-use, and non-residential developments for new construction. All development shall comply with the requirements established by the Anna Fire Marshal.

(c) **Single-Family Residential Standards**. Residential structures in Zones I & II shall conform to the following residential design standards.

(1) **FOR LOT TYPES A (1/2 acre lots), B (100' lots), C (90' lots) and D (80' lots):**

i. The exterior facades of a main building or structure, excluding glass windows and doors, shall be constructed of seventy-five percent (75%) brick, stone or stucco. Cementitious fiber board is considered masonry, but may only constitute fifty percent (50%) of the area for stories other than the first story. Cementitious fiber board may also be used for architectural features, including window box-outs, bay windows, roof dormers, garage door headers, columns, and chimneys. Cementitious fiber board may also be used for other architectural features as approved by the Director of Development Services.

ii. To promote architectural variety, a maximum of 25% of the homes on lot types A, B, C and D may have up to 100% cementitious fiberboard ("Craftsman Style" homes) so long as the following conditions are met:

- Wrap around covered porches are provided on the first floor that total a minimum of 150 square feet.
- No more than two (2) paint colors may be used on the exterior of the house and they must be earth tones that complement each other (main house vs. trim)
- The surface area of windows surrounded completely by brick may be included within the computation of the exterior brick, brick veneer, stone, or stone veneer wall area of a residence.

(2) **FOR LOT TYPES E (70' lots), F (60' lots), G (50' lots), H (40' lots):**

i. The exterior facades of a main building or structure, excluding glass windows and doors, shall be constructed of fifty percent (50%) brick, stone or stucco. Cementitious fiber board is considered masonry, but may only constitute fifty percent (50%) of the area for stories other than the first story. Cementitious fiber board may also be used for architectural features, including window box-outs, bay windows, roof dormers, garage door headers, columns, and chimneys. Cementitious fiber board may also be used for other architectural features as approved by the Director of Development Services.

ii. To promote architectural variety, a maximum of 35% of the homes on lot types E, F, G and H may have up to 100% cementitious fiberboard ("Craftsman Style" homes) so long as the following conditions are met:

- Wrap around covered porches are provided that total a minimum of 150 square feet.
- No more than two (2) paint colors may be used on the exterior of the house and they must be earth tones that complement each other (main house vs. trim)
- The surface area of windows surrounded completely by brick may be included within the computation of the exterior brick, brick veneer, stone, or stone veneer wall area of a residence.

(3) **Address Plaque**. An address plaque or numbers made of cast stone, metal or other materials used on the exterior of the home of a size that meets Town fire code is required for each Lot.

(4) **Chimneys**. All exposed portions of the fire breast, flu and chimney shall be clad in cementitious lap siding, brick, stone or stucco. Chimneys located on an exterior wall must be 100% brick or stone.

(5) **EIFS**. EIFS (Exterior Insulating and Finish Process) is not allowed.

(6) **Windows**.

i. All window framing shall be bronzed, cream, sand or white anodized aluminum, vinyl or wood.

ii. Window shutters may be used. Window shutters shall be painted, stained wood, or fiberglass.

iii. No reflective window coverings or treatments shall be permitted.

(7) **Garage Doors.** Garage doors shall be constructed of either metal or wood.

(8) **Accessory Structures.** Accessory structures shall be subject to the same exterior construction and architectural standards as the main dwelling.

(9) **Placement of exterior materials.** Notwithstanding the minimum and maximum percentages of building materials allowed on residential homes (shown above), any break from one material to another shall follow the natural lines and design features of the architectural plan. A change from one material to another cannot be arbitrarily assigned without consideration of the specific façade for which it is designed. The Director of Development Services shall have final approval of any residential elevation submitted for construction.

(10) **Alternate stucco architecture**. If a home is designed with a specific architectural style that warrants the use of stucco as the primary exterior material, including but not limited to Mediterranean, Spanish, Southwest, or Modern, then the use of stucco as the primary or exclusive material may be approved by the Director in lieu of other exterior material standards. All elements of the architectural style must be incorporated, including but not limited to clay roof tiles, typical of the style. Residences with primarily stucco finishes shall be accented with heavy wood beams, stonework, or other features to enhance the style. Elevations with no discernable style that simply disregard the required masonry requirement will not be considered. Only three-step stucco (or its equivalent) is allowed.

(11) **Building Articulation.** At least four facade articulation techniques are required on each single-family dwelling to add variety and interest to a building. The following features are acceptable techniques of exterior articulation.

(A) One of the following:

- A base course or plinth course;
- Banding, moldings, or stringcourses;
- Quoins;
- Oriels;
- Cornices;
- Arches;
- Balconies;
- Brackets;
- Shutters;
- Keystones;
- Dormers; or
- Louvers as part of the exterior wall construction. (Quoins and banding shall wrap around the corners of the structure for at least two feet.)
- Carriage style garage doors
- Decorative brick patterning
- Architectural pillars or posts
- Bay Window facing the street
- Brick or Stone chimney on the exterior wall
- Stone Accents
- Covered front porches (minimum (60) square feet covered by main roof or an architectural extension) May encroach into the front setback up to ten feet (10') provided there is a minimum five feet (5') of the front yard space from the back of sidewalk to the front facing façade of the porch. Minimum porch depth is five feet (5').
- Cupulas or turrets
- Dormers or gables
- Roof accent upgrades (e.g. metal, tile, slate, solar tiles)
- Recessed entries a minimum of three (3) feet deeper than main front façade
- Greater than 8:12 primary roof pitch, or variable roof pitches
- Transom windows
- Shutters
- Masonry Arches
- Mixed Masonry patterns
- Coach lights at entrances

- Decorative attic or gable feature, minimum two (2) square feet in size (e.g. vent, window, brick detail)
- Decorative driveway paving (e.g. salt finish, exposed aggregate, or other treatments approved by City Building Official)

(B) Horizontal banding continues the length of the wall that faces a street or other similar highly visible areas.

(C) Front porch of at least 50 square feet.

(D) The installation of at least two (2) coach lights.

(E) Other techniques for building articulation can be substituted if approved by the Director.

(12) **Roof Treatment** ~~Except for porch roofs and shed roofs, pitched roofs shall have a minimum slope of 6" x 12" (six inches vertical rise for every 12 inches horizontal run) and shall have an overhang at least 1' (one foot) beyond the building wall. Porch roofs and shed roofs must have a minimum pitch of 4" x 12".~~

(A) Structures constructed on all lots shall have a composition, slate, metal, clay tile or cement/concrete tile roof.

(B) The color of the composition roof must appear to be weathered wood shingles, black or slate, unless such other color is approved by the Director of Development Services.

(C) Composition roof shingles must be laminated and have a minimum warranty of 30 years.

(D) The main roof pitch of visible roofs shall have a minimum slope of 6" in 12", exclusive of secondary roofs that include patios, porches, bay windows and other features that are accents of the structure and not part of the main roof. Clay tile and cement/concrete tile roofs shall have a minimum slope of 3" in 12". Pitch ends shall be 100% guttered.

(E) Flat or negligible slope roofs are permitted.

(13) **Fenestration.** Windowless exterior elevations that face a public right-of-way or other similar highly visible areas are prohibited. On two-story structures, windows are required on the first and second stories facing a public right-of-way.

(14) **Garages.**

(A) On front entry garages, the face of a garage shall not:

i. Extend more than ten feet beyond the remainder of the front elevation of the primary living area of a dwelling; or

ii. Be over 60% of the total frontage width of a dwelling. Porches or columns are not considered part of the front elevation of the primary living area.

(B) Front Loaded Garages:

i. Minimum: 2-car garage

ii. Maximum: 5-car garage

iii. Garage Doors Facing Street: No more than 3 single-loaded doors are allowed to face the street. Any third street facing garage door must be recessed a minimum of three feet (3') from other garage doors.

iv. One Double Garage Door and One Single Garage Door allowed.

v. Three single garage doors; single garage door nearest to the adjacent side yard must be recessed a minimum of three feet (3') from other garage doors.

vi. Construction Material: Painted Metal, Wood, or Fiberglass

vii. Prohibited: Carports

viii. Exceptions: Tandems are allowed

(C) Rear Loaded Garages:

i. Minimum: 2-car garage

ii. Maximum: 3-car garage tandem

iii. Garage Doors Facing Alley: No more than 2 single-loaded doors or 1 double-loaded door

iv. Construction Material: Painted Metal, Wood, or Fiberglass

v. Prohibited: Carports

vi. Exceptions: Tandems are allowed

(15) **House Repetition / Plan Spacing.**

(A) Same Plan and same elevation can be repeated on the same side of the street every fourth (4th) Lot (see A)

(B) Same Plan and same elevation cannot be repeated across the street or diagonal from any other plan (see B)

(C) Different plan with elevations considered the "same as" another plan and elevation on the same side of the street can be repeated third lot (see E)

(D) Different plan with elevations considered the "same as" another plan and elevation cannot be repeated across the street or diagonal from another plan (see F)

(E) Where a street ends in a cul-de-sac, each dwelling fronting the cul-de-sac shall have a different elevation.

Plan	Elevation	Street Side	# of Lots Between	Key
Same	Same	Same	3	A
Same	Same	Opposite	2	B
Same	Different	Same	2	C
Same	Different	Opposite	1	D
Different	Considered Same As	Same	2	E
Different	Considered Same As	Opposite	1	F

A	D	F	B	A			
F		C	D	E	C	B	E

Notes:

1) The repetition requirements only apply to single family detached units and the street facing units of a Garden Home cluster.
2) Documentation of lot repetition tracking shall be available from the Developer upon request from the City of Anna for verification as-needed.

(d) **Single-Family Attached (including without limitation individual-lot townhome), Garden Home, Two-Family Dwelling (including without limitiaton individual-lot duplex) and Cottage Home Standards**

(1) **FOR LOT TYPES I (Single-Family Attached), J (Garden Homes), Two-Family Dwelling and Cottage Homes:**

i. The exterior facades of a main building or structure, excluding glass windows and doors, shall be constructed of fifty percent (50%) brick, stone or stucco. Cementitious fiber board is considered masonry, but may only constitute fifty percent (50%) of the area for stories other than the first story. Cementitious fiber board may also be used for architectural features, including window box-outs, bay windows, roof dormers, garage door headers, columns, and chimneys. Cementitious fiber board may also be used for other architectural features as approved by the Director of Development Services.

ii. To promote architectural variety the Garden Homes and Cottage Homes may have up to 100% cementitious fiberboard ("Craftsman Style" homes) so long as the following conditions are met:

- Covered porches are provided that total a minimum of 150 square feet.
- No more than two (2) paint colors may be used on the exterior of the house and they must be earth tones that complement each other (main house vs. trim)
- The surface area of windows surrounded completely by brick may be included within the computation of the exterior brick, brick veneer, stone, or stone veneer wall area of a residence.

(2) Building Articulation. At least two facade articulation techniques are required on each detached or attached residential dwelling unit to add variety and interest to a building. The following features are acceptable techniques of exterior articulation.

(A) One of the following:

- A base course or plinth course;
- Banding, moldings, or stringcourses;
- Quoins;
- Oriels;
- Cornices;
- Arches;
- Balconies;

- Brackets;
- Shutters;
- Keystones;
- Dormers; or
- Louvers as part of the exterior wall construction. (Quoins and banding shall wrap around the corners of the structure for at least two feet.)
- Carriage style garage doors
- Decorative brick patterning
- Architectural pillars or posts
- Bay Window facing the street
- Brick or Stone chimney on the exterior wall
- Stone Accents
- Covered front porches (minimum (60) square feet covered by main roof or an architectural extension) May encroach into the front setback up to ten feet (10') provided there is a minimum five feet (5') of the front yard space from the back of sidewalk to the front facing façade of the porch. Minimum porch depth is five feet (5').
- Cupulas or turrets
- Dormers or gables
- Roof accent upgrades (e.g. metal, tile, slate, solar tiles)
- Recessed entries a minimum of three (3) feet deeper than main front façade
- Greater than 8:12 primary roof pitch, or variable roof pitches
- Transom windows
- Shutters
- Masonry Arches
- Mixed Masonry patterns
- Coach lights at entrances
- Decorative attic or gable feature, minimum two (2) square feet in size (e.g. vent, window, brick detail)
- Decorative driveway paving (e.g. salt finish, exposed aggregate, or other treatments approved by City Building Official)

(B) Horizontal banding continuing the length of the wall that faces a street, or other similar highly visible areas.

(C) Front porch of at least 50 square feet.

(D) The installation of at least two (2) coach lights.

(E) Other techniques for building articulation can be substituted if approved by the Director.

~~Roof Treatment. Except for porch roofs and shed roofs, pitched roofs shall have a minimum slope of 6" x 12" (six inches vertical rise for every 12 inches horizontal run) and shall have an overhang at least 1' (one foot) beyond the building wall. Porch roofs and shed roofs must have a minimum pitch of 4" x 12".~~

(3) Fenestration. Windowless exterior elevations facing a public right-of-way or other highly visible areas are prohibited. On two-story structures, windows are required on the first and second stories facing a public right-of-way.

(4) Garages.

(A) On front entry garages, the face of a garage shall not:

i. Extend more than ten feet beyond the remainder of the front elevation of the primary living area of a dwelling; or

ii. Be over 60% of the total frontage width of a dwelling. Porches or columns are not considered part of the front elevation of the primary living area. Two-Family Dwelling and Duplex Units are exempted from this requirement.

(B) Where used Front Loaded Garages shall meet the following standards:

i. Minimum: 1-car garage

ii. Construction Material: Painted Metal, Wood, or Fiberglass

iii. Exceptions: Tandems Garages are allowed. Carports in the rear of the structure are allowed.

(C) Where used Rear Loaded Garages shall meet the following standards:

i. Minimum: 1-car garage

ii. Garage Doors Facing Alley: No more than 2 single-loaded doors or 1 double-loaded door

iii. Construction Material: Painted Metal, Wood, or Fiberglass

iv. Exceptions: Tandems Garages are allowed. Carports in the rear of the structure are allowed. Cottage Homes are not required to have an attached garage.

(5) Unit Repetition.

(A) Single family detached dwelling units with substantially identical exterior elevations can only repeat every four (4) units when fronting the same right-of-way, fire lane, or easement, including both sides of that right-of-way, fire lane, or easement as approved by Developers and secondary review by City as a part of building permit review.

(B) Single family detached dwelling units side by side or across each other within one unit (directly across or "caddy corner") shall not have substantially identical exterior elevations.

(C) The repetition requirements only apply to single family detached units and the street facing units of a Garden Home cluster, Two-Family Dwelling, and Duplex Units, and Cottage Homes and Cottage Home Units, not Single-Family Attached or Townhome Units

(D) For Two-Family Dwelling and Duplex Units and Cottage Homes and Cottage Home Units, project covenants will require (i) a variation in facade articulation (e.g., locations of porches, entrances, and recessed elevations) between immediately adjacent buildings, and (ii) that dwelling units with substantially identical exterior elevations can repeat only once every three (3) units when fronting the same street as approved by Developers and secondary review by City as a part of building permit review.

(E) For Single-Family Attached and Townhome Units project covenants will require a variation in exterior colors or materials between immediately adjacent buildings without requiring different elevations.

(e) **Nonresidential Standards.**

(1) Building Articulation.

(A) The front and two sides of all buildings shall utilize facade offsets and appropriate fenestration to add variation and visual interest to an elevation and to break up long uninterrupted walls or elevations.

(B) Elevations that are 60 ~~50~~ feet or longer in horizontal length require at least one ~~two~~ offset (projection or recess) from the primary facade plane of at least 18 inches deep and 4 feet wide.

(C) The height of those offsets is equal to the building's height at the location of the offset.

(2) Roof Treatment.

(A) Long uninterrupted roof lines and planes shall be broken into smaller segments through the use of scaled gables or dormers, changes in height, changes in roof form, type or planes that typically correspond to offsets in the building's facade, or other appropriate architectural elements.

(B) Parapet roof lines shall feature a well-defined cornice treatment or another similar element to visually cap each building elevation.

(3) Fenestration.

(A) The use of recessed windows, awnings, sills, drip caps, projecting trim casings or surrounds, projecting muntins or mullions, and other elements is generally required.

(B) Any glass with a visible light reflectance rating of 25% or greater is prohibited.

(4) Elements. All buildings or developments shall be required to provide at least two of the following elements:

(A) The primary entrance for all buildings shall feature a protected entry through the use of a recessed entry, porte-cochere, awning, canopy, or similar feature that serves the same purpose. The covering shall be at least three feet in depth when measured from the face of the adjoining facade.

(B) The front and two sides of all building elevations shall feature at least one facade offset (recess or projection) of at least five feet in depth for every 60 ~~50~~ feet of horizontal length.

(C) All primary and secondary building entrances, excluding emergency exits and service doors, feature a recessed entry, canopy, awning, or similar sheltering feature ~~of at least 50 square feet~~.

(f) **Mixed-Use Standards**

(1) Building Articulation.

(A) Buildings facing a local street shall utilize facade offsets and appropriate fenestration to add variation and visual interest to an elevation and to break up long uninterrupted walls or elevations.

(B) Elevations 50 feet or longer in horizontal length require at least two offsets (projection or recess) from the primary facade plane of at least 18 inches deep and 4 feet wide.

(C) The height of those offsets is equal to the building's height at the location of the offset.

(D) Columns and piers shall be spaced no farther apart than the height of the column or pier.

(2) Roof Treatment.

(A) Long uninterrupted roof lines and planes shall be broken into smaller segments through the use of scaled gables or dormers, changes in height, changes in roof form, type or planes that typically correspond to offsets in the building's facade, or other appropriate architectural elements. [Discuss]

(B) Parapet roof lines shall feature a well-defined cornice treatment or another similar element to visually cap each building elevation.

(C) Mansard roofs are prohibited.

(3) Fenestration.

(A) The use of recessed windows, awnings, sills, drip caps, projecting trim casings or surrounds, projecting muntins or mullions, and other elements is required.

(B) Any glass with a visible light reflectance rating of 25% or greater is prohibited.

(4) Ground Floor.

(A) A mixed-use ~~development's ground or first floor is reserved for commercial uses, such as retail, office, and restaurant uses.~~ development shall have ground or first floor frontage and access reserved for commercial uses, such as retail, office, and restaurant uses. Partial use of the first floor for residential, and upper floor use of building for commercial, retail, office, and restaurant is at the discretion of the applicant.

(B) For those mixed-use developments incorporating live-work units, the first floor may be shared with residential and commercial uses.

(C) The ground floor shall have a minimum ceiling height of 14 feet if contains commercial.

(5) Elements. All buildings or developments shall be required to provide at least two of the following elements:

(A) The primary entrance for all buildings shall feature a protected entry through the use of a recessed entry, porte-cochere, awning, canopy, or similar feature that serves the same purpose. The covering shall be at least three feet in depth when measured from the face of the adjoining facade.

(B) All building elevations shall feature at least two facade offsets (recess or projection) of at least five feet in depth for every 50 feet of horizontal length.

(C) All building elevations shall feature at least three distinct roof lines.

(D) All primary and secondary building entrances, excluding emergency exits and service doors, feature a recessed entry, canopy, awning, or similar sheltering feature of at least 50 square feet.

(E) Other similar architectural features as approved by the Director.

(6) Amenities.

(A) A mixed-use development shall provide a minimum of two amenities.

(B) The amenities below may be used to fulfill the requirements. Each amenity counts as one required amenity towards the requirements; however, multiples of the same amenity do not count towards the requirements. Additionally, to provide flexibility in development design, the Director may approve different amenities that agree with the purpose of this Sec. 9.04.042.

(i) Swimming pool (minimum 850 square foot surface area) with cooling deck (minimum ten feet wide in all areas);

(ii) Jacuzzi or hot tub area (minimum 50 square foot area);

(iii) At least two barbeque grills or one grill per 100 units, whichever is greater, with shaded seating areas, all barbeque grills shall be:

a. Serviced with propane or other gas, and

b. Be built into a structure incorporated into an adjacent amenity (i.e., pool or seating area)

(iv) Ramada(s), arbor(s), and/or trellis(es) covering at least 1,000 square feet of recreation space;
(v) A dog park that is at least 5,000 square feet in area that:
  a. Is enclosed by a minimum five-foot tall vinyl-coated chain link fence;
  b. Uses grass, wood chips, or a combination of the two as surface materials; and
  c. Provides at least one dog waste station that includes a bag dispenser and waste receptacle installed along the perimeter of the enclosure for every 2,500 square feet of the associated dog park.
(vi) Fitness center/weight room (minimum 500 square feet);
(vii) Business center (minimum 500 square feet); (viii)Media room (minimum 500 square feet).
(viii) A Plaza with hardscape features at least 3,000 square feet in area that is designed for use by, and to complement, the ground floor mixed-use
(ix) A civic center or other publicly accessible facility (e.g., reading room)

SECTION 8. ZONING LANDSCAPING CHANGES

Revise 9.04.045 Landscaping to read:

(1) Residential Development.
  (A) Generally.
    (i) Applicants are required to plant the amount established in Table 27: Residential Planting Requirements per lot prior to obtaining a certificate of occupancy.
    (ii) Existing quality trees of at least three-inch caliper size located on the lot shall count to meet this standard if appropriate tree protection measures have been followed.
  (B) Requirements.
    (i) Trees selected from the canopy tree list in this Section shall be planted on all single-family and two-family lots.
    (ii) At least one of the trees must be placed in the front yard of the lot. A street tree shall be considered a front yard tree.
    (iii) For all residential properties, common areas, and open space lots, applicants are required to plant one canopy tree per 40 linear feet of street frontage. Trees may be grouped or clustered to facilitate site design.
    (iv) The following minimum standards apply as established in Table 27: Residential Planting Requirements. An applicant shall choose one of three planting options. An applicant may plant the required canopy trees, ornamental trees, or a combination of canopy and ornamental trees specified in Table 27: Residential Planting Requirements. If a street tree agreement is in place then those trees will count towards the totals in Table 27:Residential Planting Requirements. Street trees may be canopy trees. To accommodate modified Mixed-Density Residential types the requirement shall follow the following standards:
      a. Garden Homes: One canopy tree per unit for homes not fronting on the street. Street fronting units shall utilize the street tree to meet the yard tree requirement.
      b. Two-Family Dwelling: One tree per two attached Two-Family units shall satisfy the Two-Family front yard planting requirement.
      c. Cottage Homes: One canopy tree or one ornamental tree for every two units.
      d. Single-Family Attached: One Canopy Tree for every two Single-Family Attached units.
    (v) Minor modifications: The Director of Development Services or his/her designee is authorized to administratively approve modifications to the landscaping requirements necessitated by conflicting requirements for public or franchise utilities or drainage improvements.

Revise 9.04.045.d.12 to read:

~~No tree shall be plated closer than four feet to a right-of-way line nor closer than eight feet to a public utility line (water or sewer), unless no other alternative is available. Further, a landscaping area in which trees are to be provided shall not conflict with a utility easement, unless no alternative is available.~~ Tree planting in proximity to right-of-way shall be governed by the street tree exhibits included in **Exhibit D** of the Development Agreement.

SECTION 9. ARTICLE 9.05 SIGN ORDINANCE

1. **Section 9.05.018 Detached Signs**

(d) Subdivision Entry Signs

Definition.

(1)

Subdivision Entry Sign. A sign which may be a freestanding monument or attached to a subdivision wall located at the entry of a platted subdivision from a local, collector, or arterial street.

(2) Standards.

Generally. Table 3-7 establishes the standards for subdivision entry signs.

Table 3-7: Subdivision Entry Sign Standards

Sign District → Requirement ↓	**AE**	**SF**	**MR**	**CM**	**MU**	**DT**	**IN**
General							
Allowed?	Y	Y	Y	N	Y	N	Y
Permit Required?	Y	Y	Y	--	Y	--	Y
Number per entrance (max.)	1	2	2	--	2	--	2
Dimensions							
Sign Area (max.)	150 sf	200 sf	150 sf	--	~~150 sf~~ 200 sf	--	150 sf
Sign Height (max).	6 ft	~~6 ft~~ 15 ft	6 ft	--	~~6 ft~~ 15 ft	--	8 ft

Setbacks							
From ROW	5 ft	5 ft	5 ft	--	5 ft	--	5 ft
Features							
Electronic Message Center	N	N	N	--	N	--	N
Changeable Copy	N	N	N	--	N	--	N
Channel Letters	Y	Y	Y	--	Y	--	Y
Internal Illumination	N	N	N	--	N	--	N
External Illumination	Y	Y	Y	--	Y	--	Y
Halo Illumination	Y	Y	Y	--	Y	--	Y
Additional Information							
Key	Y = yes, a permit is required or the feature is allowed | N = no/ not allowed | NR = the sign type or characteristic is allowed for nonresidential uses only | sf = square feet | ft = feet | "-" = the standard does not apply						
Sign District Summary	AE = AG district and ETJ | SF = SF-20.0- SF-6.0 districts | MR = MD and MF districts | CM = C-1 and C-2 districts |MU = MU district | DT = DT district | IN = I-1 and I-2 districts						

(B) Number and Location

(i) Two (2) subdivision entry signs may be located at the intersection of a collector or arterial street and an entry street or private driveway into a subdivision. ~~The signs shall be configured as follows.~~

a. ~~Two (2) signs with one (1) sign face each located on opposite sides of the entry street private driveway;~~

~~b. One (1) sign with two (2) faces located within a landscaped areas dividing two (2) one-way entry streets or private driveways;~~

~~c. One (1) sign located on one (1) side of the entry street or private driveway; or~~

~~d. One (1) sign located on an archway above the entry street or private driveway~~

(ii) Subdivision entrances from a right-of-way greater than 60 feet shall require signage. Secondary entrance connecting to other neighborhoods may be allowed but are not required.

(C) Design and Installation.

(i) Subdivision entry signs shall be constructed with stone, brick, concrete, metal, routed wood planks or beams, or similar durable, weatherproof materials.

(ii) All subdivision entry signs shall be landscaped around the base of the sign in an area equal to four square feet for each square foot of sign areas. In case where the location of the sign could not accommodate such landscape areas, the area may be reduced up to 50% at the Directors' discretion.

(iii) When electrical service is provided to a subdivision entry sign, all electrical service shall be underground

SECTION 11. DEFINITIONS

Sec. 9.04.081 Land Use Terms

Agritainment:

Events and activities that allow for education, culinary experiences, recreation, entertainment, and tourism that is in conjunction with on-going agricultural activities on-site (examples include corn mazes, hayrides, classes, food festivals and petting zoos).

Garden Homes:

A configuration of single family detached units that are in a cluster of 4-6 units with a shared access easement driveway and a minimum of 2 homes facing the street. See conceptual example figure with approximate dimensions and attributes.

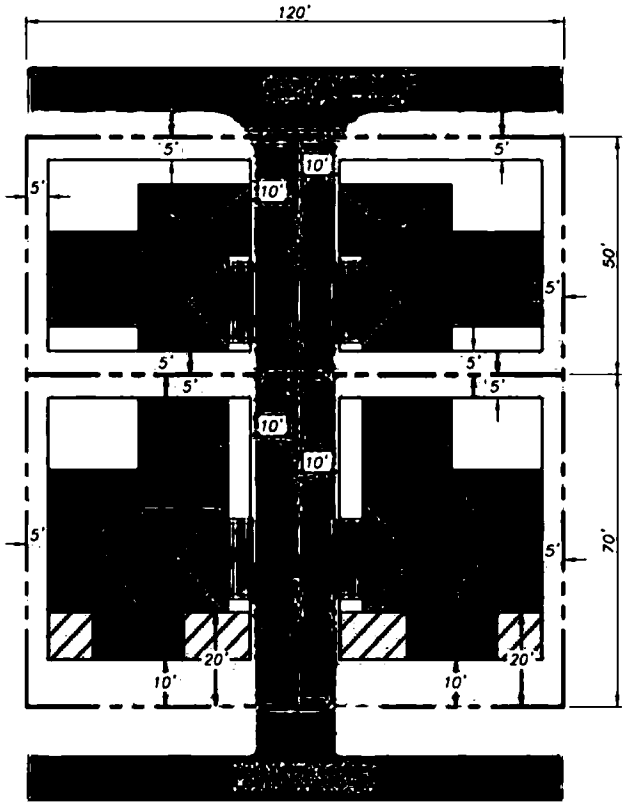

Garden Home Unit:

A configuration of single family detached units, on a shared lot, that are in a cluster of 4-6 units with a shared access easement driveway and a minimum of 2 homes facing the street. See conceptual example figure above with approximate dimensions and attributes except that for a Garden Home Unit it would be a single shared lot.

Mini-Warehouse/Public Storage:

~~A facility used for storage of goods and/or materials with separate access to individual storage units by persons renting the individual units.~~

A building containing separate, individual, self-storage units of 500 square feet or less for rent or lease.

The conduct of sales, business, or any activity other than storage or ancillary goods and services (e.g., insurance, moving boxes, tape or other equipment) shall be prohibited within any individual storage unit.

Shared Workspace:

An accessory commercial use that is a shared work area that may be in an enclosed building and/or outdoor spaces intended as an amenity to support small-scale employment, hobbies, or crafts in proximity to residential uses.

Cottage Home Unit:

A configuration of single family detached units, on a shared lot, with the same architectural style as the Cottage Home Residential District.

SECTION 11. ATTACHMENTS

A. Attachment Road Network and Street Sections

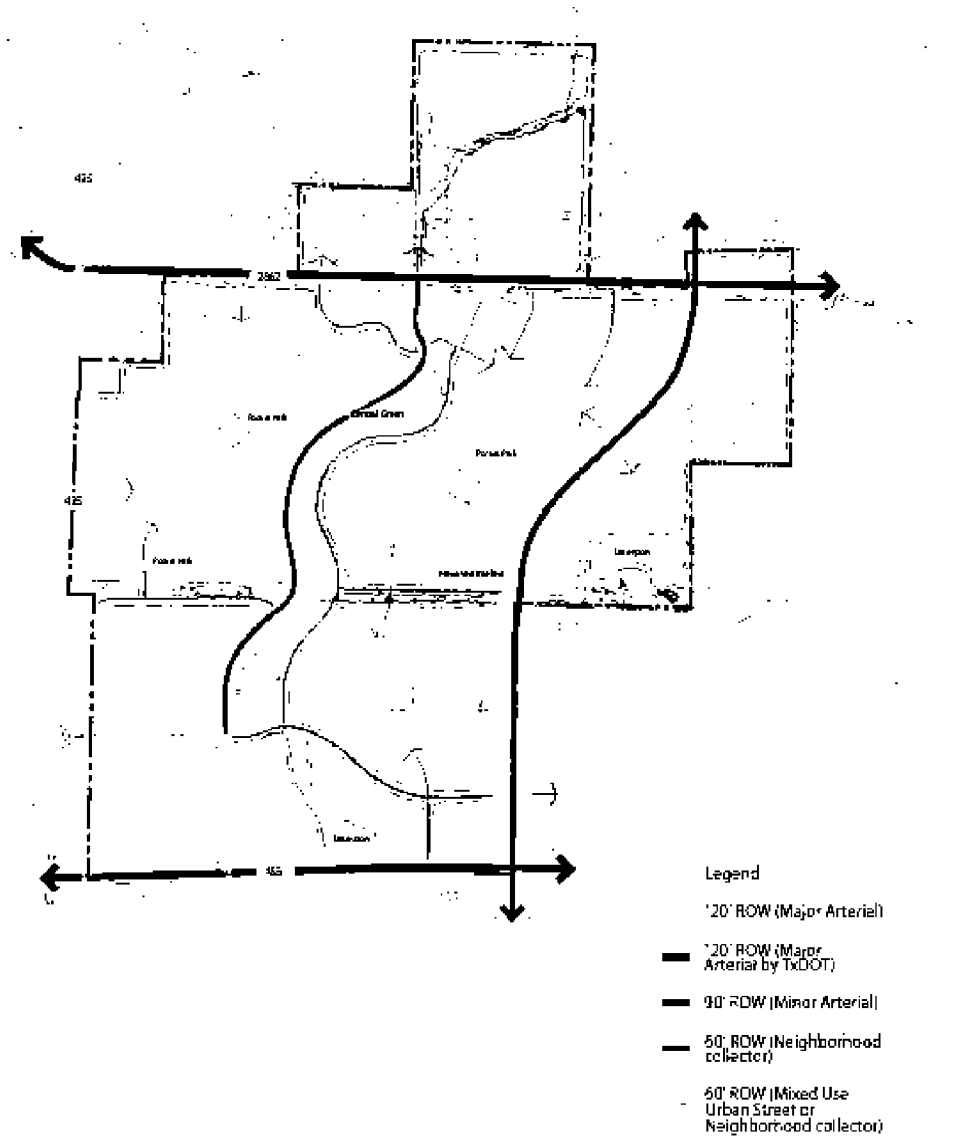

TBG Sherley Farms

Anna, Texas

04/25/24

street section map

The information shown is conceptual and is subject to change as part of future construction plans and platting submittals. Street classifications and alignments are subject to future traffic studies (traffic impact analysis (TIA)).

TBG
2001 Bryan St. Suite 1450
Dallas, Texas 75201
(214) 744-0757 tbgpartners.com

0 800' 1600'

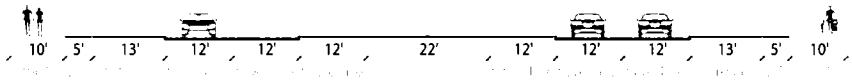

46' median refuge
120' R.O.W.
Major Arterial

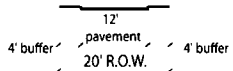

20' R.O.W.
Residential Alley

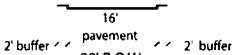

20' R.O.W.
Commercial Alley

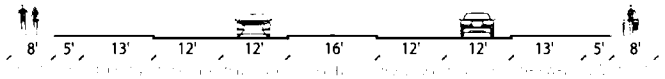

90' R.O.W.
Minor Arterial

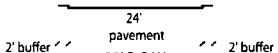

28' R.O.W.
Mews Alley

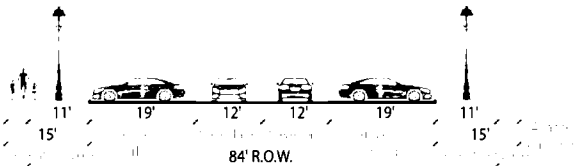

84' R.O.W.
Urban Avenue*

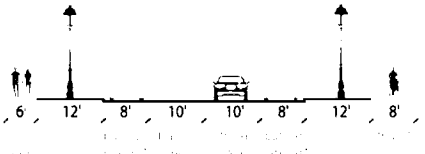

60' R.O.W.
Neighborhood Collector

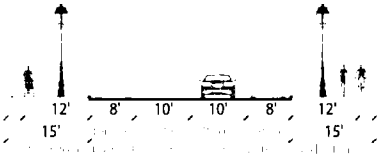

60' R.O.W.
Mixed Use Urban Street

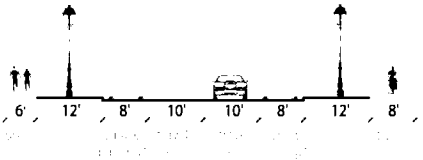

60' R.O.W.
Neighborhood Collector

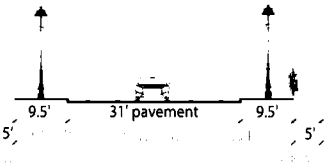

50' R.O.W.
Neighborhood Street

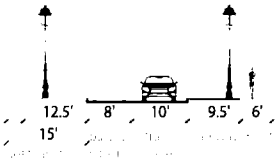

40' R.O.W.
Urban Oneway Court

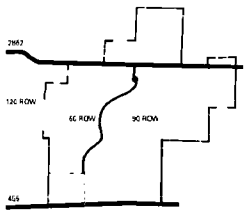

TBG sherley farms street sections

Anna, Texas
03/11/2024

0 10' 20' 40'

B. Street Tree Details

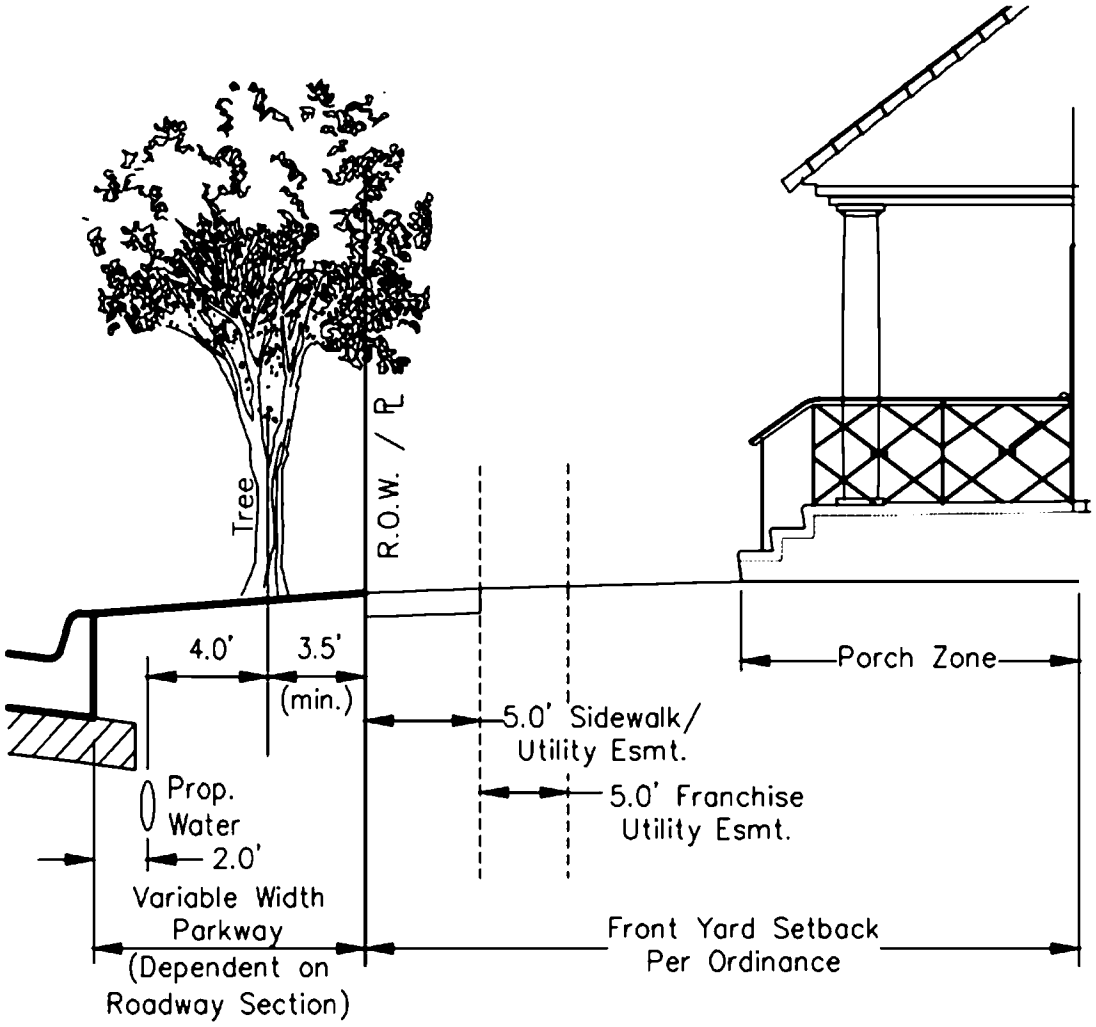

Note:
1. See typical root barrier detail for specifics on root barrier layout.
2. Street tree location shall comply with all City of Anna visibility requirements.

STREET TREE LAYOUT DETAIL

(N.T.S.)

PAGE 1 OF 1

SPIARS ENGINEERING & SURVEYING

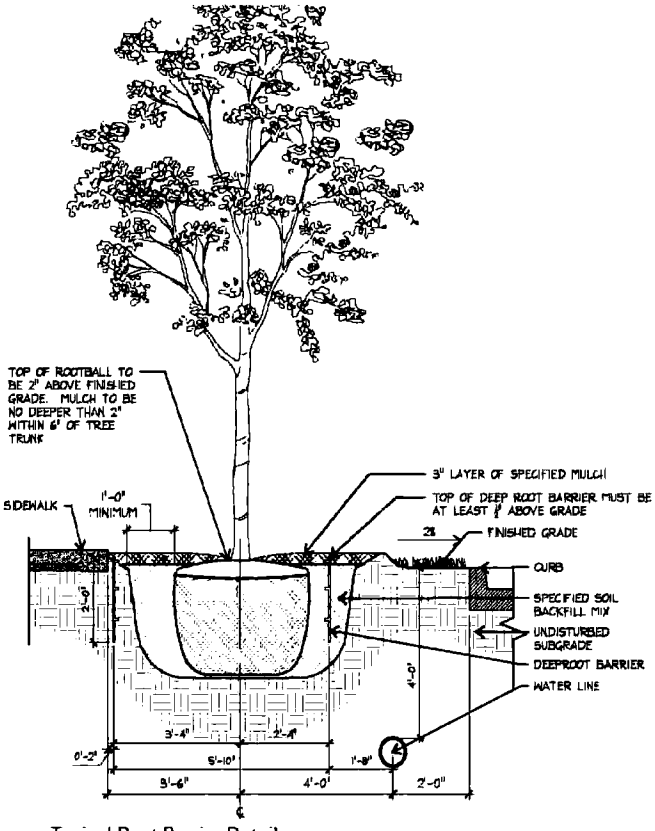

1 Typical Root Barrier Detail

PLAN/SECTION

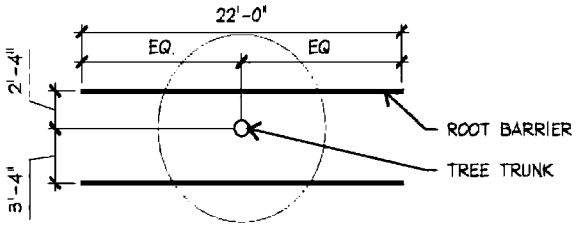

PLAN VIEW

NOT TO SCALE

Surround Style Planting with Deeproot Universal Barriers

When selecting the Surround style planting application you will have the greatest success by following these simple steps as illustrated below:

A. Prepare the initial planting hole as illustrated below. This is based upon the combination of desired barrier diameter and depth. Consider if drainage devices or amendments are needed to correct any adverse soil or planting conditions in the backfill area.

B. Assemble the appropriate number of DeepRoot Universal Barrier panels. The vertical root deflecting ribs on the panel must face inward, toward the root ball. (This is very important, otherwise the roots will become girdled by traveling around the smooth walled surface)

C. Next place the barrier in the corner of the planting hole, keeping in mind that the double top edge of the barrier should be positioned approximately 1/2" (13mm) above grade. This helps retard potential root overgrowth. Failing to position the top edge above grade can allow root overgrowth which can lead to uprooted hardscapes.

D. Backfill and compact with soil inside the barrier to the level where the bottom of the root ball will be when positioned correctly with the crown of the root ball approximately 1" (25mm) above grade.

E. Remove the tree from its container, or cut away the top portion of burlap and position in the center of the barrier. Complete the backfill of the soil. Eliminate evenly to maintain the shape of the barrier and compact the backfill every 4"-6" (10cm-15cm). Roots will die quickly if left exposed to the elements so keep exposure of the roots to a minimum.

F. If staking or guying is required we recommend using the soft, safe and economical alternative to traditional wire and hose, ArborTie (see www.deeproot.com for details)

G. If the tree(s) will be subject to maintenance work such as lawn mowing or weed trimming we strongly recommend the installation of ArborGard+ Tree Trunk Protectors which are placed around the base of young trees to protect them from damage by weed trimmers, lawn mowers and small rodents. (See www.deeproot.com)

H. Water and follow proper tree maintenance practices.

Trees do require care and nurturing after planting. Consult with your local supplier for proper care procedures for the species you are planting. The planting instructions given here are by no means a comprehensive guide. Rather they are general guidelines to planting with DeepRoot Barriers and a survey of current planting methods. Conditions will vary however and it is recommended that an Arborist be consulted before planting.

For additional information please visit our website at www.deeproot.com

For information regarding distributors please call 1 800 ILV ROOT (458.7668). For help with drainage or other difficult installation questions please call DeepRoot Technical Support at: 1 800 ROOT TEK (766.8835)

Exhibit E

Authorized Improvements and Budgeted Costs

Exhibit E - Authorized Improvements and Budgeted Costs

10/7/2024

Sherley Farms PID
Anna, Texas
Collin County

2,578 Lots
Typical Lot Size Varies

Prepared for

Tellus Group LLC

Prepared by

SPIARS
ENGINEERING & SURVEYING

Job #23.288

765 Custer Road, Suite 100
Plano, Texas 75075
Ph. 972.422.0077, Fax 972.422.0075
TBPE# F-2121

Exhibit E - Authorized Improvements and Budgeted Costs

Development Phase	Lot Count	PID Direct Costs			
		Cost Per Lot	Residential	Box Culvert & Detention	Total PID Direct
Phase 1	423	$52,063	$20,884,308	$1,138,483	$22,022,792
Phase 2	307	$52,529	$14,945,666	$1,180,672	$16,126,338
Phase 3	419	$48,737	$20,241,658	$179,200	$20,420,858
Phase 4	316	$62,172	$18,171,352	$1,475,072	$19,646,424
Phase 5	421	$53,579	$21,332,215	$1,224,704	$22,556,919
Phase 6	494	$47,777	$22,608,500	$993,536	$23,602,036
Phase 7	198	$71,503	$14,157,684	$0	$14,157,684
TOTAL	2578	$53,737	$132,341,384	$6,191,667	$138,533,051

Notes:
1. This summary table only shows PID eligible costs.
2. It is assumed that only Direct PID costs will be reimbursed. Items that would be classified as Major Improvements have been excluded.
3. Turn lanes, collector paving, box culverts, and detention costs have been included. It is assumed that they will be categorized as direct costs.

2024 - 202400159039 12/23/2024 11:23 AM Page 100 of 134

Phase 1 Sherley Farms: Anna, Texas

Total Number of Lots: 423 **Based on Lot Count and Centerlines**

100's: 0 **TH: 0** **40's: 82** **50's: 171** **60's: 137** **70's: 33**

	Total	Quantity	Unit	Unit Cost
ON-SITE CONSTRUCTION COSTS				
HARD COSTS				
Erosion Control	$231,360.00	23,136	LF	$10.00
SWPPP/Inspection	$15,000.00	1	LS	$15,000.00
Construction Materials Testing	$232,650.00	423	Lot	$550.00
Excavation	$380,700.00	423	Lot	$4,500.00
Rock Surcharge	$860,310.00	1	LS	$860,310.00
Water	$2,679,120.00	22,326	LF	$120.00
Storm Sewer	$3,701,760.00	23,136	LF	$160.00
Sanitary Sewer	$2,544,960.00	23,136	LF	$110.00
Paving (Residential)	$5,581,500.00	22,326	LF	$250.00
Paving (Collector)	$243,000.00	810	LF	$300.00
Paving (Mews Alley)	$321,400.00	1,607	LF	$200.00
Paving (Alley)	$0.00	0	LF	$100.00
Turn Lanes (City)	$200,000.00	5	EA	$40,000.00
Turn Lanes (TXDOT)	$0.00	0	EA	$200,000.00
Signage (Includes CBUs)	$231,360.00	23,136	LF	$10.00
Subtotal Hard Costs	$17,223,120.00			
On-Site Contingency (10%)	$1,722,312.00			
Total Hard Costs	$18,945,432.00		Lot	$44,788.26
SOFT COSTS				
Preliminary Engineering	$63,450.00	423	Lot	$150.00
Engineering, Construction Staking, Administrative	$1,015,200.00	423	Lot	$2,400.00
Survey (topo, tree, boundary, easements, etc.)	$38,990.00	1	LS	$38,990.00
Soil Testing - Final Geotech	$83,550.00	111	Acre	$750.00
Re-Staking	$21,150.00	423	Lot	$50.00
Flood Study	$50,000.00	1	LS	$50,000.00
Environmental Studies	$20,000.00	1	LS	$20,000.00
Inspection Fees (4.0%)	$646,536.40	1	LS	$646,536.40
Total Soft Costs	$1,938,876.40		Lot	$4,583.63
RESIDENTIAL PID DIRECT COST	**$20,884,308.40**		**Lot**	**$ 49,371.89**

Phase 2 Sherley Farms: Anna, Texas

Total Number of Lots: 307 **Based on Lot Count and Centerlines**

100's: 0 **TH: 0** **40's: 0** **50's: 134** **60's: 149** **70's: 24**

	Total	Quantity	Unit	Unit Cost
ON-SITE CONSTRUCTION COSTS				
HARD COSTS				
Erosion Control	$171,390.00	17,139	LF	$10.00
SWPPP/Inspection	$15,000.00	1	LS	$15,000.00
Construction Materials Testing	$168,850.00	307	Lot	$550.00
Excavation	$276,300.00	307	Lot	$4,500.00
Rock Surcharge	$567,060.00	1	LS	$567,060.00
Water	$2,056,680.00	17,139	LF	$120.00
Storm Sewer	$2,742,240.00	17,139	LF	$160.00
Sanitary Sewer	$1,380,940.00	12,554	LF	$110.00
Paving (Residential)	$4,284,750.00	17,139	LF	$250.00
Paving (Collector)	$0.00	0	LF	$300.00
Paving (Mews Alley)	$114,600.00	573	LF	$200.00
Paving (Alley)	$0.00	0	LF	$100.00
Turn Lanes (City)	$0.00	0	EA	$40,000.00
Turn Lanes (TXDOT)	$400,000.00	2	EA	$200,000.00
Signage (Includes CBUs)	$171,390.00	17,139	LF	$10.00
Subtotal Hard Costs	$12,349,200.00			
On-Site Contingency (10%)	$1,234,920.00			
Total Hard Costs	$13,584,120.00		Lot	$44,247.95
SOFT COSTS				
Preliminary Engineering	$46,050.00	307	Lot	$150.00
Engineering, Construction Staking, Administrative	$736,800.00	307	Lot	$2,400.00
Survey (topo, tree, boundary, easements, etc.)	$28,840.00	1	LS	$28,840.00
Soil Testing - Final Geotech	$61,800.00	82	Acre	$750.00
Re-Staking	$15,350.00	307	Lot	$50.00
Flood Study	$20,000.00	1	LS	$20,000.00
Environmental Studies	$0.00	0	LS	$0.00
Inspection Fees (4.0%)	$452,706.40	1	LS	$452,706.40
Total Soft Costs	$1,361,546.40		Lot	$4,435.00
RESIDENTIAL PID DIRECT COST	**$14,945,666.40**		**Lot**	**$ 48,682.95**

Phase 3 Sherley Farms: Anna, Texas

Total Number of Lots: 419 **Based on Lot Count and Centerlines**

100's: 0 **TH: 0** **40's: 155** **50's: 102** **60's: 162** **70's: 0**

	Total	Quantity	Unit	Unit Cost
ON-SITE CONSTRUCTION COSTS				
HARD COSTS				
Erosion Control	$211,780.00	21,178	LF	$10.00
SWPPP/Inspection	$15,000.00	1	LS	$15,000.00
Construction Materials Testing	$230,450.00	419	Lot	$550.00
Excavation	$377,100.00	419	Lot	$4,500.00
Rock Surcharge	$772,476.00	1	LS	$772,476.00
Water	$2,252,040.00	18,767	LF	$120.00
Storm Sewer	$3,388,480.00	21,178	LF	$160.00
Sanitary Sewer	$2,329,580.00	21,178	LF	$110.00
Paving (Residential)	$4,691,750.00	18,767	LF	$250.00
Paving (Collector)	$723,300.00	2,411	LF	$300.00
Paving (Mews Alley)	$752,000.00	3,760	LF	$200.00
Paving (Alley)	$163,800.00	1,638	LF	$100.00
Turn Lanes (City)	$0.00	0	EA	$40,000.00
Turn Lanes (TXDOT)	$600,000.00	3	EA	$200,000.00
Signage (Includes CBUs)	$211,780.00	21,178	LF	$10.00
Subtotal Hard Costs	$16,719,536.00			
On-Site Contingency (10%)	$1,671,953.60			
Total Hard Costs	$18,391,489.60		Lot	$43,893.77
SOFT COSTS				
Preliminary Engineering	$62,850.00	419	Lot	$150.00
Engineering, Construction Staking, Administrative	$1,005,600.00	419	Lot	$2,400.00
Survey (topo, tree, boundary, easements, etc.)	$41,160.00	1	LS	$41,160.00
Soil Testing - Final Geotech	$88,200.00	118	Acre	$750.00
Re-Staking	$20,950.00	419	Lot	$50.00
Flood Study	$20,000.00	1	LS	$20,000.00
Environmental Studies	$0.00	0	LS	$0.00
Inspection Fees (4.0%)	$611,408.24	1	LS	$611,408.24
Total Soft Costs	$1,850,168.24		Lot	$4,415.68
RESIDENTIAL PID DIRECT COST	**$20,241,657.84**		**Lot**	**$ 48,309.45**

Phase 4 Sherley Farms: Anna, Texas

Total Number of Lots: 316 **Based on Lot Count and Centerlines**

100's: 0 **TH: 19** **40's: 85** **50's: 71** **60's: 120** **70's: 21**

	Total	Quantity	Unit	Unit Cost
ON-SITE CONSTRUCTION COSTS				
HARD COSTS				
Erosion Control	$202,180.00	20,218	LF	$10.00
SWPPP/Inspection	$15,000.00	1	LS	$15,000.00
Construction Materials Testing	$173,800.00	316	Lot	$550.00
Excavation	$284,400.00	316	Lot	$4,500.00
Rock Surcharge	$732,786.00	1	LS	$732,786.00
Water	$2,087,640.00	17,397	LF	$120.00
Storm Sewer	$3,234,880.00	20,218	LF	$160.00
Sanitary Sewer	$2,223,980.00	20,218	LF	$110.00
Paving (Residential)	$4,349,250.00	17,397	LF	$250.00
Paving (Collector)	$846,300.00	2,821	LF	$300.00
Paving (Mews Alley)	$564,600.00	2,823	LF	$200.00
Paving (Alley)	$56,300.00	563	LF	$100.00
Turn Lanes (City)	$160,000.00	4	EA	$40,000.00
Turn Lanes (TXDOT)	$0.00	0	EA	$200,000.00
Signage (Includes CBUs)	$202,180.00	20,218	LF	$10.00
Subtotal Hard Costs	$15,133,296.00			
On-Site Contingency (10%)	$1,513,329.60			
Total Hard Costs	$16,646,625.60		Lot	$52,679.19
SOFT COSTS				
Preliminary Engineering	$47,400.00	316	Lot	$150.00
Engineering, Construction Staking, Administrative	$758,400.00	316	Lot	$2,400.00
Survey (topo, tree, boundary, easements, etc.)	$35,385.00	1	LS	$35,385.00
Soil Testing - Final Geotech	$75,825.00	101	Acre	$750.00
Re-Staking	$15,800.00	316	Lot	$50.00
Flood Study	$20,000.00	1	LS	$20,000.00
Environmental Studies	$0.00	0	LS	$0.00
Inspection Fees (4.0%)	$571,916.64	1	LS	$571,916.64
Total Soft Costs	$1,524,726.64		Lot	$4,825.08
RESIDENTIAL PID DIRECT COST	**$18,171,352.24**		**Lot**	**$ 57,504.28**

Phase 5 Sherley Farms: Anna, Texas

Total Number of Lots: 421 **Based on Lot Count and Centerlines**

100's: 0 **TH: 0** **40's: 173** **50's: 139** **60's: 81** **70's: 28**

	Total	Quantity	Unit	Unit Cost
ON-SITE CONSTRUCTION COSTS				
HARD COSTS				
Erosion Control	$230,850.00	23,085	LF	$10.00
SWPPP/Inspection	$15,000.00	1	LS	$15,000.00
Construction Materials Testing	$231,550.00	421	Lot	$550.00
Excavation	$378,900.00	421	Lot	$4,500.00
Rock Surcharge	$813,556.50	1	LS	$813,556.50
Water	$2,625,120.00	21,876	LF	$120.00
Storm Sewer	$3,693,600.00	23,085	LF	$160.00
Sanitary Sewer	$2,264,350.00	20,585	LF	$110.00
Paving (Residential)	$5,469,000.00	21,876	LF	$250.00
Paving (Collector)	$362,700.00	1,209	LF	$300.00
Paving (Mews Alley)	$1,087,000.00	5,435	LF	$200.00
Paving (Alley)	$57,600.00	576	LF	$100.00
Turn Lanes (City)	$200,000.00	5	EA	$40,000.00
Turn Lanes (TXDOT)	$0.00	0	EA	$200,000.00
Signage (Includes CBUs)	$230,850.00	23,085	LF	$10.00
Subtotal Hard Costs	$17,660,076.50			
On-Site Contingency (10%)	$1,766,007.65			
Total Hard Costs	$19,426,084.15		Lot	$46,142.72
SOFT COSTS				
Preliminary Engineering	$63,150.00	421	Lot	$150.00
Engineering, Construction Staking, Administrative	$1,010,400.00	421	Lot	$2,400.00
Survey (topo, tree, boundary, easements, etc.)	$40,530.00	1	LS	$40,530.00
Soil Testing - Final Geotech	$86,850.00	116	Acre	$750.00
Re-Staking	$21,050.00	421	Lot	$50.00
Flood Study	$20,000.00	1	LS	$20,000.00
Environmental Studies	$0.00	0	LS	$0.00
Inspection Fees (4.0%)	$664,151.06	1	LS	$664,151.06
Total Soft Costs	$1,906,131.06		Lot	$4,527.63
RESIDENTIAL PID DIRECT COST	**$21,332,215.21**		**Lot**	**$ 50,670.34**

Phase 6 Sherley Farms: Anna, Texas

Total Number of Lots: 494 **Based on Lot Count and Centerlines**

100's: 0 **TH: 101** **40's: 143** **50's: 123** **60's: 91** **70's: 36**

	Total	Quantity	Unit	Unit Cost
ON-SITE CONSTRUCTION COSTS				
HARD COSTS				
Erosion Control	$238,060.00	23,806	LF	$10.00
SWPPP/Inspection	$15,000.00	1	LS	$15,000.00
Construction Materials Testing	$271,700.00	494	Lot	$550.00
Excavation	$444,600.00	494	Lot	$4,500.00
Rock Surcharge	$795,220.50	1	LS	$795,220.50
Water	$2,195,760.00	18,298	LF	$120.00
Storm Sewer	$3,808,960.00	23,806	LF	$160.00
Sanitary Sewer	$2,299,110.00	20,901	LF	$110.00
Paving (Residential)	$4,574,500.00	18,298	LF	$250.00
Paving (Collector)	$1,652,400.00	5,508	LF	$300.00
Paving (Mews Alley)	$817,600.00	4,088	LF	$200.00
Paving (Alley)	$409,700.00	4,097	LF	$100.00
Turn Lanes (City)	$80,000.00	2	EA	$40,000.00
Turn Lanes (TXDOT)	$800,000.00	4	EA	$200,000.00
Signage (Includes CBUs)	$238,060.00	23,806	LF	$10.00
Subtotal Hard Costs	$18,640,670.50			
On-Site Contingency (10%)	$1,864,067.05			
Total Hard Costs	$20,504,737.55		Lot	$41,507.57
SOFT COSTS				
Preliminary Engineering	$74,100.00	494	Lot	$150.00
Engineering, Construction Staking, Administrative	$1,185,600.00	494	Lot	$2,400.00
Survey (topo, tree, boundary, easements, etc.)	$40,635.00	1	LS	$40,635.00
Soil Testing - Final Geotech	$87,075.00	116	Acre	$750.00
Re-Staking	$24,700.00	494	Lot	$50.00
Flood Study	$20,000.00	1	LS	$20,000.00
Environmental Studies	$0.00	0	LS	$0.00
Inspection Fees (4.0%)	$671,652.42	1	LS	$671,652.42
Total Soft Costs	$2,103,762.42		Lot	$4,258.63
RESIDENTIAL PID DIRECT COST	**$22,608,499.97**		**Lot**	**$ 45,766.19**

Phase 7 Sherley Farms: Anna, Texas

Total Number of Lots: 198 **Based on Lot Count and Centerlines**

100's: 150 **TH: 0** **40's: 0** **50's: 0** **60's: 0** **70's: 48**

	Total	Quantity	Unit	Unit Cost
ON-SITE CONSTRUCTION COSTS				
HARD COSTS				
Erosion Control	$163,040.00	16,304	LF	$10.00
SWPPP/Inspection	$15,000.00	1	LS	$15,000.00
Construction Materials Testing	$108,900.00	198	Lot	$550.00
Excavation	$178,200.00	198	Lot	$4,500.00
Rock Surcharge	$611,400.00	1	LS	$611,400.00
Water	$1,956,480.00	16,304	LF	$120.00
Storm Sewer	$2,608,640.00	16,304	LF	$160.00
Sanitary Sewer	$1,793,440.00	16,304	LF	$110.00
Paving (Residential)	$4,076,000.00	16,304	LF	$250.00
Paving (Collector)	$0.00	0	LF	$300.00
Paving (Mews Alley)	$0.00	0	LF	$200.00
Paving (Alley)	$0.00	0	LF	$100.00
Turn Lanes (City)	$200,000.00	5	EA	$40,000.00
Turn Lanes (TXDOT)	$0.00	0	EA	$200,000.00
Signage (Includes CBUs)	$163,040.00	16,304	LF	$10.00
Subtotal Hard Costs	$11,874,140.00			
On-Site Contingency (10%)	$1,187,414.00			
Total Hard Costs	$13,061,554.00		Lot	$65,967.44
SOFT COSTS				
Preliminary Engineering	$29,700.00	198	Lot	$150.00
Engineering, Construction Staking, Administrative	$475,200.00	198	Lot	$2,400.00
Survey (topo, tree, boundary, easements, etc.)	$35,945.00	1	LS	$35,945.00
Soil Testing - Final Geotech	$77,025.00	103	Acre	$750.00
Re-Staking	$9,900.00	198	Lot	$50.00
Flood Study	$20,000.00	1	LS	$20,000.00
Environmental Studies	$0.00	0	LS	$0.00
Inspection Fees (4.0%)	$448,360.00	1	LS	$448,360.00
Total Soft Costs	$1,096,130.00		Lot	$5,536.01
RESIDENTIAL PID DIRECT COST	**$14,157,684.00**		**Lot**	**$ 71,503.45**

Sherley Farms: Anna, Texas

Box Culvert & Detention Budget Summary

Quantities by Phase Development Item	5'X5' RCB	9'X8' RCB	6'x6' RCB	7'x6' RCB	8'X6' RCB	8'X7' RCB	Excavation	Headwall	Minor Outfall Structures	Emergency Spillway	Asphalt Removal and Replacement	Trench Safety	Storm Sewer Line Testing and TV Insp.	Phase Total	Construction Contingency 10.00%	Design & Staking 12.00%	Inspection Fees 4.00%	Maintenance Bond 2.00%	Total Cost
Phase 1	0	240	0	0	0	0	100000	2	0	1	0	240	240	$889,440	$88,944	$106,733	$35,578	$17,789	$1,138,483
Phase 2	0	0	0	0	400	0	0	6	0	0	0	400	400	$922,400	$92,240	$110,688	$36,896	$18,448	$1,180,672
Phase 3	0	0	0	0	0	0	30000	0	1	0	0	0	0	$140,000	$14,000	$16,800	$5,600	$2,800	$179,200
Phase 4	400	0	0	0	0	0	150000	2	0	0	1500	400	400	$1,152,400	$115,240	$138,288	$46,096	$23,048	$1,475,072
Phase 5	0	0	200	100	0	0	30000	6	1	0	0	300	300	$956,800	$95,680	$114,816	$38,272	$19,136	$1,224,704
Phase 6	200	0	0	0	0	0	25000	4	2	1	0	200	200	$776,200	$77,620	$93,144	$31,048	$15,524	$993,536
Phase 7	0	0	0	0	0	0	0	0	0	0	0	0	0	$0	$0	$0	$0	$0	$0
Units	LF	LF	LF	LF	LF	LF	CY	EA	SY	SY	SY	LF	LF						
Unit Cost	$500	$1,200	$700	$750	$800	$850	$3	$100,000	$50,000	$100,000	$200	$1	$5						
Total Quantity	600	240	200	100	400	0	335,000	20	4	2	1,500	1,540	1,540						
TOTAL PROJECT COST	$300,000	$288,000	$140,000	$75,000	$320,000	$0	$1,005,000	$2,000,000	$200,000	$200,000	$300,000	$1,540	$7,700	**$4,837,240**	**$483,724**	**$580,469**	**$193,490**	**$96,745**	**$6,191,667**

2024 - 20240001590339 12/23/2024 11:23 AM Page 108 of 134

SPIARS
ENGINEERING & SURVEYING

Sherley Farms - Assumptions

1 Estimate assumes that collector paving and drainage, box culvert, and stormwater detention improvements will be classified as direct improvements.

2 Landscape, amenity, and trail costs excluded from this estimate.

3 Estimate assumes that left turn lanes and/or escrows will be required at all entrances to development.

4 Estimate assumes utilites are stubbed to seller retained parcels and multifamily tract.

5 Estimate assumes that CR 424 will have a 36' B-B setion. Assumes that CR 424 extends across the entire property. This is a reduced section as compared with Anna's Master Thoroughfare Plan.

6 Estimate assumes the following street sections:12' E-E alleys, 27' B-B residential and 36' B-B collector.

7 Estimate reflects all eligible PID direct costs.

8 Drainage design accounts for undeveloped offsite flows. It is assumed adjacent properties will be required to detain when they develop.

9 Assumes no decelaration lanes will be required.

10 Assumes no right turn lanes will be required.

11 Assumes culverts under FM 455 will require a portion of the existing TxDOT road to be demolished and re-installed.

Exhibit F-1

Major Sewer Improvements

2024 - 20240000159039 12/23/2024 11:23 AM Page 111 of 134

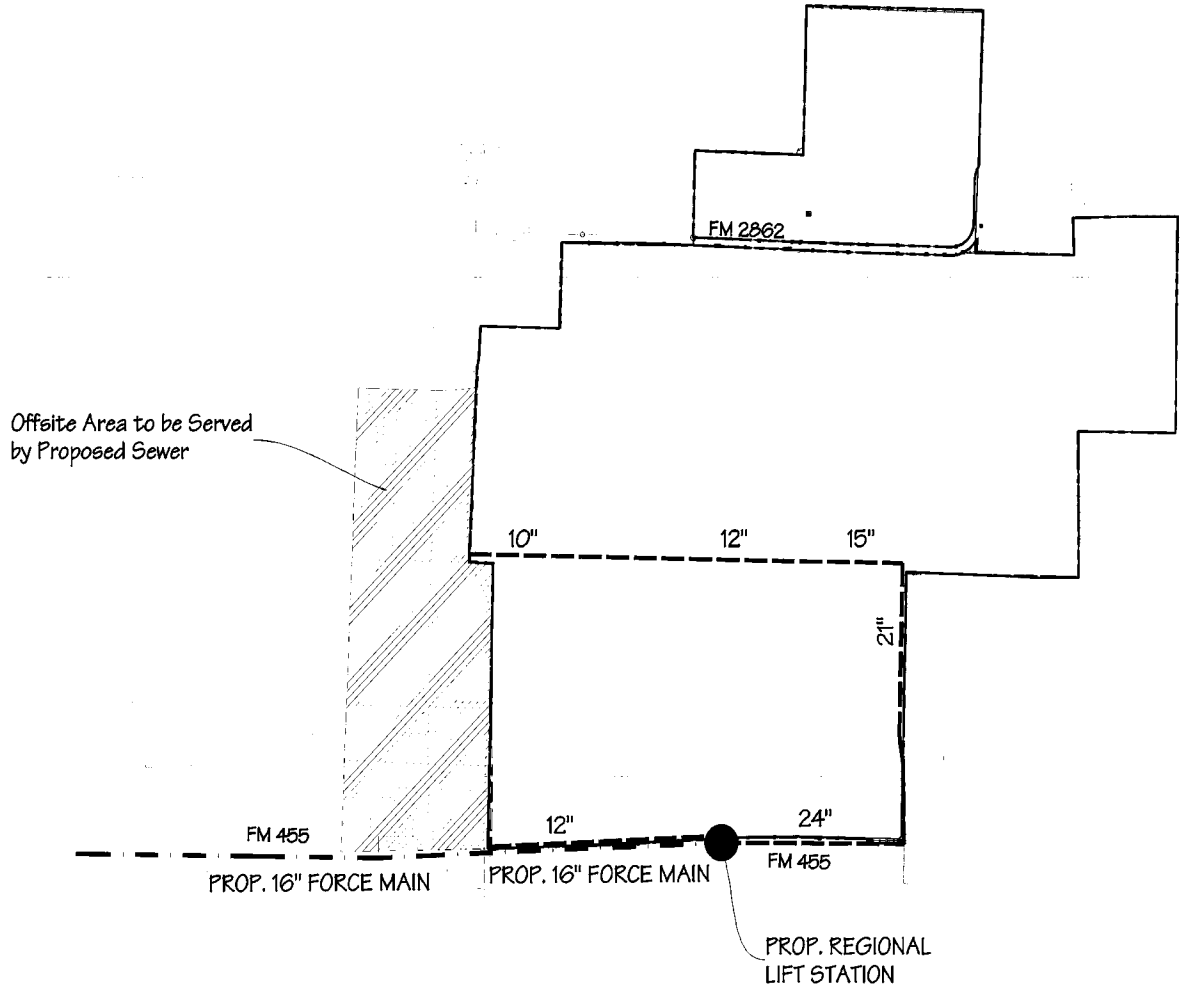



LEGEND

= PROPOSED DEVELOPER SEWER

= PROPOSED FORCE MAIN

Note:

1. Alignments shown are conceptual and subject to change.
2. Pipe sizes are approximated for reference. Actual pipe sizes to be determined at time of final design.

EXHIBIT F-1 - MAJOR SEWER IMPROVEMENTS

SHERLEY FARMS

CITY OF ANNA, COLLIN COUNTY, TEXAS
G. MORRISON SURVEY ~ ABSTRACT NO. 559

OCTOBER OF 2024

SPIARS ENGINEERING & SURVEYING
765 Custer Road, Suite 100 • Plano, TX 75075 • 972.422.0077
TBPE No F-2121 • TBLPS No. F-10043100 • www.spiarseng.com

Exhibit F-2

City Constructed Sewer Improvements

2024 - 20240000159039 12/23/2024 11:23 AM Page 113 of 134

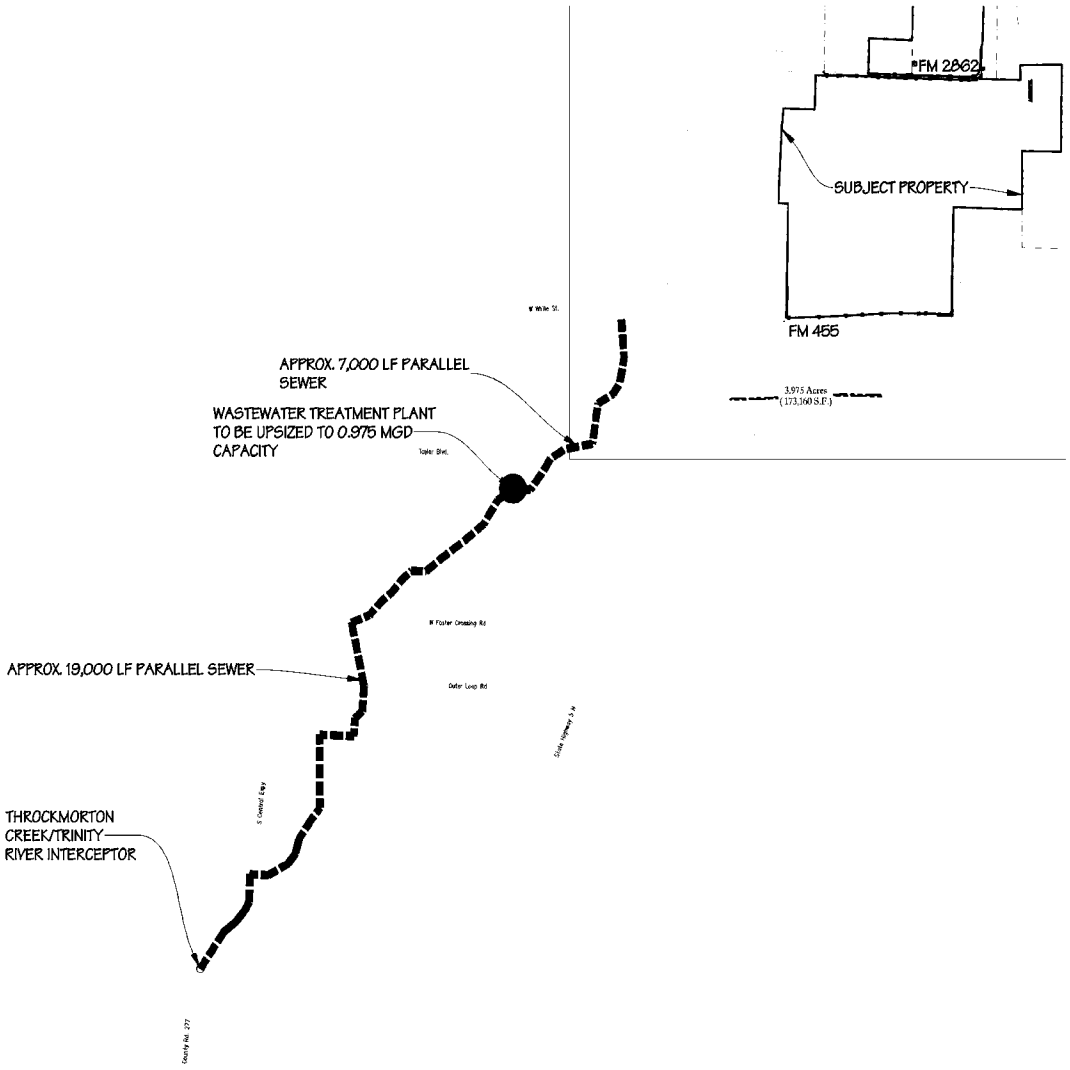

N
W E
S

0 300 600 1200
1 inch = 600 ft.

LEGEND

▮▮▮▮▮▮ = PROPOSED CITY IMPROVEMENTS

Note:
1. Alignments shown are conceptual and subject to change.

EXHIBIT F-2 - CITY CONSTRUCTED SEWER IMPROVEMENTS

SHERLEY FARMS

CITY OF ANNA, COLLIN COUNTY, TEXAS
G. MORRISON SURVEY ~ ABSTRACT NO. 559

OCTOBER OF 2024

SPIARS ENGINEERING & SURVEYING
765 Custer Road, Suite 100 • Plano, TX 75075 • 972.422.0077
TBPE No F-2121 • TBLPS No. F-10043100 • www.spiarseng.com

Exhibit F-3

Sewer Improvements Schedule

EXHIBIT F-3
SEWER IMPROVEMENTS SCHEDULE

Construction Phase	Segment/Part	Facility Classification	Description	Cost Responsibility *(Design, Construction, Easement Acquisition, and Construction Management)*	Construction Funding	Timing	Equivalent Dwelling Units (EDUs) Construction Completion Timing	Equivalent Dwelling Units (EDUs) Capacity Allocated by City to Developer upon Completion of Phase Improvements
Phase 1	1	Lift Station	Onsite 6.7 MGD Peak Flow Lift Station	Developer	Developer (Reimbursable per Agreement)	Design Start - Preliminary Plat Approval	**Prior to 1 EDU**	**488 (488 Overall)**
	2	Force Main	8,000 LF of 16" force main along FM 455	Developer (City to provide condemnation assistance if needed)	Developer (Reimbursable per Agreement)	Design Start - Preliminary Plat Approval		
	3	Onsite Trunk Sewer	5,400 LF (21"-24") Onsite Trunk Sewer to serve Phase 1 of Sherley Farms	Developer	Developer (Reimbursable per Agreement)	Design Start - Preliminary Plat Approval		
Phase 2	4	Onsite Trunk Sewer	2,100 LF (12"-15") Onsite Trunk Sewer to Serve Phase 2 of Sherley Farms	Developer	Developer (Reimbursable per Agreement)	Design Start - Phase 2 Preliminary Plat Approval	**Prior to 489 EDUs**	**469 (957 Overall)**
Phase 3	5	Onsite Trunk Sewer	3,100 LF (30"-36") Trunk Sewer From FM 455 to Slayter Creek Treatment Plant	Developer	Developer (Reimbursable per Agreement)	Design & Easement Acquisition - upon approval of this DA	**Prior to 958 EDUs**	**470 (1,427 Overall)**
	6	Offsite Trunk Sewer	7,000 LF (10") Trunk Sewer From FM 455 to Slayter Creek Treatment Plant	City	City	Design & Easement Acquisition - upon the effective date of this agreement		
Phase 4	7	Offsite Treatment	Relocate Package Plant From Hurricane Creek Treatment Plant to Slayter Creek Treatment Plant or Install another package plant	City	City	Design - Currently Underway	**Prior to 1,428 EDUs**	**928 (2,355 Overall)**
Phase 5	8	Renegotiate Anna/Melissa Sewer Discharge Agreement	City of Anna to negotiate with City of Melissa to obtain increased allowable discharges covering Sherley Farms	City	City	Formal Negotiations to Begin upon the effective date of this agreement	**Prior to 2,356 EDUs**	**1,568 (3923 Overall)**
Phase 6	9	Offsite Trunk Sewer	19,000 LF of offsite trunk sewer downstream of Slayter Creek WWTP	City	City	Design - 8 months after the effective date of this agreement		

Notes:

1. Timing is based on initial City draft of deal points.
2. Phasing doesn't necessarily correspond to actual project phasing

2024 - 20240001159039 12/23/2024 11:23 AM Page 115 of 134

Exhibit G

Major Water Improvements

2024 - 20240000159039 12/23/2024 11:23 AM Page 117 of 134

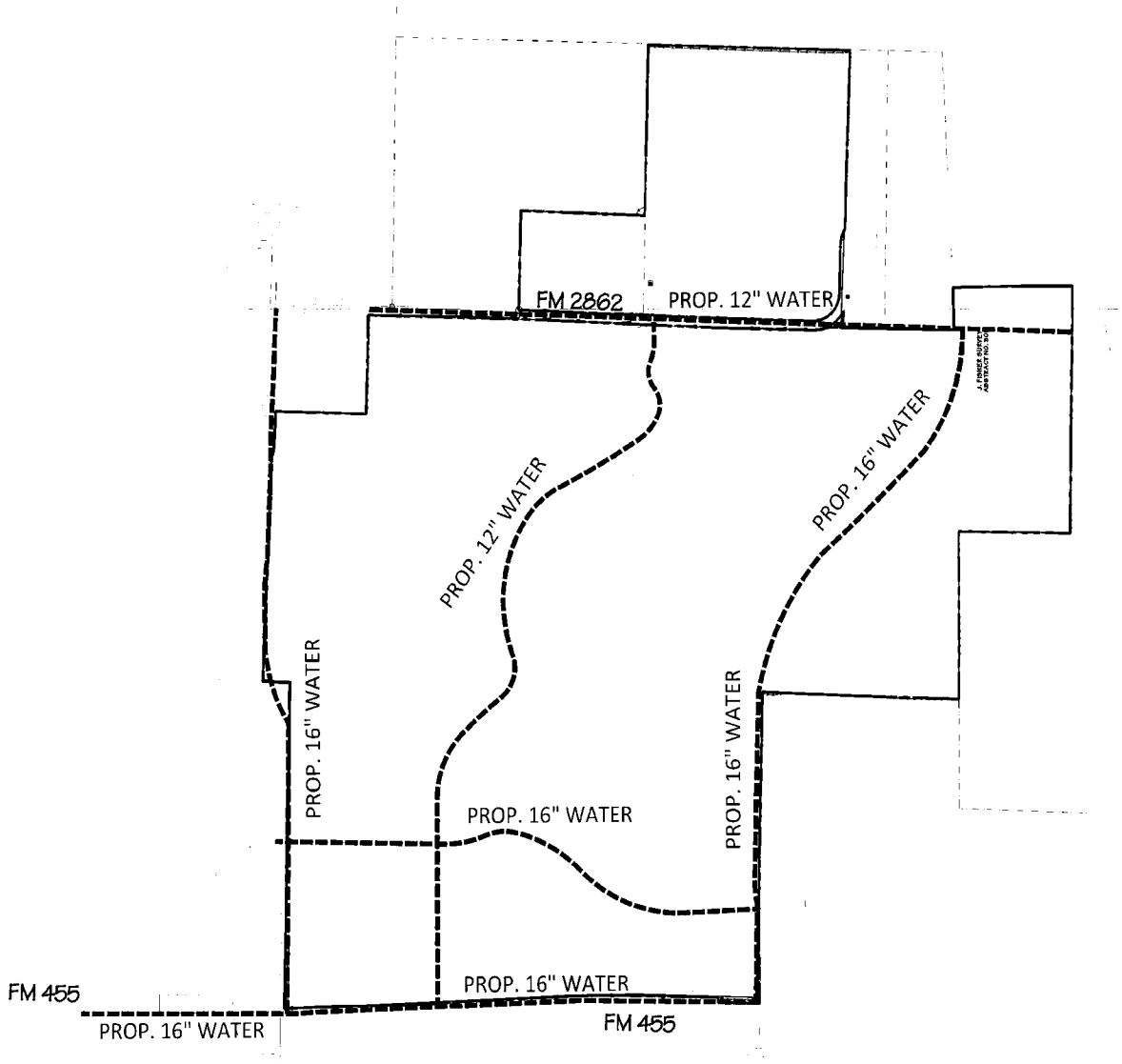

N
W E
S

0 250 500 1000
1 inch = 500 ft

LEGEND

■■■■■■■ = PROPOSED DEVELOPER WATER

Note:
1. Alignments shown are conceptual and subject to change.

EXHIBIT G - MAJOR WATER IMPROVEMENTS

SHERLEY FARMS

CITY OF ANNA, COLLIN COUNTY, TEXAS
G. MORRISON SURVEY ~ ABSTRACT NO. 559

OCTOBER OF 2024

SPIARS
ENGINEERING & SURVEYING
765 Custer Road, Suite 100 • Plano, TX 75075 • 972.422.0077
TBPE No F-2121 • TBLPS No. F-10043100 • www.spiarseng.com

Exhibit H

Major Roadway Improvements

2024 - 20240000159039 12/23/2024 11:23 AM Page 119 of 134

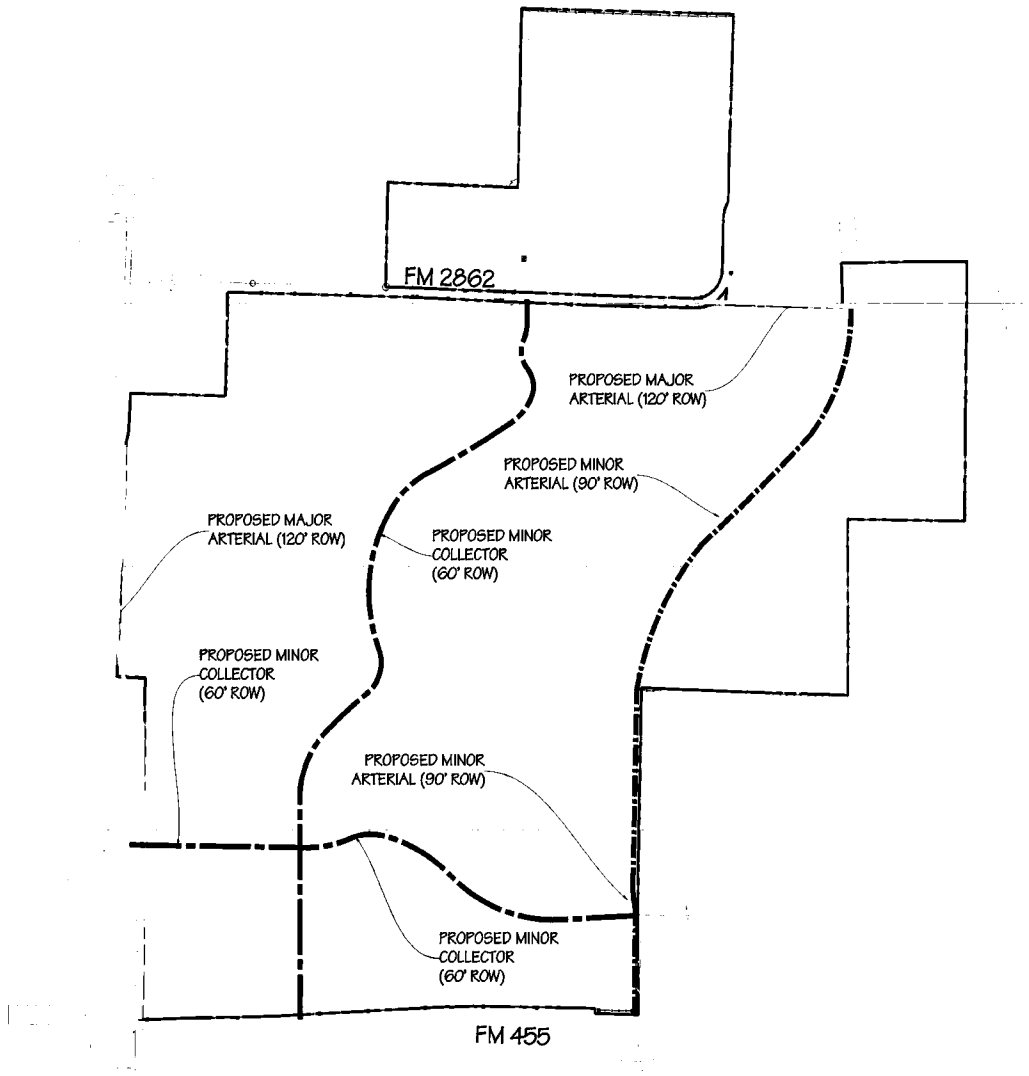

N
W E
S

0 250 500 1000
1 inch = 500 ft.

LEGEND

= PROPOSED MINOR ARTERIAL
= PROPOSED MAJOR ARTERIAL
= PROPOSED MINOR COLLECTOR

Note:
1. Alignments shown are conceptual and subject to change.
2. Developer shall construct 2 Lanes (25' B-B) of shown divided arteriale.

EXHIBIT H - MAJOR ROADWAY IMPROVEMENTS

SHERLEY FARMS

CITY OF ANNA, COLLIN COUNTY, TEXAS
G. MORRISON SURVEY ~ ABSTRACT NO. 559

OCTOBER OF 2024

SPIARS ENGINEERING & SURVEYING
765 Custer Road, Suite 100 • Plano, TX 75075 • 972.422.0077
TBPE No F-2121 • TBLPS No. F-10048100 • www.spiarseng.com

Exhibit H-1

Proposed Thoroughfare Plan Revision

2024 - 20240000159039 12/23/2024 11:23 AM Page 121 of 134

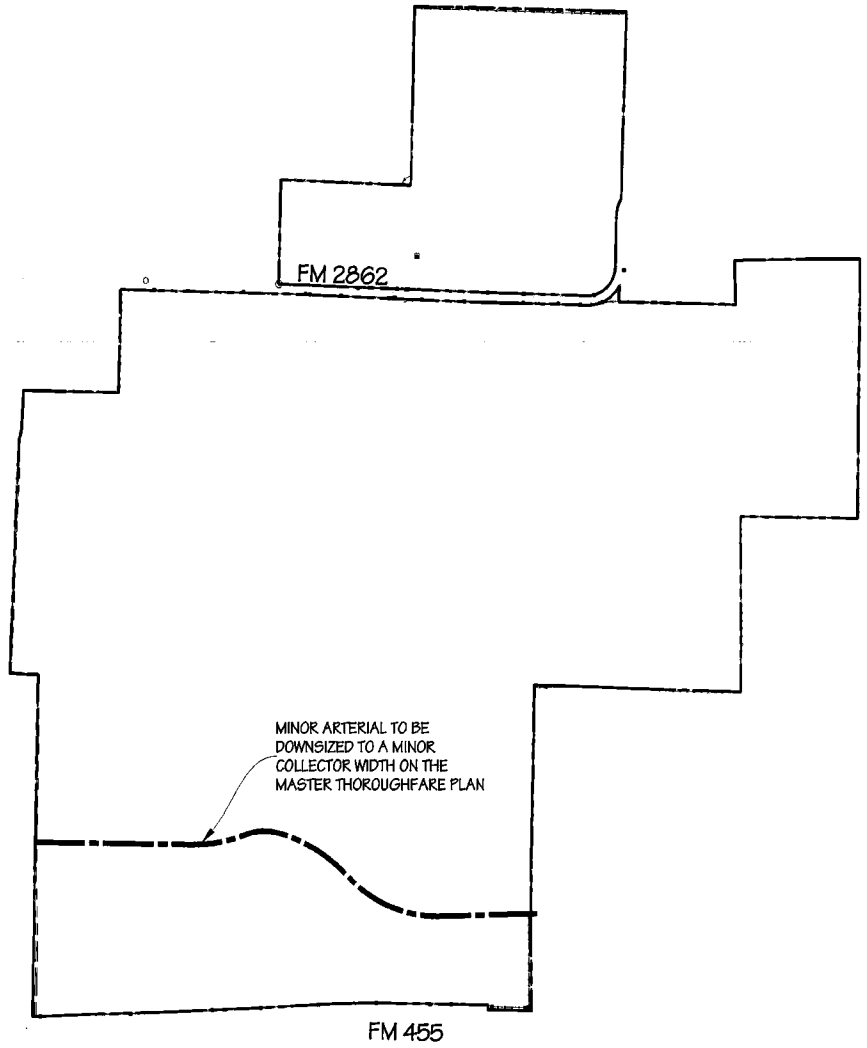



Note:

1. Downsizing of the roadway shown to a minor collector width is subject to results of a traffic impact analysis.

EXHIBIT H-1 - THOROUGHFARE REVISION

SHERLEY FARMS

CITY OF ANNA, COLLIN COUNTY, TEXAS
G. MORRISON SURVEY ~ ABSTRACT NO. 559

OCTOBER OF 2024

SPIARS ENGINEERING & SURVEYING
765 Custer Road, Suite 100 • Plano, TX 75075 • 972.422.0077
TBPE No F-2121 • TBLPS No. F-10043100 • www.spiarseng.com

Exhibit I

Conceptual Amenity Depictions



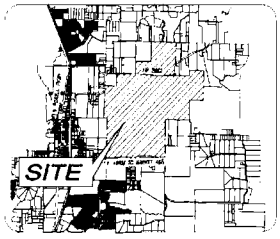

LOCATION MAP / KEY MAP

EXHIBIT I - CONCEPTUAL AMENITY DEPICTIONS

SHERLEY FARMS

CITY OF ANNA, COLLIN COUNTY, TEXAS
G. MORRISON SURVEY ~ ABSTRACT NO. 559

NOVEMBER OF 2024

Exhibit J

Trail and Open Space Improvements

Public Open Space Summary		
	Central Green	±74 ac
	Pocket Parks	±10 ac
	Landscaped Drainage Areas	±15 ac
	Miscellaneous	±18 ac
	Total	±117 ac
Note: Pocket Park locations and sizes are conceptual and final location and size will be determined at platting		

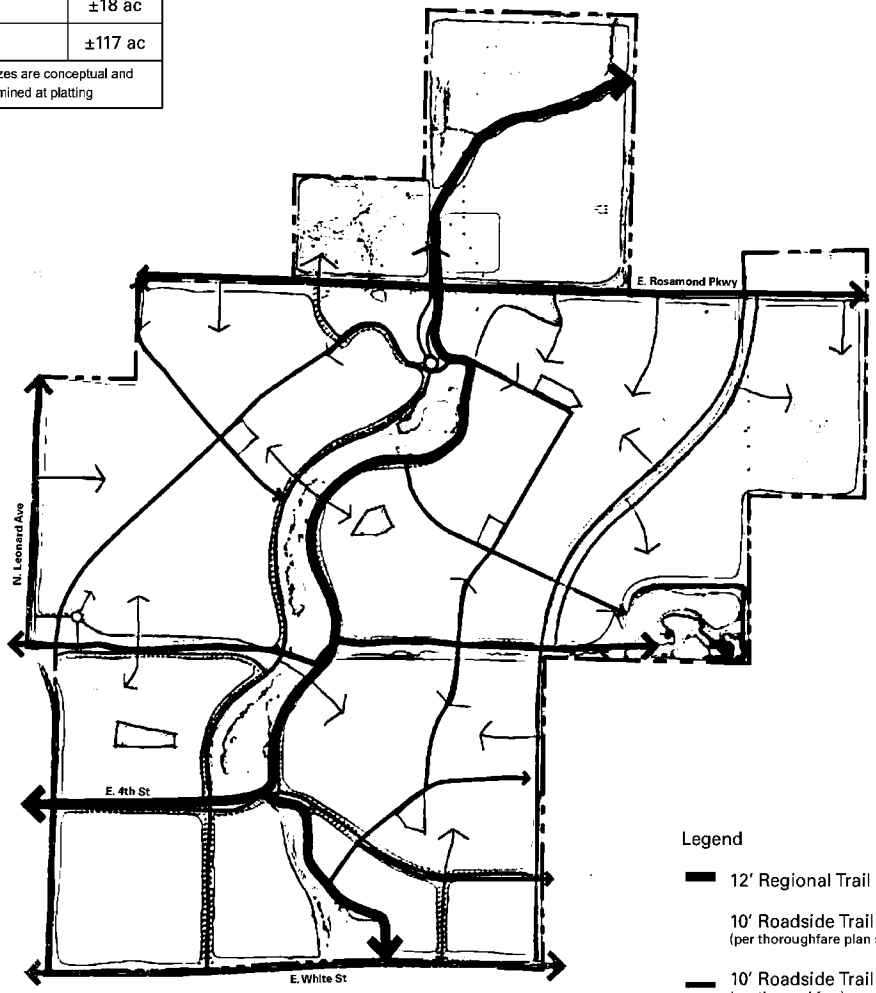

Legend

- 12′ Regional Trail
- 10′ Roadside Trail (per thoroughfare plan street sections)
- 10′ Roadside Trail (per thoroughfare)
- 8′ Community Trail
- 6′ Neighborhood Trail

Note:
Precise regional trail alignment is contingent on site conditions and land ownership

0 800′ 1600′

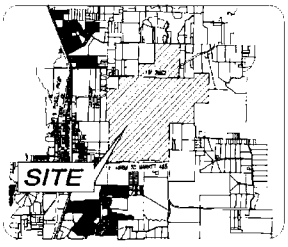

LOCATION MAP / KEY MAP

The information shown is based on the best information available and is subject to change without notice.

EXHIBIT J - TRAILS AND OPEN SPACE IMPROVEMENTS

SHERLEY FARMS

CITY OF ANNA, COLLIN COUNTY, TEXAS
G. MORRISON SURVEY ~ ABSTRACT NO. 559

DECEMBER OF 2024

Exhibit K

PID Bonds Financial Summary

City of Anna, Texas **For illustration purposes only**

Sherley Farms Public Improvement District

PROPOSED DEVELOPMENT PLAN

TOTAL SHERLEY FARMS IMPROVEMENT DISTRICT

Category	No. of Units	*Expected* Finished Lot Unit Value	*Expected* Build Out Unit Value	*Expected* Finished Lots Value	*Expected* Build Out Value
Townhomes (Tellus)	120	$ 62,500	$ 250,000	$ 7,500,000	$ 30,000,000
SF 40' (Tellus)	638	96,000	384,000	61,248,000	244,992,000
SF 50' (Tellus)	740	120,000	480,000	88,800,000	355,200,000
SF 60' (Tellus)	740	144,000	576,000	106,560,000	426,240,000
SF 70' (Tellus)	190	168,000	672,000	31,920,000	127,680,000
SF 1/2 ac. (Tellus)	150	264,000	1,056,000	39,600,000	158,400,000
Townhomes (Sherley Partners)	80	75,000	300,000	6,000,000	24,000,000
Cottage Homes (Sherley Partners)	55	62,500	250,000	3,437,500	13,750,000
SF (Sherley Partners)	7	250,000	1,000,000	1,750,000	7,000,000
MF (Sherley Partners)	400	12,500	200,000	5,000,000	80,000,000
Retail/COMM (Sherley Partners)	260,000	25.36	329.62	6,592,308	85,700,000
				$ 358,407,808	$ 1,552,962,000
Townhomes Unit Weighted Average				*$67,500*	*$270,000*
Single Family Unit Weighted Average				*$133,825*	*$535,299*

Notes:

Information provided by the Developers on 9/25/2024 and 10/1/2024. Subject to change.

2024 - 202400015903 12/23/2024 11:23 AM Page 127 of 134

City of Anna, Texas For illustration purposes only
Sherley Farms Public Improvement District
PROJECT DEBT CAPACITY SUMMARY

	SINGLE-FAMILY SUBZONE PID BONDS[1]	COMMERCIAL SUBZONE PID BONDS[2]	TOTAL
SOURCES OF FUNDS			
Estimated Par Amount of Bonds	$ 235,343,000	$ 9,273,000	$ 244,616,000
Total Sources of Funds	$ 235,343,000	$ 9,273,000	$ 244,616,000
USES OF FUNDS			
Project Fund (Bond Proceeds PID Projects)	$ 193,911,752	$ 7,660,047	$ 201,571,799
Capitalized Interest Fund[3]	-	-	-
Debt Service Reserve Fund[4]	17,896,948	685,653	18,582,601
Financing Costs & Admin Fees[5]	23,534,300	927,300	24,461,600
Total Uses of Funds	$ 235,343,000	$ 9,273,000	$ 244,616,000
Expected Value-to-Lien per Parcel at Bond Issuance	1.47x [6]	1.25x [7]	1.47x
Assumed Bond Interest Rate[8]	6.10%	6.10%	6.10%
Average Annual Installment as Tax Rate Equivalent	$1.3500	$0.4777	
Less: TIRZ Adjustment as Tax Rate Equivalent[9]	($0.2536)	($0.2536)	
Net Average Annual Installment as Tax Rate Equivalent	$1.0964	$0.2241	
Term of Bonds	30 years	30 years	30 years
City TIRZ Participation Rate as % of Tax Rate	50%	50%	50%
Number of Benefited Units	2,720	400 MF Units 260,000 COMM Sq Ft	
PID Assessment per Benefited Unit	$86,523	$11,193 per MF Unit $18.45 per COMM Sq Ft	
Project Funds per Benefited Unit	$71,291	$9,246 per MF Unit $15.24 per COMM Sq Ft	
City PID Fee per SF Unit	($3,400)	$0	
Net Project Funds per Benefited Unit	$67,891	$9,246 per MF Unit $15 per MF Unit	

Notes:
(1) Single-Family Subzone includes all parcels (incl. Townhomes and Cottages) except Multi-Family and Retail/Commercial.
(2) Commercial Subzone only includes Multi-family and Retail/Commercial Parcels. Does not include townhomes and cottages.
(3) Assumes no use of capitalized interest, subject to change. Use of Cap-I reduces project funds generated thorugh bond proceeds.
(4) Assumes to be the max annual debt service payment. Not to exceed the IRS' three-prong test.
(5) For illustration and discussion purposes only; subject to change. Assumes 10% of par amount.
(6) Assumes no appraisal discounts for illustration purposes only; subject to change.
(7) Assumes no appraisal discounts for illustration purposes only; subject to change. Assumed to be a minimum of 1.25:1 ratio.
(8) For illustration purposes only; subject to change at any time.
(9) Including TIRZ admin expense.

City of Anna, Texas For illustration purposes only
Sherley Farms Public Improvement District
PROJECTED TAX STATEMENT - SINGLE-FAMILY SUBZONE

2024 - 20240001159039 12/23/2024 11:23 AM Page 129 of 134

***Projected* Tax Statement - Single-Family Subzone**

	2024 Tax Rate	Tax Levy on $270,000 Avg. Townhome	Tax Levy on $535,299 Avg. SF Home	Tax Levy on $250,000 Cottage Home
City of Anna	$ 0.5072	$ 1,369.44	$ 2,715.04	$ 1,268.00
Collin County	0.1493	403.23	799.43	373.36
Collin County Community College District	0.0812	219.29	434.77	203.05
Anna Independent School District	1.2580	3,396.60	6,734.06	3,145.00
Total Tax Rate	**$ 1.9958**	**$ 5,388.56**	**$ 10,683.30**	**$ 4,989.41**
GROSS Avg. Annual Installment as a Tax Rate Equivalent/Levy[(1)]	$ 1.3500	$ 3,644.89	$ 7,226.32	$ 3,374.90
Total GROSS Overlapping Tax Rate Equivalent/Levy plus Special Assessment	**$ 3.3457**	**$ 9,033.45**	**$ 17,909.62**	**$ 8,364.31**
Projected TIRZ Credit as Tax Rate Equivalent/Levy [(2)]	$ (0.2536)	$ (684.72)	$ (1,357.52)	$ (634.00)
Total Overlapping Tax Rate Equivalent/Levy *after Projected TIRZ Credit*	**$ 3.0921**	**$ 8,348.73**	**$ 16,552.11**	**$ 7,730.31**
Net Avg. Annual Installment as Tax Rate Equivalent/Levy	*$ 1.0964*	*$ 2,960.17*	*$ 5,868.81*	*$ 2,740.90*

(1) Inclusive of principal, interest, additonal interest and admin levies. Not to exceed $1.35 per Development Agreement.
(2) TIRZ credit calculation as a tax rate equivalent includes the budgeted TIRZ Admin Expense.

City of Anna, Texas **For illustration purposes only**

Sherley Farms Public Improvement District

PROJECTED TAX STATEMENT - COMMERCIAL SUBZONE

***Projected* Tax Statement - Commercial Subzone**

	2024 Tax Rate	Tax Levy on $200,000 MF Unit	Tax Levy on Sq. Ft. Retail/COMM
City of Anna	$ 0.5072	$ 1,014.40	$ 1.67
Collin County	0.1493	298.69	0.49
Collin County Community College District	0.0812	162.44	0.27
Anna Independent School District	1.2580	2,516.00	4.15
Total Tax Rate	**$ 1.9958**	**$ 3,991.53**	**$ 6.58**
GROSS Avg. Annual Installment as a Tax Rate Equivalent/Levy[1]	$ 0.4777	$ 955.41	$ 1.57
Total GROSS Overlapping Tax Rate Equivalent/Levy plus Special Assessment	**$ 2.4735**	**$ 4,946.93**	**$ 8.15**
***Projected TIRZ Credit as Tax Rate Equivalent/Levy*[2]**	$ (0.2536)	$ (507.20)	$ (0.84)
Total Overlapping Tax Rate Equivalent/Levy *after Projected TIRZ Credit*	**$ 2.2199**	**$ 4,439.73**	**$ 7.32**
Net Avg. Annual Installment as Tax Rate Equivalent/Levy	*$ 0.2241*	*$ 448.21*	*$ 0.74*

(1) Inclusive of principal, interest, additonal interest and admin levies. Not to exceed $1.35 per Development Agreement.

(2) TIRZ credit calculation as a tax rate equivalent includes the budgeted TIRZ Admin Expense.

2024 - 202400159039 12/23/2024 11:23 AM Page 130 of 134

City of Anna, Texas For illustration purposes only

Sherley Farms Public Improvement District

DEBT CAPACITY - 50% CITY TIRZ - SINGLE-FAMILY SUBZONE

Bond Year	Single-Family Subzone Special Assessment Revenue Bonds Principal	Interest[1]	Additional Interest Levy[2]	Administrative Levy[3]	**TOTAL LEVY**	***Total Levy as Tax Rate Equivalent***	Bond Year	GROSS PID LEVY	TIRZ CREDIT	***TIRZ Share as Tax Rate Equivalent***	NET PID LEVY	***Net PID Levy as Tax Rate Equivalent***
1	$ 2,775,000	$ 14,355,923	$ 1,176,715	$ 420,000	**$ 18,727,638**	***$ 1.3500***	1	$ 18,727,638	$ 3,518,096	***$ 0.2536***	$ 15,209,542	***$ 1.0964***
2	2,950,000	14,186,648	1,162,840	428,400	**18,727,888**	***1.3500***	2	18,727,888	3,518,096	***0.2536***	15,209,792	***1.0964***
3	3,136,000	14,006,698	1,148,090	436,968	**18,727,756**	***1.3500***	3	18,727,756	3,518,096	***0.2536***	15,209,660	***1.0964***
4	3,334,000	13,815,402	1,132,410	445,707	**18,727,519**	***1.3500***	4	18,727,519	3,518,096	***0.2536***	15,209,423	***1.0964***
5	3,545,000	13,612,028	1,115,740	454,622	**18,727,390**	***1.3500***	5	18,727,390	3,518,096	***0.2536***	15,209,293	***1.0964***
6	3,770,000	13,395,783	1,098,015	463,714	**18,727,512**	***1.3500***	6	18,727,512	3,518,096	***0.2536***	15,209,416	***1.0964***
7	4,010,000	13,165,813	1,079,165	472,988	**18,727,966**	***1.3500***	7	18,727,966	3,518,096	***0.2536***	15,209,870	***1.0964***
8	4,265,000	12,921,203	1,059,115	482,448	**18,727,766**	***1.3500***	8	18,727,766	3,518,096	***0.2536***	15,209,670	***1.0964***
9	4,537,000	12,661,038	1,037,790	492,097	**18,727,925**	***1.3500***	9	18,727,925	3,518,096	***0.2536***	15,209,829	***1.0964***
10	4,826,000	12,384,281	1,015,105	501,939	**18,727,325**	***1.3499***	10	18,727,325	3,518,096	***0.2536***	15,209,228	***1.0963***
11	5,135,000	12,089,895	990,975	511,978	**18,727,848**	***1.3500***	11	18,727,848	3,518,096	***0.2536***	15,209,751	***1.0964***
12	5,463,000	11,776,660	965,300	522,217	**18,727,177**	***1.3499***	12	18,727,177	3,518,096	***0.2536***	15,209,081	***1.0963***
13	5,813,000	11,443,417	937,985	532,662	**18,727,064**	***1.3499***	13	18,727,064	3,518,096	***0.2536***	15,208,967	***1.0963***
14	6,186,000	11,088,824	908,920	543,315	**18,727,059**	***1.3499***	14	18,727,059	3,518,096	***0.2536***	15,208,962	***1.0963***
15	6,584,000	10,711,478	877,990	554,181	**18,727,649**	***1.3500***	15	18,727,649	3,518,096	***0.2536***	15,209,553	***1.0964***
16	7,007,000	10,309,854	845,070	565,265	**18,727,189**	***1.3499***	16	18,727,189	3,518,096	***0.2536***	15,209,092	***1.0963***
17	7,458,000	9,882,427	810,035	576,570	**18,727,032**	***1.3499***	17	18,727,032	3,518,096	***0.2536***	15,208,936	***1.0963***
18	7,939,000	9,427,489	772,745	588,101	**18,727,335**	***1.3499***	18	18,727,335	3,518,096	***0.2536***	15,209,239	***1.0963***
19	8,451,000	8,943,210	733,050	599,863	**18,727,123**	***1.3499***	19	18,727,123	3,518,096	***0.2536***	15,209,027	***1.0963***
20	8,997,000	8,427,699	690,795	611,861	**18,727,355**	***1.3500***	20	18,727,355	3,518,096	***0.2536***	15,209,258	***1.0964***
21	9,579,000	7,878,882	645,810	624,098	**18,727,790**	***1.3500***	21	18,727,790	3,518,096	***0.2536***	15,209,693	***1.0964***
22	10,198,000	7,294,563	597,915	636,580	**18,727,058**	***1.3499***	22	18,727,058	3,518,096	***0.2536***	15,208,961	***1.0963***
23	10,859,000	6,672,485	546,925	649,311	**18,727,721**	***1.3500***	23	18,727,721	3,518,096	***0.2536***	15,209,625	***1.0964***
24	11,563,000	6,010,086	492,630	662,298	**18,728,014**	***1.3500***	24	18,728,014	3,518,096	***0.2536***	15,209,917	***1.0964***
25	12,312,000	5,304,743	434,815	675,544	**18,727,102**	***1.3499***	25	18,727,102	3,518,096	***0.2536***	15,209,005	***1.0963***
26	13,111,000	4,553,711	373,255	689,055	**18,727,021**	***1.3499***	26	18,727,021	3,518,096	***0.2536***	15,208,924	***1.0963***
27	13,963,000	3,753,940	307,700	702,836	**18,727,476**	***1.3500***	27	18,727,476	3,518,096	***0.2536***	15,209,379	***1.0964***
28	14,871,000	2,902,197	237,885	716,892	**18,727,974**	***1.3500***	28	18,727,974	3,518,096	***0.2536***	15,209,878	***1.0964***
29	15,838,000	1,995,066	163,530	731,230	**18,727,826**	***1.3500***	29	18,727,826	3,518,096	***0.2536***	15,209,730	***1.0964***
30	16,868,000	1,028,948	84,340	745,855	**18,727,143**	***1.3499***	30	18,727,143	3,518,096	***0.2536***	15,209,046	***1.0963***
	$ 235,343,000	$ 286,000,391	$ 23,442,655	$ 17,038,593	**$ 561,824,639**			$ 561,824,639	$ 105,542,893		$ 456,281,746	

(1) Assumes an interest rate of 6.10% for discussion purposes only, subject to change.

(2) Calculated at 0.5% of outstanding bonds.

(3) For illustration purposes only, subject to change after input from PID/TIRZ Administrator. Assumes PID and TIRZ administrative expenses for seven PID improvement areas.

2024 - 20240001590039 12/23/2024 11:23 AM Page 131 of 134

City of Anna, Texas — For illustration purposes only

Sherley Farms Public Improvement District

DEBT CAPACITY - 50% CITY TIRZ - COMMERCIAL SUBZONE

Bond Year	Commercial Subzone Special Assessment Revenue Bonds Principal	Interest[1]	Additional Interest Levy[2]	Administrative Levy[3]	**TOTAL LEVY**	***Total Levy as Tax Rate Equivalent***	Bond Year	GROSS PID LEVY	TIRZ CREDIT	***TIRZ Share as Tax Rate Equivalent***	NET PID LEVY	***Net PID Levy as Tax Rate Equivalent***
1	$ 120,000	$ 565,653	$ 46,365	$ 60,000	**$ 792,018**	***$ 0.4780***	1	$ 792,018	$ 420,215	***$ 0.2536***	$ 371,803	***$ 0.2244***
2	126,000	558,333	45,765	61,200	**791,298**	***0.4775***	2	791,298	420,215	***0.2536***	371,083	***0.2239***
3	133,000	550,647	45,135	62,424	**791,206**	***0.4775***	3	791,206	420,215	***0.2536***	370,991	***0.2239***
4	141,000	542,534	44,470	63,672	**791,676**	***0.4778***	4	791,676	420,215	***0.2536***	371,461	***0.2242***
5	149,000	533,933	43,765	64,946	**791,644**	***0.4778***	5	791,644	420,215	***0.2536***	371,429	***0.2242***
6	157,000	524,844	43,020	66,245	**791,109**	***0.4774***	6	791,109	420,215	***0.2536***	370,894	***0.2238***
7	167,000	515,267	42,235	67,570	**792,072**	***0.4780***	7	792,072	420,215	***0.2536***	371,857	***0.2244***
8	176,000	505,080	41,400	68,921	**791,401**	***0.4776***	8	791,401	420,215	***0.2536***	371,186	***0.2240***
9	186,000	494,344	40,520	70,300	**791,164**	***0.4775***	9	791,164	420,215	***0.2536***	370,948	***0.2239***
10	197,000	482,998	39,590	71,706	**791,294**	***0.4775***	10	791,294	420,215	***0.2536***	371,078	***0.2239***
11	209,000	470,981	38,605	73,140	**791,726**	***0.4778***	11	791,726	420,215	***0.2536***	371,510	***0.2242***
12	221,000	458,232	37,560	74,602	**791,394**	***0.4776***	12	791,394	420,215	***0.2536***	371,179	***0.2240***
13	234,000	444,751	36,455	76,095	**791,301**	***0.4776***	13	791,301	420,215	***0.2536***	371,085	***0.2240***
14	248,000	430,477	35,285	77,616	**791,378**	***0.4776***	14	791,378	420,215	***0.2536***	371,163	***0.2240***
15	263,000	415,349	34,045	79,169	**791,563**	***0.4777***	15	791,563	420,215	***0.2536***	371,348	***0.2241***
16	279,000	399,306	32,730	80,752	**791,788**	***0.4778***	16	791,788	420,215	***0.2536***	371,573	***0.2242***
17	296,000	382,287	31,335	82,367	**791,989**	***0.4780***	17	791,989	420,215	***0.2536***	371,774	***0.2244***
18	313,000	364,231	29,855	84,014	**791,100**	***0.4774***	18	791,100	420,215	***0.2536***	370,885	***0.2238***
19	332,000	345,138	28,290	85,695	**791,123**	***0.4774***	19	791,123	420,215	***0.2536***	370,908	***0.2238***
20	353,000	324,886	26,630	87,409	**791,925**	***0.4779***	20	791,925	420,215	***0.2536***	371,709	***0.2243***
21	374,000	303,353	24,865	89,157	**791,375**	***0.4776***	21	791,375	420,215	***0.2536***	371,160	***0.2240***
22	397,000	280,539	22,995	90,940	**791,474**	***0.4777***	22	791,474	420,215	***0.2536***	371,259	***0.2241***
23	422,000	256,322	21,010	92,759	**792,091**	***0.4780***	23	792,091	420,215	***0.2536***	371,876	***0.2244***
24	447,000	230,580	18,900	94,614	**791,094**	***0.4774***	24	791,094	420,215	***0.2536***	370,879	***0.2238***
25	475,000	203,313	16,665	96,506	**791,484**	***0.4777***	25	791,484	420,215	***0.2536***	371,269	***0.2241***
26	505,000	174,338	14,290	98,436	**792,064**	***0.4780***	26	792,064	420,215	***0.2536***	371,849	***0.2244***
27	536,000	143,533	11,765	100,405	**791,703**	***0.4778***	27	791,703	420,215	***0.2536***	371,488	***0.2242***
28	569,000	110,837	9,085	102,413	**791,335**	***0.4776***	28	791,335	420,215	***0.2536***	371,120	***0.2240***
29	605,000	76,128	6,240	104,461	**791,829**	***0.4779***	29	791,829	420,215	***0.2536***	371,614	***0.2243***
30	643,000	39,223	3,215	106,551	**791,989**	***0.4780***	30	791,989	420,215	***0.2536***	371,773	***0.2244***
	$ 9,273,000	$ 11,127,437	$ 912,085	$ 2,434,085	**$ 23,746,607**			$ 23,746,607	$ 12,606,456		$ 11,140,151	

(1) Assumes an interest rate of 6.10% for discussion purposes only, subject to change.

(2) Calculated at 0.5% of outstanding bonds.

(3) For illustration purposes only, subject to change after input from PID/TIRZ Administrator. Assumes PID and TIRZ administrative expenses for one PID improvement area.

2024 - 20240001590039 12/23/2024 11:23 AM Page 132 of 134

City of Anna, Texas **For illustration purposes only**

Sherley Farms Public Improvement District

PROJECT IMPACT ON THE CITY (AD VALOREM PROPERTY TAXES) - 50% TIRZ Scenario

	No. of Units	Average Build Out Unit Value	Average Build Out Total Value	*At 2024 Rate* Gross City Taxes Generated per Unit	*50%* City Taxes Deposited in TIRZ Fund per Unit	Net City Taxes Generated per Unit	*At 2024 Rate* Gross City Taxes Generated at Build Out	*50%* City Taxes Deposited in TIRZ Fund at Build Out	Net City Taxes Generated at Build Out
Proposed Single Family, Townhomes & Cottages	2,720	$510,023	$1,387,262,000	$2,587	($1,293)	$1,293	$7,036,193	($3,518,096)	$3,518,096
Proposed Multi Family	400	$200,000	$80,000,000	$1,014	($507)	$507	$405,760	($202,880)	$202,880
Proposed Retail & Commercial	260,000	$329.62	$85,700,000	$1.67	($0.84)	$0.84	$434,670	($217,335)	$217,335
Total			$1,552,962,000				$7,876,623	($3,938,312)	$3,938,312

	No. of Units	Average Build Out Unit Value	Average Build Out Total Value	*Proposed Non TIRZ* Average PID Assessment Annual Installment per Unit	City Taxes used for PID Bonds Debt Service per Unit	Total Funds for Debt Service and PID/TIRZ Admin per Unit	*Proposed Non TIRZ* Average PID Assessment Annual Installment at Build Out	City Taxes used for PID Bonds Debt Service at Build Out	Total Funds for Debt Service and PID Admin at Build Out
Proposed Single Family, Townhomes & Cottages	2,720	$510,023	$1,387,262,000	$5,592	$1,293	$6,885	$15,209,392	$3,518,096	$18,727,488
Proposed Multi Family	400	$200,000	$80,000,000	$448	$507	$955	$179,282	$202,880	$382,162
Proposed Retail & Commercial	260,000	$330	$85,700,000	$0.74	$0.84	$1.57	$192,056	$217,335	$409,391
Total			$1,552,962,000				$15,580,730	$3,938,312	$19,519,042

2024 - 20240001159039 12/23/2024 11:23 AM Page 133 of 134

Collin County
Honorable Stacey Kemp
Collin County Clerk

Instrument Number: 2024000159039

eRecording - Real Property

AGREEMENT

Recorded On: December 23, 2024 11:23 AM

Number of Pages: 134

" Examined and Charged as Follows: "

Total Recording: $553.00

********** **THIS PAGE IS PART OF THE INSTRUMENT** **********
Any provision herein which restricts the Sale, Rental or use of the described REAL PROPERTY because of color or race is invalid and unenforceable under federal law.

File Information:

Document Number:	2024000159039
Receipt Number:	20241223000117
Recorded Date/Time:	December 23, 2024 11:23 AM
User:	Patricia B
Station:	cck100

Record and Return To:

CSC

STATE OF TEXAS
COUNTY OF COLLIN

I hereby certify that this Instrument was FILED **In the File Number sequence on the date/time printed hereon, and was duly** RECORDED **in the Official Public Records of Collin County, Texas.**

Honorable Stacey Kemp
Collin County Clerk
Collin County, TX

Option 1: As Presented at the August 3, 2026 P&Z Meeting

Blue Text – staff commentary

Black Text – as currently written in the PD

Green underlined Text – added text

~~Red Strikethrough Text~~ – removed text

Edit of Section 4 Amenities to be consistent with the Development Agreement and be clear regarding the completion timing:

Section 4. Amenities

> […] Construction for this amenity center shall commence prior to the issuance of the ~~300th~~ 250th single family building permit and shall be complete twenty-four (24) months after the issuance of the 250th building permit.

Editing of Section 7 includes:

1. Fixing the lot types to tie accurately to the categories.
2. Allowing cementitious fiberboard as a masonry product.
3. Providing clarification on the building articulation categories.
4. Increasing the minimum porch size to count as one of the building articulations.
5. Removing dormer where duplicated in the list.

Section 7. Site Design Requirements

(1) FOR LOT TYPES A (~~1/2 acre~~ 100' lots), B (~~100'~~ 90' lots), C (~~90'~~ 80' lots) and D (~~80'~~ 70' lots):

i. The exterior facades of a main building or structure, excluding glass windows and doors, shall be constructed of seventy-five percent (75%) masonry (brick, stone, cementitious fiber board, or stucco). ~~Cementitious fiber board is considered masonry, but may only constitute fifty percent (50%) of the area for stories other than the first story.~~ Cementitious fiber board may also be used for architectural features, including window box-outs, bay windows, roof dormers, garage door headers, columns, and chimneys. Cementitious fiber board may also be used for other architectural features as approved by the Director of Development Services.

~~ii. To promote architectural variety, a maximum of 25% of the homes on lot types A, B, C, and D may have up to 100% cementitious fiber board ("Craftsman Style" homes) so long as the following conditions are met:~~

- ~~Wrap around covered porches are provided on the first floor that total a minimum of 150 square feet.~~
- ~~No more than two (2) paint colors may be used on the exterior of the house and they must be earth tones that complement each other (main house vs. trim).~~
- ~~The surface area of windows surrounded completed by brick may be included within the computation of the exterior brick, brick veneer, stone, or stone veneer wall area of a residence.~~

(2) FOR LOT TYPES E (70' lots), F (60' lots), G (50' lots), H (40' lots):

i. The exterior facades of a main building or structure, excluding glass windows and doors, shall be constructed of fifty percent (50%) masonry (brick, stone, cementitious fiber board, or stucco). ~~Cementitious fiber board is considered masonry, but may only constitute fifty percent (50%) of the area for stories other than the first story.~~ Cementitious fiber board may also be used for architectural features, including window box-outs, bay windows, roof dormers, garage door headers, columns, and chimneys. Cementitious fiber board may also be used for other architectural features as approved by the Director of Development Services.

~~ii. To promote architectural variety, a maximum of 35% of the homes on lot types E, F, G and H may have up to 100% cementitious fiberboard ("Craftsman Style" homes) so long as the following conditions are met:~~

- ~~Wrap around covered porches are provided that total a minimum of 150 square feet.~~
- ~~No more than two (2) paint colors may be used on the exterior of the house and they must be earth tones that complement each other (main house vs. trim)~~
- ~~The surface area of windows surrounded completely by brick may be included within the computation of the exterior brick, brick veneer, stone, or stone veneer wall area of a residence.~~

[…]

(11) Building Articulation. At least four facade articulation techniques from one or more of the following categories are required on each single-family dwelling to add variety and interest to a building. The following features are acceptable techniques of exterior articulation.

(A) One of the following:
- A base course or plinth course;

- Banding, moldings, or stringcourses;
- Quoins;
- Oriels;
- Cornices;
- Arches;
- Balconies;
- Brackets;
- Shutters;
- Keystones;
- Dormers; or
- Louvers as part of the exterior wall construction. (Quoins and banding shall wrap around the corners of the structure for at least two feet.)
- Carriage style garage doors
- Decorative brick patterning
- Architectural pillars or posts
- Bay Window facing the street
- Brick or Stone chimney on the exterior wall
- Stone Accents
- Covered front porches (minimum (60) square feet covered by main roof or an architectural extension) May encroach into the front setback up to ten feet (10') provided there is a minimum five feet (5') of the front yard space from the back of sidewalk to the front facing façade of the porch. Minimum porch depth is five feet (5').
- Cupulas or turrets
- ~~Dormers or~~ Gables
- Roof accent upgrades (e.g. metal, tile, slate, solar tiles)
- Recessed entries a minimum of three (3) feet deeper than main front façade
- Greater than 8:12 primary roof pitch, or variable roof pitches
- Transom windows
- Shutters
- Masonry Arches
- Mixed Masonry patterns
- Coach lights at entrances
- Decorative attic or gable feature, minimum two (2) square feet in size (e.g. vent, window, brick detail)
- Decorative driveway paving (e.g. salt finish, exposed aggregate, or other treatments approved by City Building Official)

(B) Horizontal banding continues the length of the wall that faces a street or other similar highly visible areas.

(C) Front porch of at least ~~50~~ 60 square feet.

(D) The installation of at least two (2) coach lights.

(E) Other techniques for building articulation can be substituted if approved by the Director.

[…]

(d) Single-Family Attached , Garden Home, Two-Family Dwelling and Cottage Home Standards

(1) FOR LOT TYPES I (Single-Family Attached), J (Garden Homes), Two-Family Dwelling and Cottage Homes:

i. The exterior facades of a main building or structure, excluding glass windows and doors, shall be constructed of fifty percent (50%) masonry (brick, stone, cementitious fiber board, or stucco). ~~but may only constitute fifty percent (50%) of the area for stories other than the first story~~. Cementitious fiber board may also be used for architectural features, including window box-outs, bay windows, roof dormers, garage door headers, columns, and chimneys. Cementitious fiber board may also be used for other architectural features as approved by the Director of Development Services.

Commented [LM1]: Applicant slides??

~~ii. To promote architectural variety the Garden Homes and Cottage Homes may have up to 100% cementitious fiberboard ("Craftsman Style" homes) so long as the following conditions are met:~~

- ~~Covered porches are provided that total a minimum of 150 square feet.~~
- ~~No more than two (2) paint colors may be used on the exterior of the house and they must be earth tones that complement each other (main house vs. trim)~~
- ~~The surface area of windows surrounded completely by brick may be included within the computation of the exterior brick, brick veneer, stone, or stone veneer wall area of a residence.~~

(2) Building Articulation. At least two facade articulation techniques from one or more of the following categories are required on each detached or attached residential dwelling unit to add variety and interest to a building. The following features are acceptable techniques of exterior articulation.

(A) One of the following:

- A base course or plinth course;
- Banding, moldings, or stringcourses;
- Quoins;
- Oriels;
- Cornices;
- Arches;
- Balconies;

- Brackets;
- Shutters;
- Keystones;
- Dormers; or
- Louvers as part of the exterior wall construction. (Quoins and banding shall wrap around the corners of the structure for at least two feet.)
- Carriage style garage doors
- Decorative brick patterning
- Architectural pillars or posts
- Bay Window facing the street
- Brick or Stone chimney on the exterior wall
- Stone Accents
- Covered front porches (minimum (60) square feet covered by main roof or an architectural extension) May encroach into the front setback up to ten feet (10') provided there is a minimum five feet (5') of the front yard space from the back of sidewalk to the front facing façade of the porch. Minimum porch depth is five feet (5').
- Cupulas or turrets
- ~~Dormers or~~ Gables
- Roof accent upgrades (e.g. metal, tile, slate, solar tiles)
- Recessed entries a minimum of three (3) feet deeper than main front façade
- Greater than 8:12 primary roof pitch, or variable roof pitches
- Transom windows
- Shutters
- Masonry Arches
- Mixed Masonry patterns
- Coach lights at entrances
- Decorative attic or gable feature, minimum two (2) square feet in size (e.g. vent, window, brick detail)
- Decorative driveway paving (e.g. salt finish, exposed aggregate, or other treatments approved by City Building Official)

(B) Horizontal banding continuing the length of the wall that faces a street, or other similar highly visible areas.

(C) Front porch of at least ~~50~~ 60 square feet.

(D) The installation of at least two (2) coach lights.

(E) Other techniques for building articulation can be substituted if approved by the Director.

Editing of Section 8 is to provide clarification for fencing within side yards. This is a common question when the rear property line abuts the side property line of the neighboring lot. The reason for the zoning requirement is to ensure the adjacent property is given ample visibility when pulling out of their driveway.

Section 8. Zoning Landscaping Changes

Revise 9.046.d.2.B to read:

On all residential district corner lots where the rear lot line is opposed to a side lot line across an alley from that side lot line, no fence exceeding 30 inches in height if built of solid / view obstructing materials shall be constructed upon or within the side yard that is next to the street at a distance from the side building line greater than the minimum side yard requirement unless constructed of materials such as metal / wrought iron through which approaching traffic may be viewed from the opposing street (i.e. a View Fence), as indicated in Figure 11: Fence near Alley.

Figure 11: Fence near Alley

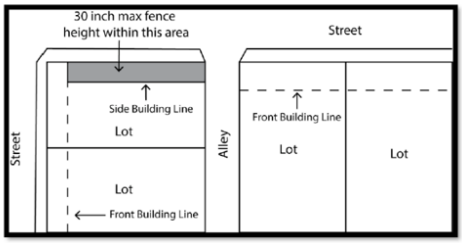

Revise 9.046.d.2.C to read:

On all residential district corner lots that are key lots, the corner lot shall have a side yard setback line that is the same as the front building line of the lot that it backs up to. If a fence is to encroach into the side yard setback of the Key Lot then it may not ~~on both streets, unless that key lot is separated from other lots by a dedicated street or alley. Where the lot lines are opposed to a side lot line of an adjoining lot, no fence~~ exceed~~ing~~ 30 inches in height if built of solid / view obstructing materials or shall be constructed of materials such as metal / wrought iron through which approaching traffic may be viewed from the opposing street (i.e a View Fence) ~~between the front building lines and the side yard line of the abutting lot,~~ as indicated in Figure 12: Fence at Corner (Key Lot).

Figure 12: Fence at Corner (Key Lot)

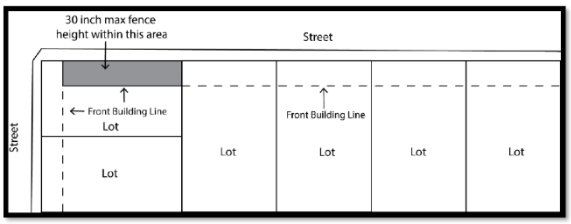

As Presented at the August 3, 2026 P&Z Meeting

Option 2: Developer's Modified Request

Blue Text – staff commentary

Black Text – as currently written in the PD

Green underlined Text – added text

~~Red Strikethrough Text~~ – removed text

Edit of Section 4 Amenities to be consistent with the Development Agreement and be clear regarding the completion timing:

Section 4. Amenities

> […] Construction for this amenity center shall commence prior to the issuance of the ~~300th~~ 250th single family building permit and shall be complete twenty-four (24) months after the issuance of the 250th building permit.

Editing of Section 7 includes:

1. Fixing the lot types to tie accurately to the categories.
2. Removing wrap-around covered porches as a requirement for 100% cementitious fiber board.
3. Increasing the minimum porch size to count as one of the building articulations.
4. Removing dormer where duplicated in the list.

Section 7. Site Design Requirements

(1) FOR LOT TYPES A (~~1/2 acre~~ 100' lots), B (~~100'~~ 90' lots), C (~~90'~~ 80' lots) and D (~~80'~~ 70' lots):

i. The exterior facades of a main building or structure, excluding glass windows and doors, shall be constructed of seventy-five percent (75%) brick, stone, or stucco). Cementitious fiber board is considered masonry, but may only constitute fifty percent (50%) of the area for stories other than the first story. Cementitious fiber board may also be used for architectural features, including window box-outs, bay windows, roof dormers, garage door headers, columns, and chimneys. Cementitious fiber board may also be used for other architectural features as approved by the Director of Development Services.

ii. To promote architectural variety, a maximum of 25% of the homes on lot types A, B, C, and D may have up to 100% cementitious fiber board ("Craftsman Style" homes) so long as the following conditions are met:

- ~~Wrap around covered porches are provided on the first floor that total a minimum of 150 square feet.~~

- No more than two (2) paint colors may be used on the exterior of the house and they must be earth tones that complement each other (main house vs. trim).
- The surface area of windows surrounded completed by brick may be included within the computation of the exterior brick, brick veneer, stone, or stone veneer wall area of a residence.

(2) FOR LOT TYPES E (70' lots), F (60' lots), G (50' lots), H (40' lots):

i. The exterior facades of a main building or structure, excluding glass windows and doors, shall be constructed of fifty percent (50%) brick, stone, or stucco). Cementitious fiber board is considered masonry, but may only constitute fifty percent (50%) of the area for stories other than the first story. Cementitious fiber board may also be used for architectural features, including window box-outs, bay windows, roof dormers, garage door headers, columns, and chimneys. Cementitious fiber board may also be used for other architectural features as approved by the Director of Development Services.

ii. To promote architectural variety, a maximum of 35% of the homes on lot types E, F, G and H may have up to 100% cementitious fiberboard ("Craftsman Style" homes) so long as the following conditions are met:

- ~~Wrap around covered porches are provided that total a minimum of 150 square feet.~~

- No more than two (2) paint colors may be used on the exterior of the house and they must be earth tones that complement each other (main house vs. trim)

- The surface area of windows surrounded completely by brick may be included within the computation of the exterior brick, brick veneer, stone, or stone veneer wall area of a residence.

[…]

(11) Building Articulation. At least four facade articulation techniques from one or more of the following categories are required on each single-family dwelling to add variety and interest to a building. The following features are acceptable techniques of exterior articulation.

(A) One of the following:
- A base course or plinth course;
- Banding, moldings, or stringcourses;
- Quoins;
- Oriels;

- Cornices;
- Arches;
- Balconies;
- Brackets;
- Shutters;
- Keystones;
- Dormers; or
- Louvers as part of the exterior wall construction. (Quoins and banding shall wrap around the corners of the structure for at least two feet.)
- Carriage style garage doors
- Decorative brick patterning
- Architectural pillars or posts
- Bay Window facing the street
- Brick or Stone chimney on the exterior wall
- Stone Accents
- Covered front porches (minimum (60) square feet covered by main roof or an architectural extension) May encroach into the front setback up to ten feet (10') provided there is a minimum five feet (5') of the front yard space from the back of sidewalk to the front facing façade of the porch. Minimum porch depth is five feet (5').
- Cupulas or turrets
- ~~Dormers or~~ Gables
- Roof accent upgrades (e.g. metal, tile, slate, solar tiles)
- Recessed entries a minimum of three (3) feet deeper than main front façade
- Greater than 8:12 primary roof pitch, or variable roof pitches
- Transom windows
- Shutters
- Masonry Arches
- Mixed Masonry patterns
- Coach lights at entrances
- Decorative attic or gable feature, minimum two (2) square feet in size (e.g. vent, window, brick detail)
- Decorative driveway paving (e.g. salt finish, exposed aggregate, or other treatments approved by City Building Official)

(B) Horizontal banding continues the length of the wall that faces a street or other similar highly visible areas.

(C) Front porch of at least ~~50~~ 60 square feet.

(D) The installation of at least two (2) coach lights.

(E) Other techniques for building articulation can be substituted if approved by the Director.

[…]

(d) Single-Family Attached , Garden Home, Two-Family Dwelling and Cottage Home Standards

(1) FOR LOT TYPES I (Single-Family Attached), J (Garden Homes), Two-Family Dwelling and Cottage Homes:

i. The exterior facades of a main building or structure, excluding glass windows and doors, shall be constructed of fifty percent (50%) masonry (brick, stone, cementitious fiber board, or stucco). ~~but may only constitute fifty percent (50%) of the area for stories other than the first story~~. Cementitious fiber board may also be used for architectural features, including window box-outs, bay windows, roof dormers, garage door headers, columns, and chimneys. Cementitious fiber board may also be used for other architectural features as approved by the Director of Development Services.

ii. To promote architectural variety the Garden Homes and Cottage Homes may have up to 100% cementitious fiberboard ("Craftsman Style" homes) so long as the following conditions are met:

- Covered porches are provided that total a minimum of ~~150~~ 60 square feet.
- No more than two (2) paint colors may be used on the exterior of the house and they must be earth tones that complement each other (main house vs. trim)
- The surface area of windows surrounded completely by brick may be included within the computation of the exterior brick, brick veneer, stone, or stone veneer wall area of a residence.

(2) Building Articulation. At least two facade articulation techniques from one or more of the following categories are required on each detached or attached residential dwelling unit to add variety and interest to a building. The following features are acceptable techniques of exterior articulation.

(A) One of the following:

- A base course or plinth course;
- Banding, moldings, or stringcourses;
- Quoins;
- Oriels;
- Cornices;
- Arches;
- Balconies;
- Brackets;
- Shutters;

- Keystones;
- Dormers; or
- Louvers as part of the exterior wall construction. (Quoins and banding shall wrap around the corners of the structure for at least two feet.)
- Carriage style garage doors
- Decorative brick patterning
- Architectural pillars or posts
- Bay Window facing the street
- Brick or Stone chimney on the exterior wall
- Stone Accents
- Covered front porches (minimum (60) square feet covered by main roof or an architectural extension) May encroach into the front setback up to ten feet (10') provided there is a minimum five feet (5') of the front yard space from the back of sidewalk to the front facing façade of the porch. Minimum porch depth is five feet (5').
- Cupulas or turrets
- ~~Dormers or~~ Gables
- Roof accent upgrades (e.g. metal, tile, slate, solar tiles)
- Recessed entries a minimum of three (3) feet deeper than main front façade
- Greater than 8:12 primary roof pitch, or variable roof pitches
- Transom windows
- Shutters
- Masonry Arches
- Mixed Masonry patterns
- Coach lights at entrances
- Decorative attic or gable feature, minimum two (2) square feet in size (e.g. vent, window, brick detail)
- Decorative driveway paving (e.g. salt finish, exposed aggregate, or other treatments approved by City Building Official)

(B) Horizontal banding continuing the length of the wall that faces a street, or other similar highly visible areas.

(C) Front porch of at least ~~50~~ 60 square feet.

(D) The installation of at least two (2) coach lights.

(E) Other techniques for building articulation can be substituted if approved by the Director.

Editing of Section 8 is to provide clarification for fencing within side yards. This is a common question when the rear property line abuts the side property line of the neighboring lot. The reason for the zoning requirement is to ensure the adjacent property is given ample visibility when pulling out of their driveway.

Section 8. Zoning Landscaping Changes

Revise 9.046.d.2.B to read:

On all residential district corner lots where the rear lot line is opposed to a side lot line across an alley from that side lot line, no fence exceeding 30 inches in height if built of solid / view obstructing materials shall be constructed upon or within the side yard that is next to the street at a distance from the side building line greater than the minimum side yard requirement unless constructed of materials such as metal / wrought iron through which approaching traffic may be viewed from the opposing street (i.e. a View Fence), as indicated in Figure 11: Fence near Alley.

Figure 11: Fence near Alley

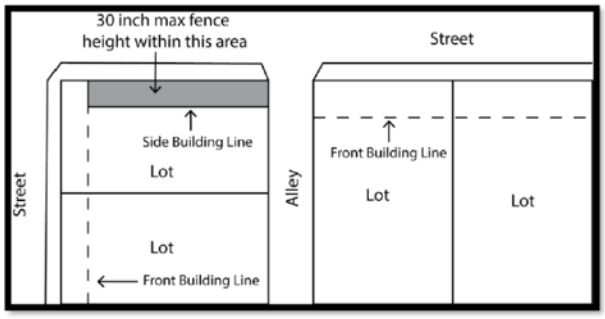

Revise 9.046.d.2.C to read:

On all residential district corner lots that are key lots, the corner lot shall have a side yard setback line that is the same as the front building line of the lot that it backs up to. If a fence is to encroach into the side yard setback of the Key Lot then it may not ~~on both streets, unless that key lot is separated from other lots by a dedicated street or alley. Where the lot lines are opposed to a side lot line of an adjoining lot, no fence~~ exceed~~ing~~ 30 inches in height if built of solid / view obstructing materials or shall be constructed of materials such as metal / wrought iron through which approaching traffic may be viewed from the opposing street (i.e a View Fence) ~~between the front building lines and the side yard line of the abutting lot,~~ as indicated in Figure 12: Fence at Corner (Key Lot).

Figure 12: Fence at Corner (Key Lot)

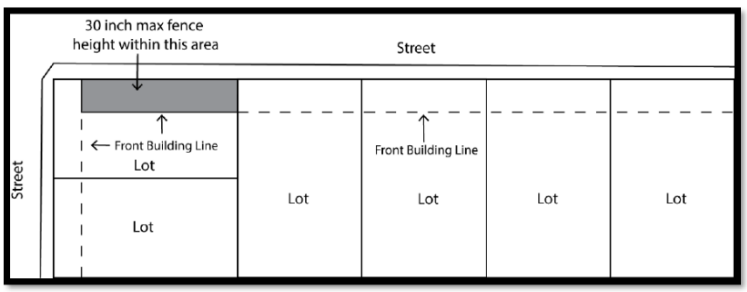

Tellus Group – High-Quality Builders











TELLUS GROUP

Tellus Group – High-Quality Builders













TELLUS GROUP

Tellus Group – High-Quality Builders













TELLUS GROUP

Tellus Group – High-Quality Builders











CARMICHAEL

THE HEIGHTS AT UPTOWN CELINA

2,806 SQ. FT | 3 BEDROOM | 2.5 BATH | 2-CAR GARAGE | GAME ROOM



ELEVATION A



ELEVATION B



ELEVATION C

FEATURES

- Large Kitchen Island
- Walk-In Pantry with Generous Storage
- 2 Story Family Room
- Covered Front Porch on Every Elevation, 261+ Sq Ft
- Rear Covered Outdoor Living
- Bed 4 & Bath 3 Option
- Bed 4, Bath 3 with Media/Study Option
- Extra Upstairs Storage
- Media/Study Option
- Bed 4 & Bath 3 with Living Option
- Fireplace Option
- Primary Bath Tub Option

C35A-EFF 12-3-2025

469.746.3244
TheHeights@OliviaClarkeHomes.com

CARMICHAEL

2,806 SQ. FT | 3 BEDROOM | 2.5 BATH | 2-CAR GARAGE | GAME ROOM

BASE FLOOR PLAN





OPTIONAL SPACES

Visit our website for additional options & interactive home planning tool.

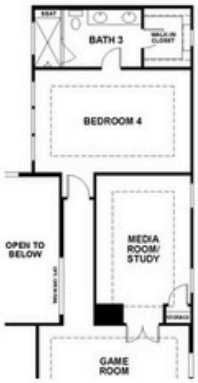

OPTIONAL BED 4 AND BATH 3 WITH MEDIA/STUDY



OPTIONAL MEDIA/STUDY



OPTIONAL BEDROOM 4 AND BATH 3

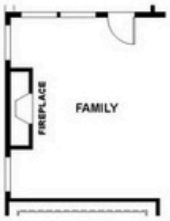

OPTIONAL FIREPLACE



OPTIONAL TUB AT PRIMARY BATH

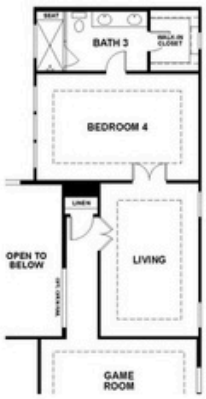

OPTIONAL BED 4 AND BATH 3 WITH LIVING

Disclaimer: Prices, plans, specifications, square footage, and availability subject to change without notice or prior obligation. Dimensions and square footage are approximate and may vary upon elevations and/or options selected. Elevation materials may vary per subdivision requirement. Please see your Sales Manager for more information.

C35A-EFF 12-3-2025

469.746.3244
TheHeights@OliviaClarkeHomes.com

EQUAL HOUSING OPPORTUNITY

LOGAN

THE HEIGHTS AT UPTOWN CELINA

3,185 SQ. FT | 4 BEDROOM | 3 BATH | 2-CAR GARAGE | GAME ROOM | STUDY



ELEVATION A



ELEVATION B



ELEVATION C

FEATURES

- Large Kitchen Island
- Walk-In Pantry
- Generous Storage and Cabinetry
- Mud Room
- Rear Covered Outdoor Living
- Open Rail Staircase
- Vaulted Ceiling in Primary Suite

Plan Date 12.19.24

469.746.3244
TheHeights@OliviaClarkeHomes.com

LOGAN

3,185 SQ. FT | 4 BEDROOM | 3 BATH | 2-CAR GARAGE | GAME ROOM | STUDY

BASE FLOOR PLAN



Disclaimer: Prices, plans, specifications, square footage, and availability subject to change without notice or prior obligation. Dimensions and square footage are approximate and may vary upon elevations and/or options selected. Elevation materials may vary per subdivision requirement. Please see your Sales Manager for more information.

EQUAL HOUSING OPPORTUNITY

469.746.3244
TheHeights@OliviaClarkeHomes.com

Item No. 6.b.

Planning & Zoning Commission Agenda
Staff Report

Meeting Date: 9/9/2026
Staff Contact: Lauren Mecke

AGENDA ITEM:
Conduct a Public Hearing/Consider/Discuss/Action on request to zone 808.1± acres on the southeast corner of County Road 285 and County Road 827 in accordance with the Oak Ridge Development Agreement (Resolution No. 2025-05-1782) (PD 26-0003)

SUMMARY:
A request to establish zoning on 808.1± acres located at the southeast corner of County Road 285 and County Road 827 in accordance with Resolution No. 2025-05-1782.

Staff recommends approval as submitted.

BACKGROUND:

Date Submitted	8/5/2026	**Jurisdiction**	City of Anna
Owner	OPP Oak Ridge LP		
Representative/Applicant	Kimley-Horn		
Requested Action	Approval of the Zoning		
Purpose	To build Single-Family Homes		
Land Area	808.1± acres		
Location	The southeast corner of County Road 285 and County Road 827		
Comp Plan Designation	Suburban Living/Community Commercial		
Existing Zoning	Agriculture (AG)		
Public Notice	8/17/2026		

Surrounding Properties

	Land Use	**Zoning**	**Comp Plan Designation**
North	Single-Family Residential/Vacant	Agriculture (AG)/N/A (ETJ)	Suburban Living/Community Commercial/Estate Residential

East	Single-Family Residential/Commercial	N/A (ETJ)	Suburban Living/Community Commercial/Estate Residential
South	Single-Family Residential/Vacant	N/A (ETJ)	Suburban Living/Community Commercial
West	Single-Family Residential/Vacant	Agriculture (AG)/N/A (ETJ)	Suburban Living/Community Commercial/Estate Residential

History

2009: City Council initiated annexation proceedings on February 24, 2009

City Council conducted Public Hearings for annexation on March 24, 2009 & April 14, 2009

City Council entered into a "Non-Annexation" Development Agreement to delay annexation of the property until development occurs (Instrument No. 20090625000793490)

2025: City Council approved the Oak Ridge Development Agreement (Res. No. 2025-05-1782) requiring annexation within 90 days and creating development standards.

City Council approved the Oak Ridge Annexation (Ord. No. 1153-2025-07)

Compatibility Considerations

Future Land Use Plan: Suburban Living and Community Commercial

Oak Ridge is in conformance with the Future Land Use Plan being a single-family subdivision with retail located at the intersection of two major roads.

Master Thoroughfare Plan: The Development complies by providing two 120' right-of-way thoroughfares.

Modifications

The only modifications to the approved development standards within the development agreement are formatting and renumbering of the exhibits by city staff.

ATTACHMENTS:

1. Locator - Oak Ridge Zoning (PD 26-0003)
2. Exhibit A (Metes & Bounds) - Oak Ridge Zoning (PD 26-0003)
3. Exhibit B (Zoning District Map) - Oak Ridge Zoning (PD 26-0003)
4. Exhibit C (Development Standards) - Oak Ridge Zoning (PD 26-0003)
5. Exhibit D (Fence) - Oak Ridge Zoning (PD 26-0003)
6. Exhibit E (Trails) - Oak Ridge Zoning (PD 26-0003)
7. Exhibit F (Tree Preservation) - Oak Ridge Zoning (PD 26-0003)

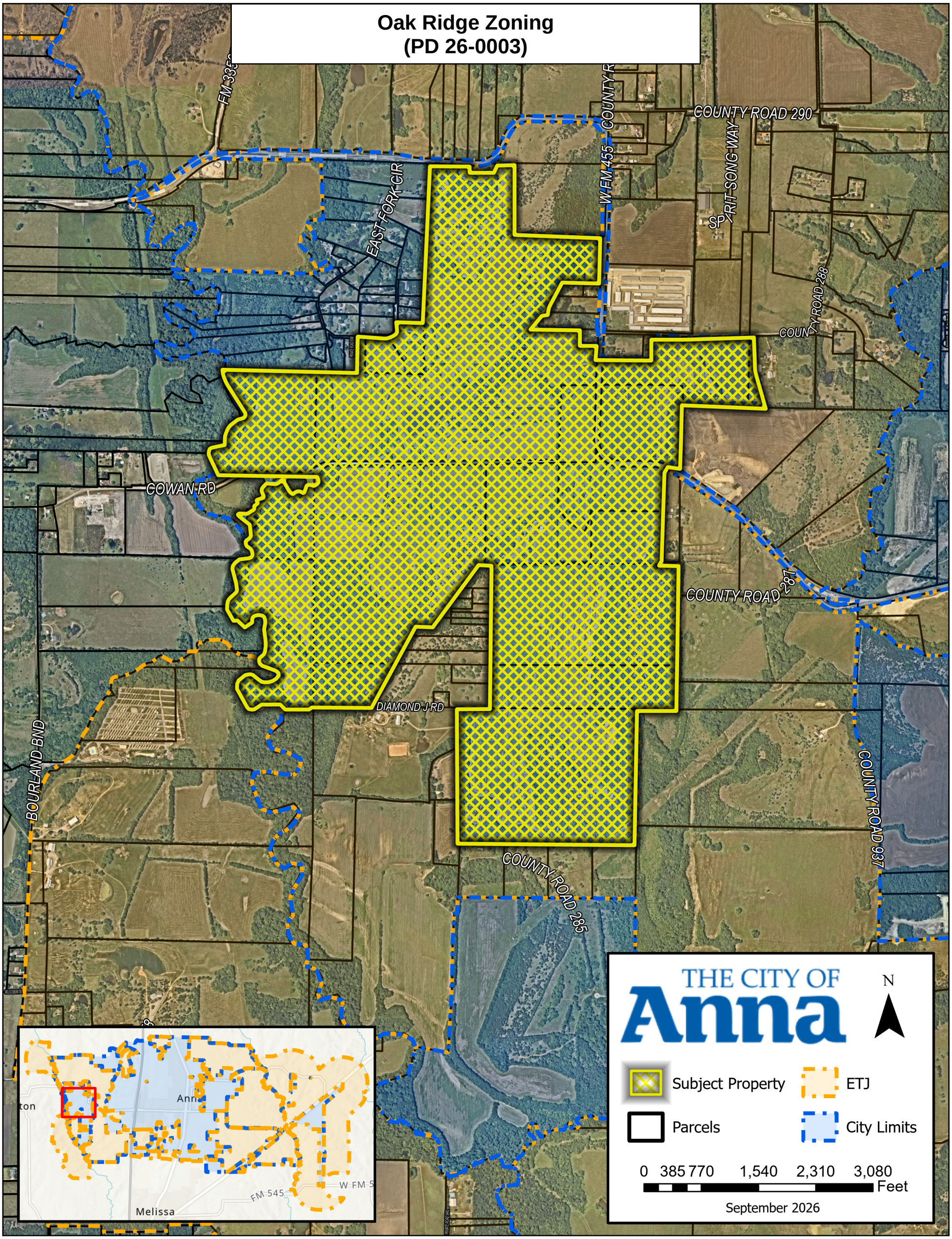
Oak Ridge Zoning
(PD 26-0003)
COUNTY ROAD 290
W FM 455
EAST FORK CIR
COUNTY ROAD 288
COWAN RD
COUNTY ROAD 287
DIAMOND J RD
BOURLAND BND
COUNTY ROAD 937
COUNTY ROAD 285
THE CITY OF
Anna
N
Subject Property
ETJ
Parcels
City Limits
0 385 770 1,540 2,310 3,080
Feet
September 2026
Melissa
FM 545

Exhibit A
Metes and Bounds Description of the Property

EXHIBIT A - LEGAL DESCRIPTION
TRACT 1

BEING a tract of land situated in the W. Garnett Survey, Abstract No. 355, the J. White Survey, Abstract No. 1015, the B. White Survey, Abstract No. 1016, R. Phalen Survey, Abstract No. 694, C. Bourland Survey, Abstract No. 39, and the J. Cahill Survey, Abstract No. 144, Collin County, Texas, and being all of a called 29.04 acre tract of land described in a deed to Daniel James Cahill and wife, Birgit Ortlepp Cahill, as recorded in Instrument No. 92-0075241 of the Official Public Records of Collin County, Texas, all of a called 14.803 acre tract of land described in a deed to Daniel James Cahill and Birgit O. Cahill, as recorded in Instrument No. 20060316000351960 of the Official Public Records of Collin County, Texas, all of a called 80.818 acre tract of land described in a deed to Annaland, Ltd., as recorded in Volume 5930, Page 1868 of the Deed Records of Collin County, Texas, all of a called 29.000 acre tract of land described in a deed to Annaland, Ltd., as recorded in Instrument No. 20060227000248840 of the Official Public Records of Collin County, Texas, remainder of a called 192.50 acre tract of land described in a deed to Annaland, Ltd., as recorded in Volume 5808, Page 1478 of the Deed Records of Collin County, Texas, all of a called 4.649 acre tract of land described in a deed to Annaland, Ltd., as recorded in Instrument No. 20090708000857040 of the Official Public Records of Collin County, Texas, and all of a called 187.62 acre tract of land described in a deed to Annaland, Ltd., as recorded in Volume 5806, Page 3203 of the Deed Records of Collin County, Texas, same being a portion of Lot 8 and all of Lots 6 and 7 of East Fork Estates, according to the plat thereof recorded in Cabinet C, Page 206 of the Plat Records of Collin County, Texas, and being more particularly described as follows:

BEGINNING at a 1/2 inch iron rod found for the northwest corner of said 80.818 acre tract, common to the northeast corner of said East Fork Estates, same being on the southerly right of way line of F.M. Highway 455, an 80 foot wide right of way;

THENCE South 88°28'18" East, along the northerly line of said 80.818 acre tract and the southerly right of way line of said F.M. Highway 455, a distance of 515.28 feet to a 1/2 inch iron rod found for a northeast corner of said 80.818 acre tract, common to the northwest corner of a called 0.830 acre tract of land described in a deed to James C. Welch, as recorded in Volume 5799, Page 2562 of the Deed Records of Collin County, Texas;

THENCE South 01°53'27" East, departing the southerly right of way line of said F.M. Highway 455, continuing along the northerly line of said 80.818 acre tract and along the westerly line of said 0.830 acre tract, a distance of 91.34 feet to a 6 inch wooden fence post found for an ell corner of said 80.818 acre tract, common to the southwest corner of said 0.830 acre tract;

THENCE South 89°59'54" East, continuing along the northerly line of said 80.818 acre tract and along the southerly line of said 0.830 acre tract, a distance of 326.61 feet to a 1/2 inch iron rod found for an ell corner of said 80.818 acre tract, common to the southeast corner of said 0.830 acre tract;

THENCE North 15°04'51" East, continuing along the northerly line of said 80.818 acre tract and along the easterly line of said 0.830 acre tract, a distance of 130.66 feet to a 1/2 inch iron rod with plastic cap stamped “Metroplex 3689” found for a northwest corner of said 80.818 acre

tract, common to the northeast corner of said 0.830 acre tract, same being on the southerly line of a called 47-1/3 acre tract of land described as “The Kelly Place” in a deed to MJLA Adams, Ltd., as recorded in Instrument No. 20110505000462590 of the Official Public Records of Collin County, Texas;

THENCE South 88°44'32" East, continuing along the northerly line of said 80.818 acre tract and along the southerly line of said 47-1/3 acre tract, a distance of 240.00 feet to a 6 inch wooden post found for the northeast corner of said 80.818 acre tract, common to an ell corner of said 47-1/3 acre tract;

THENCE South 00°42'04" West, along the easterly line of said 80.818 acre tract and the westerly line of said 47-1/3 acre tract, a distance of 941.62 feet to a 6 inch wood fence post found for an ell corner of said 80.818 acre tract, common to the southernmost southwest corner of said 47-1/3 acre tract;

THENCE South 88°25'45" East, along the northerly line of said 80.818 acre tract and the southerly line of said 47-1/3 acre tract, a distance of 1,184.32 feet to a 5/8 inch iron rod with plastic cap stamped “KHA” set for the easternmost northeast corner of said 80.818 acre tract, common to the southeast corner of said 47-1/3 acre tract, same being on the westerly right of way line of aforesaid F.M. Highway 455, from which, a 1/2 inch iron rod found for witness bears South 84°10’ East, 1.04 feet;

THENCE South 02°09'19" West, along the easterly line of said 80.818 acre tract and the westerly right of way line of said F.M. Highway 455, a distance of 604.27 feet to a 5/8 inch iron rod with plastic cap stamped “KHA” set for the northernmost southeast corner of said 80.818 acre tract, common to the northeast the J.P. Harris Addition, according to the plat thereof recorded in Cabinet G, Page 65 of the Plat Records of Collin County, Texas;

THENCE North 87°49'20" West, departing the westerly right of way line of said F.M. Highway 455, along the southerly line of said 80.818 acre tract and the northerly line of said J.P. Harris Addition, a distance of 599.72 feet to an ell corner of said 80.818 acre tract, common to the northwest corner of said J.P. Harris Addition, same being in the meanders of a small branch;

THENCE along the easterly line of said 80.818 acre tract, the westerly line of said J.P. Harris Addition, and the meanders of said small branch, the following courses and distances:

South 68°00'20" East, a distance of 61.00 feet to a point for corner;

South 15°14'40" West, a distance of 177.00 feet to a point for corner;

South 30°40'40" West, a distance of 199.90 feet to a point for corner;

South 02°24'22" West, a distance of 92.08 feet to a point for corner;

North 88°07'20" West, a distance of 78.00 feet to a point for corner;

South 57°23'40" West, a distance of 79.00 feet to a point for corner;

South 28°45'19" West, a distance of 190.85 feet to the southernmost southeast corner of said 80.818 acre tract, common to the southwest corner of said J.P. Harris Addition, same being on the northerly line of aforesaid 187.62 acre tract;

THENCE South 88°27'14" East, along the northerly line of said 187.62 acre tract and the southerly line of said J.P. Harris Addition, a distance of 2.49 feet to a point for corner;

THENCE South 89°17'06" East, continuing along the northerly line of said 187.62 acre tract and the southerly line of said J.P. Harris Addition, a distance of 667.60 feet to a 1/2 inch iron rod found for the northernmost northeast corner of said 187.62 acre tract, common to the northwest corner of a called 0.99 acre tract of land described in a deed to Brandon J. Perry and Marybeth Esther Jirasek, as recorded in Instrument No. 20191022001325990 of the Official Public Records of Collin County, Texas;

THENCE South 02°25'50" West, departing the southerly line of said J.P. Harris Addition, along the easterly line of said 187.62 acre tract and the westerly line of said 0.99 acre tract, a distance of 187.18 feet to a 5/8 inch iron rod with plastic cap stamped “KHA” set for an ell corner of said 187.62 acre tract, common to the southwest corner of said 0.99 acre tract;

THENCE South 88°15'11" East, along the northerly line of said 187.62 acre tract and the southerly line of said 0.99 acre tract, a distance of 232.84 feet to a 5/8 inch iron rod with plastic cap stamped “KHA” set for the southernmost northeast corner of said 187.62 acre tract, common to the southeast corner of said 0.99 acre tract, same being on the westerly right of way line of said F.M. Highway 455;

THENCE along the easterly line of said 187.62 acre tract and the westerly right of way line of said F.M. Highway 455, the following courses and distances:

South 02°13'19" West, a distance of 267.22 feet to a 5/8 inch iron rod with plastic cap stamped “KHA” found for corner;

South 02°17'19" West, a distance of 524.10 feet to a 5/8 inch iron rod with plastic cap stamped “KHA” found for corner;

South 02°48'19" West, a distance of 483.52 feet to a 5/8 inch iron rod with plastic cap stamped “KHA” found at the beginning of a tangent curve to the left with a radius of 358.31 feet, a central angle of 02°31'24", and a chord bearing and distance of South 01°32'37" West, 15.78 feet;

In a southerly direction, with said tangent curve to the left, an arc distance of 15.78 feet to a 5/8 inch iron rod with plastic cap stamped “KHA” set for corner;

THENCE South 01°32'37" West, departing the westerly right of way line of said F.M. Highway 455 and continuing along the easterly line of said 187.62 acre tract, a distance of 329.61 feet to a 3/8 inch iron rod found for the southeast corner of said 187.62 acre tract, same being on the northerly line of aforesaid 29.000 acre tract;

THENCE North 89°14'27" East, along the northerly line of said 29.000 acre tract, a distance of 34.72 feet to a 1/2 inch iron rod with plastic cap stamped “RPLS 5392” found for corner;

THENCE North 52°56'53" East, continuing along the northerly line of said 29.000 acre tract, a distance of 109.43 feet to the northernmost corner of said 29.000 acre tract, same being on the southerly right of way line of said F.M. Highway 455, and at the beginning of a non-tangent curve to the left with a radius of 358.31 feet, a central angle of 42°31'44", and a chord bearing and distance of South 68°05'49" East, 259.90 feet, from which, a 3/8 inch iron rod found for witness bears South 52°56’ West, 0.29 feet;

THENCE in a southeasterly direction continuing along the northerly line of said 29.000 acre tract and along the southerly right of way line of said F.M. Highway 455, with said non-tangent curve to the left, an arc distance of 265.96 feet to a 5/8 inch iron rod with plastic cap stamped “KHA” set for corner;

THENCE South 89°21'41" East, continuing along the northerly line of said 29.000 acre tract and the southerly right of way line of said F.M. Highway 455, a distance of 374.40 feet to a 1/2 inch iron rod found at the beginning of a tangent curve to the right with a radius of 723.94 feet, a central angle of 18°39'00", and a chord bearing and distance of South 80°02'10" East, 234.61 feet;

THENCE in a southeasterly direction continuing along the northerly line of said 29.000 acre tract and the southerly right of way line of said F.M. Highway 455, with said tangent curve to the right, an arc distance of 235.65 feet to a 1/2 inch iron rod found for the northeast corner of said 29.000 acre tract, same being on the westerly right of way line of County Road No. 828, a variable width right of way, no record found;

THENCE South 01°48'08" West, departing the southerly right of way line of said F.M. Highway 455, along the easterly line of said 29.000 acre tract and the westerly right of way line of said County Road No. 828, a distance of 563.66 feet to a 5/8 inch iron rod with plastic cap stamped “KHA” set for corner;

THENCE South 00°54'07" West, continuing along the easterly line of said 29.000 acre tract and the westerly right of way line of said County Road No. 828, a distance of 653.00 feet to a 1/2 inch iron rod found for the northernmost southeast corner of said 29.000 acre tract;

THENCE South 49°46'47" West, along the southeasterly line of said 29.000 acre tract and continuing along the westerly right of way line of said County Road No. 828, a distance of 54.00 feet to a 1/2 inch iron rod found for the southernmost southeast corner of said 29.000 acre tract, same being on the northerly right of way line of County Road No. 827, a variable width right of way, no record found;

THENCE South 89°34'47" West, along the southerly line of said 29.000 acre tract and the northerly right of way line of said County Road No. 827, a distance of 238.00 feet to a 1/2 inch iron rod found for corner;

THENCE North 89°31'13" West, continuing along the southerly line of said 29.000 acre tract and the northerly right of way line of said County Road No. 827, a distance of 325.00 feet to a 5/8 inch iron rod with plastic cap stamped “KHA” set for corner;

THENCE North 89°50'50" West, continuing along the southerly line of said 29.000 acre tract and the northerly right of way line of said County Road No. 827, a distance of 333.17 feet to a 1/2 inch iron rod with plastic cap stamped “RPLS 5392” found for corner;

THENCE South 89°40'57" West, continuing along the southerly line of said 29.000 acre tract and the northerly right of way line of said County Road No. 827, along the southerly line of aforesaid 14.803 acre tract, a distance of 517.20 feet to a 5/8 inch iron rod with plastic cap stamped “KHA” set for the southwest corner of said 14.803 acre tract, being on the easterly line of aforesaid 29.04 acre tract;

THENCE South 01°06'30" West, departing the northerly right of way line of said County Road No. 827, along the easterly line of said 29.04 acre tract and crossing said County Road No. 827, a distance of 17.62 feet to a 5/8 inch iron rod with plastic cap stamped “KHA” set for the southeast corner of said 29.04 acre tract, being in the centerline of said County Road No. 827 and the northerly line of aforesaid 214.121 acre tract;

THENCE North 89°26'27" East, continuing along the northerly line of said 214.121 acre tract and said County Road No. 827, a distance of 1,693.18 feet to a 5/8 inch iron rod with plastic cap stamped “KHA” found for the northeast corner of said 214.121 acre tract;

THENCE South 01°21'12" West, along the easterly line of said 214.121 acre tract and continuing along said County Road No. 827, a distance of 1,981.23 feet to a 1/2 inch iron rod found for the northernmost southeast corner of said 214.121 acre tract;

THENCE South 89°50'46" West, along the southerly line of said 214.121 acre tract and continuing along said County Road No. 827, a distance of 509.07 feet to a 1/2 inch iron rod found for an ell corner of said 214.121 acre tract;

THENCE South 01°12'43" West, along the easterly line of said 214.121 acre tract and continuing along said County Road No. 827, a distance of 1,820.15 feet to a 1/2 inch iron rod found for the southernmost southeast corner of said 214.121 acre tract;

THENCE North 89°04'29" West, departing said County Road No. 827 and along the southerly line of said 214.121 acre tract , a distance of 2,380.17 feet to a 1/2 inch iron rod found for the southwest corner of said 214.121 acre tract, common to the northwest corner of a called 10.001 acre tract of land described as Tract One in a deed to Joan Ardon Williamson, as recorded in Volume 900, Page 53 of the Deed Records of Collin County, Texas, same being on the easterly line of a called 6.716 acre tract of land described in a deed to Scott Bourland and wife, Kim Bourland, as recorded in Instrument No. 20120622000745540 of the Official Public Records of Collin County, Texas;

THENCE North 00°46'18" West, along the westerly line of said 214.121 acre tract and the easterly line of said 6.716 acre tract, passing at a distance of 579.75 feet a 1/2 inch iron rod

found for the northeast corner of said 6.716 acre tract, common to the southeast corner of a called 5.568 acre tract of land described in a deed to Scott Bourland and Kim Bourland, as recorded in Volume 5909, Page 1057 of the Deed Records of Collin County, Texas, and continuing along the same course and along the easterly line of said 6.716 acre tract, the easterly line of said 50.92 acre tract of land described in a deed to Bryan Lee Brown and Tori Renee Brown, as recorded in Instrument No. 20181115001413260 of the Official Public Records of Collin County, Texas, and County Road No. 285, a variable width right of way, no record found, for a total distance of 1,820.01 feet to a 1/2 inch iron rod found for the southernmost northwest corner of said 214.121 acre tract, common to the northeast corner of said 50.92 acre tract, same being on the southerly line of a called 24.293 acre tract of land described in a deed to Wayne A. Jones and wife, Karen L. Jones, as recorded in Instrument No. 96-0028585 of the Land Records of Collin County, Texas;

THENCE South 89°53'55" East, along the northerly line of said 214.121 acre tract, the southerly line of said 24.293 acre tract and continuing along said County Road No. 285, a distance of 444.85 feet to a rail road spike found for an ell corner of said 214.121 acre tract, common to the southeast corner of said 24.293 acre tract, from which, a 1/2 inch iron rod found for witness bears South 03°54’ West, 9.27 feet;

THENCE North 00°22'22" East, along the westerly line of said 214.121 acre tract, the easterly line of said 24.293 acre tract, the easterly line of a called 3.00 acre tract of land described in a deed to Teresa I. Davis, as recorded in Instrument No. 20110308000252990 of the Official Public Records of Collin County, Texas, the easterly line of a called 5.000 acre tract of land described in a deed to Margarita Rose Whitworth, as recorded in Instrument No. 94-0104190 of the Land Records of Collin County, Texas, the easterly line of a called 4.000 acre tract of land described in a deed to Fernando Encizo and wife, Joyce Encizo, as recorded in Volume 2854, Page 469 of the Deed Records of Collin County, Texas, the easterly line of a called 1.000 acre tract of land described in a deed to Tom Milligan and wife, Elizabeth J. Milligan, as recorded in Volume 1175, Page 481 of the Deed Records of Collin County, Texas, the easterly line of a called 1 acre tract of land described in a deed to Thomas Calvin Red and wife, Mary Frances Red, as recorded in Volume 1127, Page 251 of the Deed Records of Collin County, Texas, and continuing along said County Road No. 285, a distance of 1,273.04 feet to the northeast corner of said 1 acre tract, common to the southeast corner of a called 0.998 acre tract of land described in a deed to Thomas Calvin Red and wife, Mary Frances Red, as recorded in Volume 2381, Page 892 of the Deed Records of Collin County, Texas, from which, a 1/2 inch iron rod found for witness bears North 57°29’ East, 0.25 feet;

THENCE North 01°42'37" East, along the easterly line of said 0.998 acre tract, the easterly line of a called 5.000 acre tract of land described in a deed to Calvin J. Red and Frances Red, as recorded in Volume 854, Page 296 of the Deed Records of Collin County, Texas, and continuing along the westerly line of said 214.121 acre tract and said County Road No. 285, a distance of 318.87 feet to a 1/2 inch iron rod bent found for the northeast corner of said 5.000 acre tract, common to the southeast corner of a called 2.23 acre tract of land described in a deed to Debra Ann Lacy, as recorded in Instrument No. 96-0064507 of the Land Records of Collin County, Texas;

THENCE North 00°26'40" East, along the easterly line of said 2.23 acre tract, continuing along the westerly line of said 214.121 acre tract and said County Road No. 285, a distance of 340.76 feet to a 5/8 inch iron rod with illegible plastic cap found for the northwest corner of said 214.121 acre tract, common to the northeast corner of said 2.23 acre tract, and the intersection of said County Road No. 285 with County Road No. 827, a variable width right of way, no record found, same being on the southerly line of aforesaid 29.04 acre tract;

THENCE North 89°44'45" West, departing said County Road No. 285, continuing along the southerly line of said 29.04 acre tract and along the northerly line of said 2.23 acre tract, a distance of 96.65 feet to a 1/2 inch iron rod with plastic cap stamped “Metroplex RPLS 3689” found for the southwest corner of said 29.04 acre tract, being on the easterly line of aforesaid 192.50 acre tract;

THENCE South 00°40'25" West, along the easterly line of said 192.50 acre tract, a distance of 4.86 feet to a 1/2 inch iron rod with plastic cap stamped “Metroplex RPLS 3689” found for the northernmost southeast corner of said 192.50 acre tract;

THENCE North 86°25'28" West, departing said County Road No. 285, along the southerly line of said 192.50 acre tract, a distance of 83.80 feet to a concrete monument found for an ell corner of said 192.50 acre tract;

THENCE along the southeasterly line of said 192.50 acre tract, the following courses and distances:

South 34°33'32" West, a distance of 704.40 feet to a 5/8 inch iron rod with plastic cap stamped “KHA” set for corner;

South 35°21'41" West, a distance of 350.93 feet to a concrete monument found for corner;

North 78°48'13" West, a distance of 227.92 feet to a 1/2 inch iron rod with plastic cap stamped “Metroplex RPLS 3689” found for corner;

South 28°29'01" West, a distance of 1,262.87 feet to a 5/8 inch iron rod found for the southernmost southeast corner of said 192.50 acre tract, same being on the northerly line of a called 50.92 acre tract of land described in a deed to Bryan Lee Brown and Tori Renee Brown, as recorded in Instrument No. 20181115001413260 of the Official Public Records of Collin County, Texas;

THENCE North 88°57'31" West, along the southerly line of said 192.50 acre tract and the northerly line of said 50.92 acre tract, a distance of 821.17 feet to a 5/8 inch iron rod with plastic cap stamped “KHA” set for an ell corner of said 192.50 acre tract;

THENCE South 00°27'46" West, continuing along the southerly line of said 192.50 acre tract, a distance of 37.76 feet to a 1/2 inch iron rod with plastic cap stamped “Metroplex RPLS 3689” found for a southeast corner of said 192.50 acre tract;

THENCE North 88°52'39" West, continuing along the southerly line of said 192.50 acre tract, a distance of 360.18 feet to the southwest corner of said 192.50 acre tract, same being in the meanders of the East Fork of the Trinity River;

THENCE along the westerly line of said 192.50 acre tract and the meanders of the East Fork of the Trinity River, the following courses and distances:

North 18°33'49" West, a distance of 37.40 feet to a point for corner;

North 51°56'45" West, a distance of 46.74 feet to a point for corner;

South 88°12'32" West, a distance of 255.64 feet to a point for corner;

South 53°43'07" West, a distance of 118.33 feet to a point for corner;

North 86°29'16" West, a distance of 52.73 feet to a point for corner;

North 56°48'47" West, a distance of 41.44 feet to a point for corner;

North 30°57'19" West, a distance of 209.46 feet to a point for corner;

North 18°36'40" West, a distance of 87.13 feet to a point for corner;

North 05°16'02" West, a distance of 50.25 feet to a point for corner;

North 17°21'18" East, a distance of 53.30 feet to a point for corner;

North 49°29'38" East, a distance of 151.36 feet to a point for corner;

South 88°17'55" East, a distance of 56.37 feet to a point for corner;

South 53°40'30" East, a distance of 158.58 feet to a point for corner;

South 78°11'32" East, a distance of 93.43 feet to a point for corner;

North 78°30'47" East, a distance of 69.23 feet to a point for corner;

North 51°35'54" East, a distance of 62.45 feet to a point for corner;

North 22°36'23" East, a distance of 52.33 feet to a point for corner;

North 23°13'30" West, a distance of 51.72 feet to a point for corner;

North 67°56'56" West, a distance of 222.92 feet to a point for corner;

North 37°28'49" West, a distance of 54.90 feet to a point for corner;

North 15°36'39" East, a distance of 64.24 feet to a point for corner;

North 72°16'55" East, a distance of 46.16 feet to a point for corner;

North 24°48'35" East, a distance of 79.66 feet to a point for corner;

North 00°40'44" West, a distance of 173.91 feet to a point for corner;

North 09°05'03" West, a distance of 117.20 feet to a point for corner;

North 05°16'09" East, a distance of 114.95 feet to a point for corner;

North 62°57'13" East, a distance of 13.32 feet to a point for corner;

North 03°58'52" West, a distance of 27.84 feet to a point for corner;

North 61°00'18" West, a distance of 71.20 feet to a point for corner;

South 77°47'51" West, a distance of 49.68 feet to a point for corner;

South 38°23'00" West, a distance of 81.14 feet to a point for corner;

South 58°42'44" West, a distance of 135.79 feet to a point for corner;

South 85°52'59" West, a distance of 33.73 feet to a point for corner;

North 37°49'28" West, a distance of 106.02 feet to a point for corner;

South 87°20'09" West, a distance of 53.35 feet to a point for corner;

North 41°01'42" West, a distance of 29.14 feet to a point for corner;

North 15°24'28" West, a distance of 188.88 feet to a point for corner;

North 12°58'57" East, a distance of 87.22 feet to a point for corner;

North 41°31'15" East, a distance of 154.10 feet to a point for corner;

North 12°59'53" West, a distance of 308.06 feet to a point for corner;

North 54°50'19" West, a distance of 19.23 feet to a point for corner;

THENCE departing the meanders of the East Fork of the Trinity River, continuing along the westerly line of said 192.50 acre tract and the along the meanders of a small branch, the following courses and distances:

North 39°22'46" East, a distance of 106.17 feet to a point for corner;

North 83°13'03" East, a distance of 193.12 feet to a point for corner;

North 25°59'59" East, a distance of 35.85 feet to a point for corner;

North 07°12'47" East, a distance of 65.75 feet to a point for corner;

North 26°42'38" West, a distance of 97.02 feet to a point for corner;

North 34°38'14" East, a distance of 34.70 feet to a point for corner;

North 06°45'33" West, a distance of 13.52 feet to a point for corner;

North 45°12'46" West, a distance of 27.57 feet to a point for corner;

North 04°24'23" West, a distance of 20.14 feet to a point for corner;

North 40°46'43" East, a distance of 43.45 feet to a point for corner;

North 14°18'42" East, a distance of 19.67 feet to a point for corner;

North 26°19'30" West, a distance of 85.42 feet to a point for corner;

North 10°42'35" West, a distance of 22.00 feet to a point for corner;

North 01°40'07" East, a distance of 28.06 feet to a point for corner;

North 18°08'52" East, a distance of 15.57 feet to a point for corner;

South 88°28'31" East, a distance of 28.14 feet to a point for corner;

South 37°29'18" East, a distance of 55.50 feet to a point for corner;

North 45°12'50" East, a distance of 78.34 feet to a point for corner;

North 20°40'46" East, a distance of 39.55 feet to a point for corner;

North 28°54'33" West, a distance of 45.55 feet to a point for corner;

North 55°04'53" West, a distance of 73.65 feet to a point for corner;

North 76°29'44" West, a distance of 62.30 feet to a point for corner;

North 31°56'55" West, a distance of 42.98 feet to a point for corner;

North 34°37'17" East, a distance of 35.12 feet to a point for corner;

South 77°12'20" East, a distance of 17.47 feet to a point for corner;

South 44°23'15" East, a distance of 37.02 feet to a point for corner;

North 73°22'40" East, a distance of 20.75 feet to a point for corner;

North 25°16'08" East, a distance of 71.84 feet to a point for corner;

North 69°39'07" East, a distance of 26.32 feet to a point for corner;

North 35°04'13" East, a distance of 18.62 feet to a point for corner;

North 18°08'17" West, a distance of 59.18 feet to a point for corner;

North 26°57'25" East, a distance of 30.65 feet to a point for corner;

North 72°07'04" East, a distance of 17.13 feet to a point for corner;

South 75°41'09" East, a distance of 35.03 feet to a point for corner;

North 88°13'19" East, a distance of 27.26 feet to a point for corner;

North 18°54'16" East, a distance of 62.23 feet to a point for corner;

North 30°01'27" West, a distance of 65.30 feet to a point for corner;

North 48°15'58" East, a distance of 38.73 feet to a point for corner;

North 18°19'38" East, a distance of 40.53 feet to a point for corner;

North 52°21'48" East, a distance of 50.90 feet to a point for corner;

South 84°59'05" East, a distance of 38.08 feet to a point for corner;

South 08°31'05" East, a distance of 41.98 feet to a point for corner;

South 80°46'24" East, a distance of 19.97 feet to a point for corner;

North 63°37'22" East, a distance of 69.27 feet to a point for corner;

North 38°20'01" East, a distance of 58.38 feet to a point for corner;

North 72°42'38" East, a distance of 60.72 feet to a point for corner;

South 10°28'46" East, a distance of 20.70 feet to a point for corner;

South 48°27'16" West, a distance of 22.03 feet to a point for corner;

South 03°50'33" East, a distance of 36.62 feet to a point for corner;

South 82°03'56" East, a distance of 38.89 feet to a point for corner;

South 22°28'11" East, a distance of 52.32 feet to a point for corner;

North 82°50'30" East, a distance of 33.41 feet to a point for corner;

South 61°06'21" East, a distance of 22.80 feet to a point for corner;

South 34°05'06" East, a distance of 20.86 feet to a point for corner;

South 06°36'20" West, a distance of 36.84 feet to a point for corner;

North 89°46'28" East, a distance of 50.48 feet to a point for corner;

North 32°09'46" East, a distance of 43.30 feet to a point for corner;

North 86°33'06" East, a distance of 16.09 feet to a point for corner;

South 59°06'29" East, a distance of 43.15 feet to a point for corner;

North 34°03'05" East, a distance of 66.70 feet to a point for corner;

North 24°01'47" East, a distance of 49.56 feet to a point for corner;

North 86°09'13" East, a distance of 112.44 feet to a point for corner;

South 57°50'37" East, a distance of 33.63 feet to a point for corner;

THENCE North 01°49'43" East, departing the meanders of said small branch and continuing along the westerly line of said 192.50 acre tract, a distance of 124.35 feet to a 1/2 inch iron rod with plastic cap stamped “RPLS 4709” found for the southernmost southeast corner aforesaid 187.62 acre tract;

THENCE North 88°41'50" West, departing the westerly line of said 192.50 acre tract, along the southerly line of said 187.62 acre tract and crossing County Road No. 210, a variable width right of way, a distance of 1,345.68 feet to the southwest corner of said 187.62 acre tract, same being in the meanders of the East Fork of the Trinity River;

THENCE along the westerly line of said 187.62 acre tract and said meanders of the East Fork of the Trinity River, the following courses and distances:

North 22°38'37" West, a distance of 269.84 feet to a point for corner;

North 09°53'16" East, a distance of 98.56 feet to a point for corner;

North 77°34'56" East, a distance of 196.81 feet to a point for corner;

North 02°13'00" West, a distance of 77.82 feet to a point for corner;

North 20°08'30" East, a distance of 213.55 feet to a point for corner;

North 62°52'29" East, a distance of 218.73 feet to a point for corner;

North 00°46'50" West, a distance of 61.19 feet to a point for corner;

North 34°19'31" West, a distance of 222.90 feet to a point for corner;

North 28°08'09" West, a distance of 149.58 feet to a point for corner;

North 15°53'51" West, a distance of 217.59 feet to a point for corner;

North 03°12'11" West, a distance of 52.30 feet to the westernmost northwest corner of said 187.62 acre tract, same being on the southerly line of East Fork Estates, according to the plat thereof recorded in Cabinet C, Page 206 of the Plat Records of Collin County, Texas;

THENCE South 88°56'18" East, departing said meanders, along the northerly line of said 187.62 acre tract and the southerly line of said East Fork Estates, passing at a distance of 54.66 feet a 1/2 inch iron pipe found for corner, and continuing along the same course, for a total distance of 1,775.13 feet to a 1/2 inch iron rod with plastic cap stamped “RPLS 4709” found for an ell corner of said 187.62 acre tract;

THENCE North 02°39'53" East, departing the southerly line of said East Fork Estates, along the westerly line of said 187.62 acre tract and crossing aforesaid Lot 8, passing at a distance of 449.35 feet a 1/2 inch iron rod with plastic cap stamped RPLS 5686” found on the southerly line of a 60 foot wide Road and Utility Easement recorded in Cabinet C, Page 206 of the Plat Records of Collin County, Texas, and continuing along the same course, for a total distance of 479.35 feet to a northwest corner of said 187.62 acre tract, same being on the northerly line of said Lot 8, the southerly line of Lot 22 of said East Fork Estates;

THENCE South 88°09'27" East, along the northerly line of said 187.62 acre tract, the northerly line of said Lot 8, the northerly line of aforesaid Lot 7, the southerly line of said Lot 22 and the southerly line of Lot 21 of said East Fork Estates, a distance of 396.22 feet to the northeast corner of said Lot 7, common to the northwest corner of aforesaid Lot 6, from which, a mag nail with shiner found for witness bears South 80°48’ West, 0.29 feet;

THENCE North 67°37'28" East, along the northwesterly line of said 187.62 acre tract, the northwesterly line of said Lot 6, and the southeasterly line of said Lot 21, a distance of 72.10 feet to a point for corner, from which, a 1/2 inch iron rod found for witness bears North 79°18’ East, 0.56 feet;

THENCE North 33°03'40" East, continuing along the northwesterly line of said 187.62 acre tract, the northwesterly line of said Lot 6, and the southeasterly line of said Lot 21, a distance of 60.00 feet to a mag nail found for corner;

THENCE North 00°27'10" East, along the westerly line of said 187.62 acre tract, the westerly line of said Lot 6 and the easterly line of said Lot 21, a distance of 136.90 feet to a northwest corner of said 187.62 acre tract, the northwest corner of said Lot 6, common to the southwest corner of Lot 5 of said East Fork Estates, from which, a 1/2 inch iron rod found for witness bears North 81°20’ East, 0.57 feet;

THENCE South 88°22'07" East, along the northerly line of said 187.62 acre tract, the northerly line of said Lot 6, and the southerly line of said 5, passing at a distance of 30.00 feet a 1/2 inch iron rod found for corner on the easterly line of said 60 foot wide Road and Utility Easement, and continuing along the same course, for a total distance of 381.99 feet to a 5/8 inch iron rod with plastic cap stamped “KHA” set for the northeast corner of said Lot 6, common to the southeast corner of said Lot 5, and an ell corner of said 187.62 acre tract, from which, a 1/2 inch iron rod found for witness bears North 83°22’ West, 0.94 feet and a 1/2 inch iron rod found for witness bears South 89°18’ West, 1.80 feet;

THENCE North 02°17'35" East, along the westerly line of said 187.62 acre tract and along the easterly line of said East Fork Estates, a distance of 344.92 feet to a 1/2 inch iron rod with plastic cap stamped “Metroplex RPLS 3689” found for corner;

THENCE North 03°13'26" East, continuing along the westerly line of said 187.62 acre tract and along the easterly line of said East Fork Estates, a distance of 312.50 feet to a 1/2 inch iron rod with plastic cap stamped “Metroplex RPLS 3689” found for corner;

THENCE North 02°50'31" East, continuing along the westerly line of said 187.62 acre tract and along the easterly line of said East Fork Estates, a distance of 451.70 feet to a 1/2 inch iron rod found for corner;

THENCE North 03°08'55" East, continuing along the westerly line of said 187.62 acre tract and along the easterly line of said East Fork Estates, a distance of 278.52 feet to a 1/2 inch iron rod with plastic cap stamped “Metroplex RPLS 3689” found for corner;

THENCE North 02°24'40" East, continuing along the westerly line of said 187.62 acre tract and along the easterly line of said East Fork Estates, a distance of 729.57 feet to the **POINT OF BEGINNING** and containing 748.676 acres (32,612,334 square feet) of land, more or less.

TRACT 2

BEING a tract of land situated in the R. Phalen Survey, Abstract No. 694 and the J.M. Kincade Survey, Abstract No. 510, Collin County, Texas, and being all of a called 59.536 acre tract of land described in a deed to Annaland, Ltd., as recorded in Volume 5930, Page 1861 of the Deed Records of Collin County, Texas, and being more particularly described as follows:

BEGINNING at the westernmost northwest corner of said 59.536 acre tract, common to the southwest corner of a called 3.988 acre tract of land described in a deed to MMD Wallace, LLC, as recorded in Instrument No. 20220325000481190 of the Official Public Records of Collin County, Texas, being on the easterly right of way line of F.M. Highway 455, an 80 foot wide right of way, from which, a 1/2 inch iron rod found for witness bears North 89°08’ West, 0.30 feet;

THENCE South 88°34'25" East, departing the easterly right of way line of said F.M. Highway 455, along the northerly line of said 59.536 acre tract, the southerly line of said 3.988 acre tract, and the southerly line of a called 1.00 acre tract of land described in a deed to Mary C. Rollins,

as recorded in Instrument No. 20090519000609560 of the Official Public Records of Collin County, Texas, a distance of 664.53 feet to a 6 inch wooden post found for an ell corner of said 59.536 acre tract, common to the southeast corner of a called 1.00 acre tract of land described in a deed to Mary C. Rollins, as recorded in Instrument No. 20090519000609560 of the Official Public Records of Collin County, Texas;

THENCE North 02°32'31" East, along the westerly line of said 59.536 acre tract and the easterly line of said 1.00 acre tract, a distance of 308.62 feet to a 1/2 inch iron rod with plastic cap stamped “Metroplex 3689” found for the northernmost northwest corner of said 59.536 acre tract, common to the northeast corner of said 1.00 acre tract, being on the southerly right of way line of County Road No. 288, a variable width right of way, no record found;

THENCE South 88°45'13" East, along the northerly line of said 59.536 acre tract and the southerly right of way line of said County Road No. 288, a distance of 511.72 feet to a point for corner, from which, a 1/2 inch bent iron rod found for witness bears South 01°52” East, 0.64 feet;

THENCE North 85°54'47" East, continuing along the northerly line of said 59.536 acre tract and the southerly right of way line of said County Road No. 288, a distance of 200.00 feet to a 1/2 inch iron rod found for corner;

THENCE North 89°21'31" East, continuing along the northerly line of said 59.536 acre tract and the southerly right of way line of said County Road No. 288, a distance of 660.45 feet to a 1/2 inch iron rod found for the northeast corner of said 59.536 acre tract, common to the northwest corner of a called 17.229 acre tract of land described in a deed to Gero Atilla Temesvary and Kristin Rae Temesvary, as recorded in Instrument No. 20200123000098610 of the Official Public Records of Collin County, Texas;

THENCE South 00°46'45" East, departing the southerly right of way line of said County Road No. 288, along the easterly line of said 59.536 acre tract and the westerly line of said 17.229 acre tract, a distance of 463.90 feet to a 1/2 inch iron rod found for corner;

THENCE South 15°57'46" East, continuing along the easterly line of said 59.536 acre tract and the westerly line of said 17.229 acre tract, a distance of 526.58 feet to a 5/8 inch iron rod with plastic cap stamped “KHA” set for the northernmost southeast corner of said 59.536 acre tract;

THENCE along the southerly line of said 59.536 acre tract, the following courses and distances:

North 88°28'51" West, a distance of 321.99 feet to a 1/2 inch iron rod found for corner;

North 89°27'46" West, a distance of 189.98 feet to a 1/2 inch iron rod with plastic cap stamped “Metroplex 3689” found for corner;

North 88°09'30" West, a distance of 279.41 feet to a 1/2 inch iron rod found for corner;

North 83°59'34" West, a distance of 198.41 feet to a 1/2 inch iron rod found for corner;

North 89°37'20" West, a distance of 130.06 feet to a 5/8 inch iron rod with plastic cap stamped “KHA” set for an ell corner of said 59.536 acre tract;

THENCE South 01°15'52" West, along the easterly line of said 59.536 acre tract, a distance of 833.23 feet to a 5/8 inch iron rod with plastic cap stamped “KHA” set for the southernmost southeast corner of said 59.536 acre tract;

THENCE North 88°32'11" West, along the southerly line of said 59.536 acre tract, a distance of 131.97 feet to a point for corner on the northerly right of way line of aforesaid F.M. Highway 455, and at the beginning of a non-tangent curve to the left with a radius of 803.94 feet, a central angle of 24°19'02", and a chord bearing and distance of North 77°12'09" West, 338.65 feet, from which, a 1/2 inch iron rod with plastic cap stamped “Metroplex 3689” found for witness bears North 87°29’ East, 0.75 feet;

THENCE in a northwesterly direction along the southerly line of said 59.536 acre tract and the northerly right of way line of said F.M. Highway 455, with said non-tangent curve to the left, an arc distance of 341.21 feet to a 1/2 inch iron rod found for corner;

THENCE North 89°21'41" West, continuing along the southerly line of said 59.536 acre tract and the northerly right of way line of said F.M. Highway 455, a distance of 374.40 feet to a 5/8 inch iron rod with plastic cap stamped “KHA” set at the beginning of a tangent curve to the right with a radius of 278.31 feet, a central angle of 92°10'00", and a chord bearing and distance of North 43°16'41" West, 400.96 feet;

THENCE in a northwesterly direction along the curving southwesterly line of said 59.536 acre tract and the curving northeasterly right of way line of said F.M. Highway 455, with said tangent curve to the right, an arc distance of 447.69 feet to a point for corner, from which, a 1/2 inch iron rod found for witness bears South 24°42’ East, 0.39 feet;

THENCE North 02°48'19" East, along the westerly line of said 59.536 acre tract and the easterly right of way line of said F.M. Highway 455, a distance of 483.88 feet to a point for corner, from which, a 1/2 inch iron rod laid over found for witness bears South 65°15’ West, 0.24 feet;

THENCE North 02°17'19" East, continuing along the westerly line of said 59.536 acre tract and the easterly right of way line of said F.M. Highway 455, a distance of 524.50 feet to a 1/2 inch iron rod found for corner;

THENCE North 02°13'19" East, continuing along the westerly line of said 59.536 acre tract and the easterly right of way line of said F.M. Highway 455, a distance of 78.15 feet to the **POINT OF BEGINNING** and containing 59.545 acres (2,593,774 square feet) of land, more or less.

tri pointe HOMES

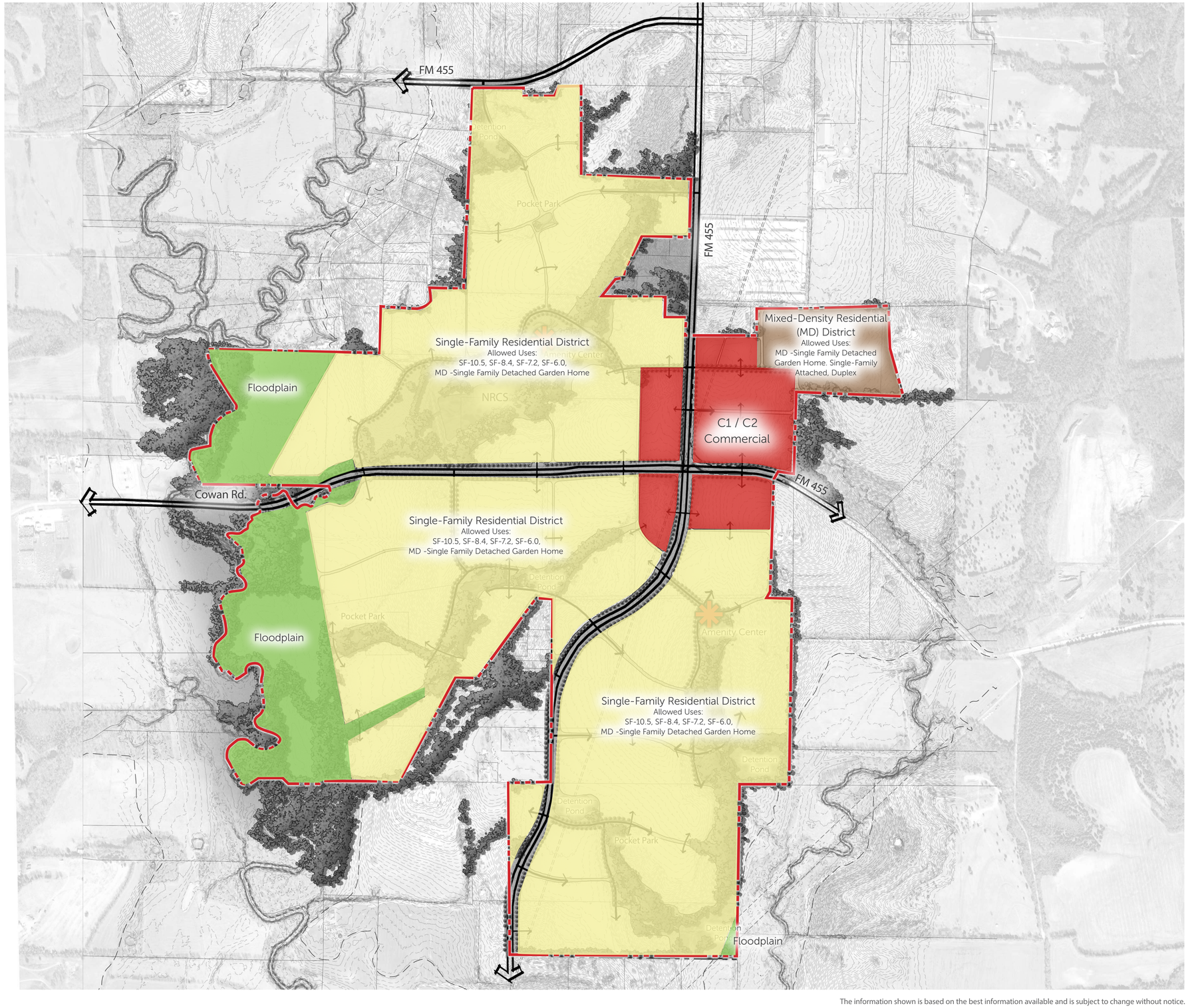

Legend

- Site Boundary
- C1 / C2 Commercial
- Mixed-Desnity Residential (MD) District
- Single-Family Residential District
- Floodplain

The information shown is based on the best information available and is subject to change without notice.

0 250' 500' 1000'

OAK RIDGE | EXHIBIT B - ZONING DISTRICT MAP (04/2025)

TRACING PAPER
PLANNING + DESIGN

EXHIBIT C (OAK RIDGE ZONING – PD 26-0003)

DEVELOPMENT REGULATIONS FOR OAK RIDGE

The permitted uses and standards for development of the Property shall be in accordance with the Single-Family Residential District (SF-10.5), Single-Family Residential District (SF-7.2), Single-Family Residential District (SF-6.0), Mixed-Density Residential District (MD - Single-Family Garden Home, Single-Family Attached, Single-Family Duplex), Local Commercial District (C-1), and Regional Commercial District (C-2) of the Zoning Ordinance and applicable City Regulations, except as amended and modified in these Development Regulations and this Agreement including without limitation the City's Planning and Development Regulations.

Disclaimer: Zoning Ordinance modifications set forth herein are specifically related to the Property associated with this property and shall not apply to any additional areas within or outside of the city limits.

Illustrative Layout; Conflicts and Terms.

1. Development shall generally comply with Exhibit B – "Zoning District Map". Where there is a conflict between the Illustrative Layout and these Development Regulations, these Development Regulations shall control.

2. These Development Regulations and the City's Ordinances in effect at the time these Development Regulations were prepared shall control development of the project. Where there is a conflict between these Development Regulations and the City's Zoning Ordinance, these Development Regulations shall control. Upon approval of a Planned Development District in accordance with these Development Regulations, the Planned Development shall control.

3. Terms that are not defined in these Development Regulations shall have the meanings ascribed to such terms in the City's Zoning Ordinance or the Development Agreement, as applicable. When there is a conflict between the City's Zoning Ordinance and the Development Agreement, the Development Agreement shall control.

4. Allowable land uses are identified on Exhibit B.

5. Maximum number of residential units (combined total of SF-10.5, SF-8.4, SF-7.2, SF-6.0, and MD): 3,000 units.

    A. Maximum number of Single-Family and MD units 100%

i. Maximum number of MD units 20%
ii. Maximum number of SF-6.0 units 45%
iii. Minimum number of SF-7.2 units 15%
iv. Minimum number of SF-8.4 units 10%
v. Minimum number of SF-10.5 units 5%

Lot sizes may be mixed within each area to provide additional options and character to the project.

6. Fencing:

A. All fences backing or siding onto Cowan Road and FM 455 shall be solid masonry construction.
B. All fences backing or siding on to creek corridors (greenbelts), linear park areas, pocket parks, or open space areas shall be ornamental metal fences, such as wrought iron or tubular steel.
C. All wood privacy fencing between residences shall be at least six feet in height.
D. Wood fencing shall be stained and sealed. Plastic and chain link fencing is prohibited.
E. All fences backing or siding to common areas and the project perimeter shall be uniform wood (board on board) construction measuring at least six feet in height.
F. Allowable fencing materials are further identified on Exhibit D – "Fence Exhibit" of these Development Standards.

7. A minimum 20-foot-wide common area tract to be owned and maintained by the homeowners' association will be required along both sides of Cowan Road and FM 455 as shown on the Illustrative Layout. Within the 20-foot-wide common area tract, Developer shall be required to plant one large tree (minimum of three-inch caliper and seven feet height at the time of planting) per 50 linear feet of screening wall and one ornamental tree per 30 feet of screening wall. Trees may be grouped or clustered to facilitate site design.

8. Private Amenities:

A. The creek corridors (greenbelts), pocket parks, and linear park areas shall be provided in the general locations shown on the Illustrative Layout; provided,

however, that the final locations of the greenbelt, pocket parks and linear park areas shall be determined at the time of Concept Plan approval and may be approved in phases per platting approval. The Director of Development Services or his/her designee is authorized to administratively approve modifications to the locations of the creek corridors, pocket parks and linear park areas during the platting stage or the permitting stage. Developer may receive credit against Park Development and Park Dedication Fees for these areas as set forth in the Development Agreement.

B. The location of the trail system shall be in general conformance with Exhibit E; provided, however, that the final locations of the trail system shall be determined at the time of civil engineering plan approval and may be approved in phases per platting approval. The Director of Development Services or his/her designee is authorized to administratively approve modifications to the locations of the trail system during the platting stage or the permitting stage.

C. Two private amenity center facilities shall be provided as part of the single-family development in the general locations shown on the Illustrative Layout.

9. Public Parks and Amenities:

A. The creek corridors (greenbelts), linear park areas and trail system shown on the Illustrative Layout shall be accessible and open to the general public. The Developer will receive credit against Park Development and Park Dedication Fees for these areas as set forth in the Development Agreement.

10. Infrastructure Improvements: As shown on the Illustrative Layout, Cowan Road shall be dedicated with a 120’ R.O.W. as a 6-lane divided principal arterial; FM 455 shall be dedicated with a 120’ R.O.W. as a 6-lane divided principal arterial; Trinity Falls Parkway south of Cowan Road shall be dedicated with a 120’ R.O.W. as a 6-lane divided principal arterial. Where adjacent to property owned by others, Oak Ridge will dedicate 60’ of the total 120’. When development occurs adjacent to Trinity Falls Parkway and Cowan Road, 4 lanes of the ultimate 6 lane arterial will be constructed. The city shall construct the final two lanes when traffic warrants. FM 455 pavement expansion will be constructed by TxDOT. The realignment of FM 455 is under

consideration by TxDOT and could alter these requirements; revisions, if any, to the alignments will be addressed in the Concept Plan.

ARTICLE 9.02 SUBDIVISION REGULATIONS

1. **Sec. 9.02.086 Sidewalks**

(a) Provided in Residential and Nonresidential Areas

(1) Pedestrian concrete walkways (sidewalks) not less than the following width shall be provided along both sides of newly constructed streets as follows:

Street Type	**Sidewalk Width**
Arterial	6 feet
Divided and undivided collector	6 feet
Neighborhood collector	6 feet
Local residential	5 feet

(2) Construction standards for sidewalks shall be as set forth in the City's design standards.

(3) Concrete trail widths vary and generally follow locations shown on Exhibit E.

ARTICLE 9.03 DESIGN STANDARDS

1. **Sec. 2 Streets**

Table 2.1 GEOMETRIC DESIGN STANDARDS

Design Element	Principal Arterial Divided	Minor Arterial Divided	Minor Arterial Undivided	Major Collector Undivided	Minor Collector Undivided	Local
Number of Traffic Lanes	6	4	4	4	2	2
Maximum Lane Width (Feet)	12	12	12	11	11+	15
Minimum RW Width * (Feet)	120	90	80	80	60	50
Design Speed (MPH)	45	40	40	40	35	25
Stopping Sight distance (Feet)	400	325	325	325	325	325
Median Width ** (Feet)	16	14	14	-	-	-
Minimum Lateral Clearance (feet)	6	6	6	6	6	-
Parking Permitted	No	No	No	No	Com. Some / Res. Yes	Res. Yes
Minimum Horizontal Centerline Curvature (Feet)	1200	850	850	Com. 700 Res. 600	Com. 500 Res. 350	Res. 200 Elbow 50’

*** RIGHT-OF-WAY REQUIREMENTS FOR STATE HIGHWAY AND/OR THE PROVISION OF RIGHT TURN LANES OR OTHER INTERSECITON IMPROVEMENTS MAY EXCEED THIS MINIMUM RW STANDARDS.**

**** LARGER MEDIANS MAY BE REQUIRED TO PROVDE FOR MULTIPLE TURN LANES.**

***** LOCAL RESIDENTIAL CUL-DE-SACS SHALL HAVE A MINIMUM RW RADIUS OF FIFTY FEET (50’).**

ARTICLE 9.04 ZONING ORDINANCE

1. Sec. 9.04.013 Single-Family Residential (SF-10.5) District

Table 7: Single-Family Residential (SF-10.5) District Dimensional Standards

Single-Family Residential (SF-10.5) District Dimensional Standards		
Lot Requirements		
A	Lot Area (min.)	10,500 square feet [1]
B	Lot Width (min.)	80 feet
C	Lot Depth (min.)	120 feet [1]
D	Lot Coverage (max.)	60%[1]
Setback Requirements		
E	Front Yard (min.)	20 feet
F	Rear Yard (min.)	20 feet [2]
G	Side Yard (min.)	5 feet
H	Corner Side Yard (min.)	15 feet
Building Requirements		
I	Building Height (max.)	35 feet
Additional Applicable Requirements within the Zoning Ordinance		
Sec. 9.04.041 – Dimensional Regulations Sec. 9.04.042 – Site Design Requirements Sec. 9.04.043 – Parking Sec. 9.04.044 – Loading Sec. 0.04.045 - Landscaping		Sec. 9.04.046 – Screening and Fencing Sec. 9.04.047 – Outdoor Lighting Sec. 9.04.048 – Trash Sec. 0.04.049 – Performance Standards

[1] For lots located in cul-de-sacs or at knuckles, lot depth shall be reduced to 100 feet, and lot coverage shall be increased to 65%.

[2] Covered, non-enclosed patios may encroach up to 8’.

2. Sec. 9.04.014 Single-Family Residential (SF-8.4) District

(c) Dimensional Standards. Development in the Single-Family Residential (SF-8.4) district shall follow Table 7: Single-Family Residential (SF-8.4) District Dimensional Standards.

Table 7: Single-Family Residential (SF-8.4) District Dimensional Standards

Single-Family Residential (SF-8.4) District Dimensional Standards		
Lot Requirements		
A	Lot Area (min.)	8,400 square feet [1]
B	Lot Width (min.)	70 feet
C	Lot Depth (min.)	120 feet [1]
D	Lot Coverage (max.)	65%[1]
Setback Requirements		
E	Front Yard (min.)	20 feet
F	Rear Yard (min.)	20 feet [2]
G	Side Yard (min.)	5 feet
H	Corner Side Yard (min.)	15 feet
Building Requirements		
I	Building Height (max.)	35 feet
Additional Applicable Requirements within the Zoning Ordinance		
Sec. 9.04.041 – Dimensional Regulations Sec. 9.04.042 – Site Design Requirements Sec. 9.04.043 – Parking Sec. 9.04.044 – Loading Sec. 0.04.045 - Landscaping		Sec. 9.04.046 – Screening and Fencing Sec. 9.04.047 – Outdoor Lighting Sec. 9.04.048 – Trash Sec. 0.04.049 – Performance Standards

[1] For lots located in cul-de-sacs or at knuckles, lot depth shall be reduced to 100 feet, and lot coverage shall be increased to 70%.

[2] Covered, non-enclosed patios may encroach up to 8’.

3. Sec. 9.04.015 Single-Family Residential (SF-7.2) District

(c) Dimensional Standards. Development in the Single-Family Residential (SF-7.2) district shall follow Table 8: Single-Family Residential (SF-7.2) District Dimensional Standards.

Table 8: Single-Family Residential (SF-7.2) District Dimensional Standards

Single-Family Residential (SF-7.2) District Dimensional Standards		
Lot Requirements		
A	Lot Area (min.)	7,200 square feet [1]
B	Lot Width (min.)	60 feet
C	Lot Depth (min.)	120 feet [1]
D	Lot Coverage (max.)	60% [1]
Setback Requirements		
E	Front Yard (min.)	20 feet
F	Rear Yard (min.)	20 feet [2]
G	Side Yard (min.)	5 feet
H	Corner Side Yard (min.)	15 feet
Building Requirements		
I	Building Height (max.)	35 feet
Additional Applicable Requirements within the Zoning Ordinance		
Sec. 9.04.041 – Dimensional Regulations Sec. 9.04.042 – Site Design Requirements Sec. 9.04.043 – Parking Sec. 9.04.044 – Loading Sec. 0.04.045 - Landscaping		Sec. 9.04.046 – Screening and Fencing Sec. 9.04.047 – Outdoor Lighting Sec. 9.04.048 – Trash Sec. 0.04.049 – Performance Standards

[1] For lots located in cul-de-sacs or at knuckles, lot depth shall be reduced to 100 feet, and lot coverage shall be increased to 70%.

[2] Covered, non-enclosed patios may encroach up to 8’.

4. Sec. 9.04.016 Single-Family Residential (SF-6.0) District

(c) Dimensional Standards. Development in the Single-Family Residential (SF-6.0) district shall follow Table 9: Single-Family Residential (SF-6.0) District Dimensional Standards.

Table 9: Single-Family Residential (SF-6.0) District Dimensional Standards

Single-Family Residential (SF-6.0) District Dimensional Standards		
Lot Requirements		
A	Lot Area (min.)	6,000 square feet [1]
B	Lot Width (min.)	50 feet
C	Lot Depth (min.)	120 feet [1]
D	Lot Coverage (max.)	65% [1]
Setback Requirements		
E	Front Yard (min.)	20 feet
F	Rear Yard (min.)	20 feet [2]
G	Side Yard (min.)	5 feet
H	Corner Side Yard (min.)	15 feet
Building Requirements		
I	Building Height (max.)	35 feet
Additional Applicable Requirements within the Zoning Ordinance		
Sec. 9.04.041 – Dimensional Regulations Sec. 9.04.042 – Site Design Requirements Sec. 9.04.043 – Parking Sec. 9.04.044 – Loading Sec. 0.04.045 - Landscaping		Sec. 9.04.046 – Screening and Fencing Sec. 9.04.047 – Outdoor Lighting Sec. 9.04.048 – Trash Sec. 0.04.049 – Performance Standards

[1] For lots located in cul-de-sacs or at knuckles, lot depth shall be reduced to 100 feet, and lot coverage shall be increased to 70%.

[2] Covered, non-enclosed patios may encroach up to 8’.

5. Sec. 9.04.017 Mixed-Density Residential (MD) District

(c) Dimensional Standards. Development in the Mixed-Density Residential (MD) district shall follow Table 10: Mixed-Density Residential (MD) District Single-Family Garden Home, Single-Family Attached, Duplex Dimensional Standards.

Table 10: Mixed-Density Residential (MD) District Dimensional Standards

Mixed-Density Residential (MD) District Single-Family Garden Home Dimensional Standards		
Lot Requirements		
A	Lot Area (min.)	4,400 square feet
B	Lot Width (min.)	25 feet
C	Lot Depth (min.)	80 feet
D	Lot Coverage (max.)	70%
Setback Requirements		
E	Front Yard (min.)	20 feet (Front Entry) 10 feet (Rear Entry)
F	Rear Yard (min.) [3]	10 feet (Front Entry) 20 feet (Rear Entry)
G	Side Yard (min.)	5 feet or 1 foot / 9 feet split (minimum 10 feet between buildings)
H	Corner Side Yard (min.)	15 feet
Building Requirements		
I	Building Height (max.)	35 feet
Additional Applicable Requirements within the Zoning Ordinance		
Sec. 9.04.041 – Dimensional Regulations Sec. 9.04.042 – Site Design Requirements Sec. 9.04.043 – Parking Sec. 9.04.044 – Loading Sec. 0.04.045 - Landscaping		Sec. 9.04.046 – Screening and Fencing Sec. 9.04.047 – Outdoor Lighting Sec. 9.04.048 – Trash Sec. 0.04.049 – Performance Standards

Mixed-Density Residential (MD) District Single-Family Attached Dimensional Standards		
Lot Requirements		
A	Lot Area (min.)	1,750 square feet per unit
B	Lot Width (min.)	25 feet
C	Lot Depth (min.)	70 feet
D	Lot Coverage (max.)	70%
Setback Requirements		

E	Front Yard (min.)	20 feet (Front Entry) 10 feet (Rear Entry)
F	Rear Yard (min.) [3]	10 feet (Front Entry) 20 feet (Rear Entry)
G	Side Yard (min.)	5 feet
H	Corner Side Yard (min.)	15 feet
Building Requirements		
I	Building Height (max.)	35 feet
Additional Applicable Requirements within the Zoning Ordinance		
Sec. 9.04.041 – Dimensional Regulations Sec. 9.04.042 – Site Design Requirements Sec. 9.04.043 – Parking Sec. 9.04.044 – Loading Sec. 0.04.045 - Landscaping		Sec. 9.04.046 – Screening and Fencing Sec. 9.04.047 – Outdoor Lighting Sec. 9.04.048 – Trash Sec. 0.04.049 – Performance Standards

Mixed-Density Residential (MD) District Duplex Dimensional Standards		
Lot Requirements		
A	Lot Area (min.)	2,000 square feet per unit
B	Lot Width (min.)	25 feet
C	Lot Depth (min.)	80 feet
D	Lot Coverage (max.)	60%
Setback Requirements		
E	Front Yard (min.)	20 feet (Front Entry) 10 feet (Rear Entry)
F	Rear Yard (min.) [1]	10 feet (Front Entry) 20 feet (Rear Entry)
G	Side Yard (min.)	5 feet
H	Corner Side Yard (min.)	15 feet
Building Requirements		
I	Building Height (max.)	35 feet
Additional Applicable Requirements within the Zoning Ordinance		
Sec. 9.04.041 – Dimensional Regulations Sec. 9.04.042 – Site Design Requirements Sec. 9.04.043 – Parking Sec. 9.04.044 – Loading Sec. 0.04.045 - Landscaping		Sec. 9.04.046 – Screening and Fencing Sec. 9.04.047 – Outdoor Lighting Sec. 9.04.048 – Trash Sec. 0.04.049 – Performance Standards

[1] Covered, non-enclosed patios may encroach up to 8'.

Sec. 9.04.028 Use Table

Table 19: Use Table

Land Use	SF-10.5	SF8.4	SF-7.2	SF-6.0	MD	C-1	C-2
Radio, TV, or Microwave Operations, Commercial	P	P	P	P	P	P	P

6. Section 9.04.042 Site Design Requirements

(c) Single-Family and Two-Family Residential Standards.

(5) House Repetition.

(A) Within residential developments, single-family and two-family dwellings with substantially identical exterior elevations can only repeat every four (4) lots when fronting the same right-of-way including both sides of the street.

(B) Homes side by side or across the street within one house (directly across the street or “caddy corner’ across the street) shall not have substantially identical exterior elevations.

(6) Building Materials

(A) Exteriors. The exterior of each primary residence on a Lot shall be constructed in accordance with the Building Material Guidelines table below.

(B) “Masonry” may include brick or stone stacked and mortared in place (stone means granite, limestone, marble, or other naturally occurring stone), stucco consisting of exterior Portland cement, hand-applied in three coats to a minimum thickness of three-quarters of an inch (3/4”), concrete tilt-wall or other concrete finish techniques, or other similar products. For all exterior plan types, cementitious siding products may be used in areas where it is not structurally feasible to support brick or stone.

Building Material Guidelines	
First Floor	A minimum of 85 percent masonry is required for the entire first floor. The front and sides of each elevation must be masonry, with only the rear to have other materials. Rear masonry is required on any house that backs to Cowan Road and FM 455.

Masonry Materials

- Brick
  - Brick shall meet specifications established by the Brick Institute of America.
  - Concrete brick is not allowed.
  - Jumbo bricks are not allowed.
- Mortar Joints
  - Mortar joints shall be tooled; no "slump" joints are permitted.

Non-Masonry Materials

- Siding
  - Siding material may be cementitious Hardie-Plank or fiber planking.
  - Plywood, particle board and vinyl are prohibited.
- Trim/Wood
  - All trim and wood shall be smooth and painted or stained.
  - Stained wood must be sealed.
- Metal
  - Exposed metals must be anodized aluminum, bronze, copper or painted galvanized steel.

Exclusions. Roofs, eaves, dormers, soffits, windows, gables, doors, garage doors, decorative trim, and trim work are not required to be constructed of masonry.

Prohibited Elements. Highly reflective finishes on exterior surfaces (other than non-mirrored glass or on surfaces of hardware fixtures). Mirrored glass.

(7) Roofs & Chimneys

(A) Accepted Roof Materials. Roofing materials shall be limited to architectural shingles of weathered wood or black colored, non-reflective metal, clay, tile or architectural composition shingles with a minimum rating of 30 years. All shingles must meet or exceed applicable local, FEMA, FHA and VA regulations. No three-tab shingles are permitted.

(B) Chimneys. Chimney style must be appropriate for the style of the home and may be brick or other masonry matching with the same permitted colors and materials as permitted on the body of the house; provided however, that any chimney located on the interior portion of the roof may also include cementitious materials solely or in addition to the brick or other masonry. If a chimney or fireplace chase is located on the side of a residence, then it is required to be constructed of masonry.

(8) Gutters/Downspouts/Drains

(A) All residences shall be constructed with gutters and downspouts. Gutters and downspouts shall match the color of the existing trim of the residence.

(9) Floor Plate

(A) The minimum Plate height for the first floor shall be nine (9) feet; 8-ft floor plate along a side elevation that are disguised across the front elevation and that "pop-up" to 9-feet within the residence is allowed. In addition, the minimum combined plate height for two story elevations shall not be less than eighteen (18) feet.

(10) Screening and Placement

(A) Mechanical equipment, trash receptacles, equipment, wood piles and other miscellaneous outdoor storage must be visually screened from public view and neighboring Lots by a solid screening wall/fence or landscaping sufficient for screening.

(d) Nonresidential Standards

(1) Building Articulation

(A) Single- and multi-tenant buildings < 50,000 square feet

i. All buildings shall utilize façade offsets and appropriate fenestration, to add variation and visual interest to an elevation and to break up long uninterrupted walls or elevations.

ii. Elevations that are 50 feet or longer in horizontal length require at least two offsets (projection or recess) from the primary façade plane of at least 18 inches deep and 4 feet wide.

iii. The height of those offsets is equal to the building's height at the location of the offset.

(B) Single- and multi-tenant buildings 50,000 square feet and larger

iv. All buildings shall utilize either façade offsets and appropriate fenestration, color variations, alternative building materials, or other architectural treatments, to add variation and visual interest to an elevation and to break up long uninterrupted walls or elevations.

v. Elevations that are 50 feet or longer in horizontal length require at least one of the following: at least two offsets (projection or recess) from the primary façade plane of at least 18 inches deep and 4 feet wide, color variations, alternative building materials, or other architectural treatments.

vi. The height of those offsets, color variations, alternative building materials, or other architectural treatments is equal to the building's height at the location of the application.

(2) Roof Treatment

(A) Long uninterrupted roof lines and planes shall be broken into smaller segments through the use of scaled gables or dormers, change in height, changes in roof form, type or planes that typically correspond to offsets in the building's façade, or other appropriate architectural elements.

(B) Parapet roof lines shall feature a well-defined cornice treatment or another similar element to visually cap each building elevation.

(3) Fenestration

(A) Single- and multi-tenant buildings < 50,000 square feet : The use of recessed windows, awnings, sills, drip caps, projecting trim casing or surrounds, projecting muntins or mullions, and other elements is required.

(B) Single- and multi-tenant buildings 50,000 square feet and larger do not require fenestration.

(C) Any glass with a visible light reflectance rating of 25% or greater is prohibited.

(4) Elements. All buildings or developments shall be required to provide at least two of the following elements:

(A) The primary entrance for all buildings shall feature a protected entry

through the use of a recessed entry, porte-cochere, awning, canopy, or similar feature that serves the same purposes. The covering shall be at least three feet in depth when measured from the face of the adjoining façade.

(B) All building elevations shall feature at least at least two facade offsets (recess or projection) five feet in depth for every 50 feet of horizontal length.

(C) All building elevations shall feature at least two distinct roof lines or a roof parapet with cornice design or similar element.

(D) All primary and secondary building entrances, excluding emergency exits and service doors, feature a recessed entry, canopy, awning, or similar sheltering feature of at least 50 square feet.

(E) Single- and multi-tenant buildings greater than 50,000 square feet shall provide least one of the following: at least two offsets (projection or recess) from the primary façade plane of at least 18 inches deep and 4 feet wide, color variations, alternative building materials, or other architectural treatments.

7. Section 9.04.044 Loading

(d) Standards.

(5) Location. A loading space:

(B) Must be located within the same development as the building or use served;

(C) Is prohibited from projecting into a sidewalk, street, or public right-of-way, including any maneuvering area;

(D) Is prohibited from being located between the front building line and the lot line;

(E) Must be placed to the rear or side of buildings in visually unobtrusive locations;

(F) Must be set back a minimum distance of 100 feet (35 feet for Self-Storage (Mini-Warehouse) from any adjacent residential zoning district or use;

(G) Must be se back a minimum distance of 50 feet from any public street or front property line; and

(H) Must be oriented away from the street frontage.

8. Section 9.04.045 Landscaping

(f) Minimum Landscaping Requirements.

(2) Parking Lots.

(A) Landscape areas within parking lots shall be at least 162 square feet in size with approximate dimensions of 9 feet wide by 18 feet deep.

(4) Residential Development

Table 27: Residential Planting Requirements

	Trees required per lot (Include front yard tree requirement) Canopy / Ornamental	Minimum Trees Required in Front yard Canopy / Ornamental
SF 10.5	3 / 5	2 / 2
SF 8.4	3 / 4	2 / 1 or 1 / 3
SF 7.2	2 / 4	2 / 1 or 1 / 3
SF 6.0	2 / 3	1 / 2
MD	1 / 2	1 / 1
Note: 1 Street tree shall count as 1 required front yard tree		

(h) Tree Preservation.

(1) Trees located with the tree preservation areas identified on Exhibit F - "Tree Preservation" shall be preserved with the exception of trees that must be removed to allow for the construction of public infrastructure improvements.

(2) The Developer shall plant one large tree (minimum of three-inch caliper {measured at four feet above base of the tree} and seven feet height at the time of planting) per 50 linear feet of screening wall and one ornamental tree per 30 feet of screening wall. Trees may be grouped or clustered to facilitate site design.

ARTICLE 9.05 SIGN ORDINANCE

1. **Section 9.05.018 Detached Signs**

(c) Subdivision Entry Signs



(1) Definition.

Subdivision Entry Sign. A sign which may be a freestanding monument or attached to a subdivision wall located at the entry of a platted subdivision from a local, collector, or arterial street.

(2) Standards.

Generally. Table 3-7 establishes the standards for subdivision entry signs.

Table 3-7: Subdivision Entry Sign Standards

Sign District → Requirement ↓	**SF**	**MD**	**CM**
General			
Allowed?	Y	Y	N
Permit Required?	Y	Y	--
Number per entrance (max.)	2	2	--
Dimensions			
Sign Area (max.)	200 sf	200 sf	--
Sign Height (max).	15 ft	15 ft	---

Setbacks			
From ROW	10 ft	10 ft	--
Features			
Electronic Message Center	N	N	--
Changeable Copy	N	N	--
Channel Letters	Y	Y	--
Internal Illumination	N	N	--
External Illumination	Y	Y	--
Halo Illumination	Y	Y	--
Additional Information			
Key	Y = yes, a permit is required or the feature is allowed | N = no/ not allowed | NR = the sign type or characteristic is allowed for nonresidential uses only | sf = square feet | ft = feet | "-" = the standard does not apply		
Sign District Summary	SF = SF-10.5 - SF-6.0 districts | CM = C-1 and C-2 districts		

(B) Number and Location

(i) Two (2) subdivision entry signs may be located at the intersection of a collector or arterial street and an entry street or private driveway into a subdivision. These signs shall be located on an HOA lot.

(ii) Subdivision entrances from a right-of-way greater than 60 feet shall require signage. Secondary entrance connecting to other neighborhoods may be allowed but are not required.

(C) Design and Installation.

(i) Subdivision entry signs shall be constructed with stone, brick, concrete, metal, routed wood planks or beams, or similar durable, weatherproof materials.

(ii) All subdivision entry signs shall be landscaped around the base of the sign in an area equal to four square feet for each square foot of sign areas. In case where the location of the sign could not accommodate such landscape areas, the area may be reduced up to 50% at the Directors' discretion.

(iii) When electrical service is provided to a subdivision entry sign, all electrical service shall be underground.

ARTICLE 9.07 TREE PRESERVATION

The tree preservation ordinance is not applicable to this development.

The existing trees in the areas highlighted in green and blue on Exhibit F – "Tree Preservation" shall be preserved except those needing to be removed for public infrastructure or floodplain valley storage. This preservation along with all new plantings shall fulfill all requirements for mitigation. The remainder of the existing trees may be removed without penalty and are not subject to mitigation.

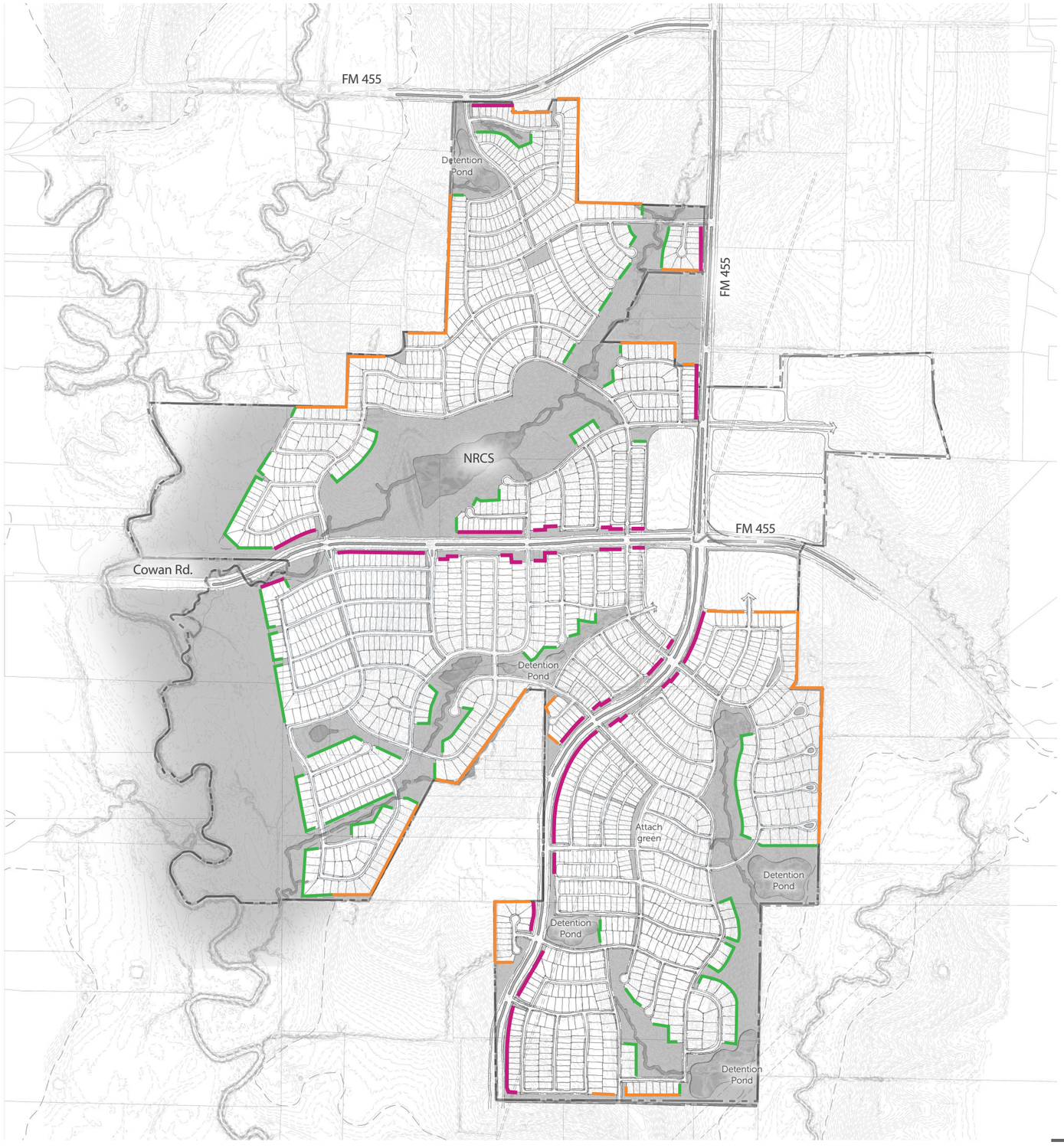

Legend

- Site boundary
- Masonry
- Wood Fence
- Ornamental Metal

Fence types are conceptual and subject to change at time of final design.

OAK RIDGE | EXHIBIT D - FENCE EXHIBIT (04/2025)

TRACING PAPER
PLANNING + DESIGN

tri pointe HOMES

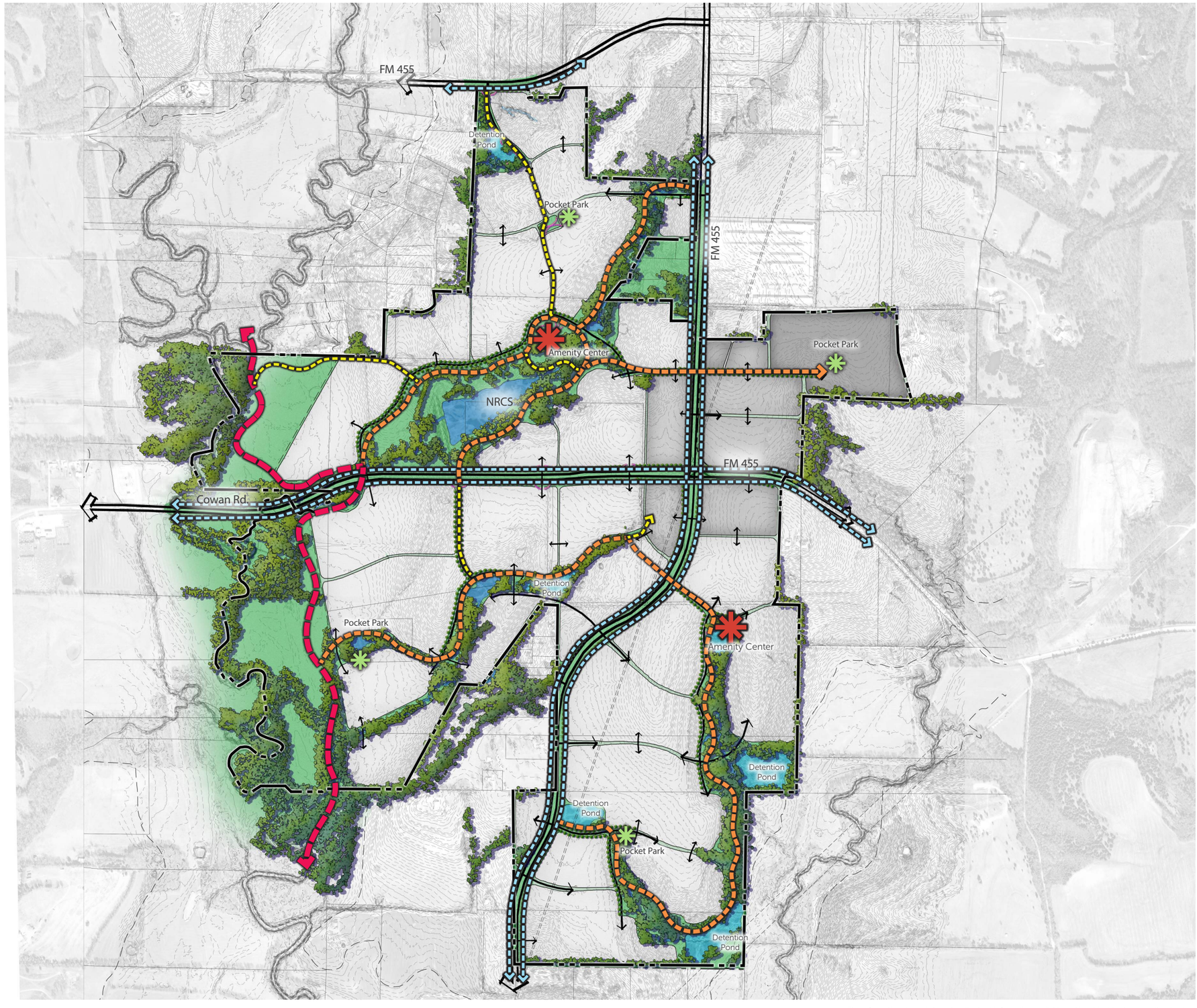

Legend

- Site Boundary
- Lake and Detention
- Open Space
- Amenity Center
- Pocket Park
- Regional Trail - 12′ Concrete
- Community Trail - 10′ Concrete
- Neighborhood Trail - 6′ Concrete
- Arterial Sidewalk - 6′ Concrete

Note: Open spaces within the property that include a lake, detention pond, amenity center, pocket park, trail corridor, and/or landscape buffer shall be common area lots that are owned and maintained by the HOA. All said spaces shall be open to the general public except the amenity centers which shall be reserved for private (homeowner) access only.

The information shown is based on the best information available and is subject to change without notice.

0 250′ 500′ 1000′

OAK RIDGE | EXHIBIT E - TRAIL AND OPEN SPACE LAYOUT (04/2025)

TRACING PAPER PLANNING + DESIGN

N
W E
S
0 400' 800'
GRAPHIC SCALE 400'

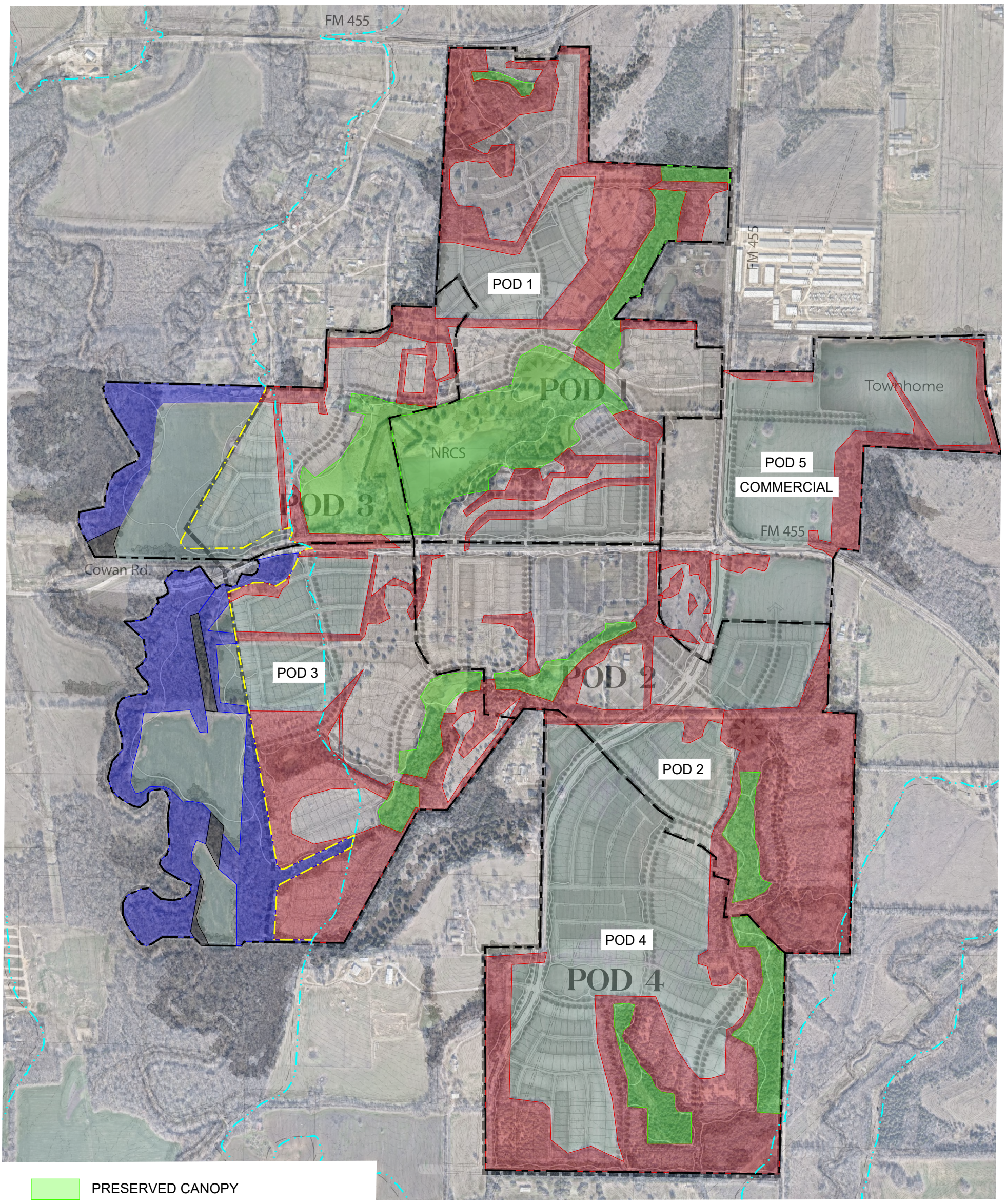

PRESERVED CANOPY

REMOVED CANOPY

PRESERVED CANOPY IN FLOODPLAIN

REMOVED CANOPY IN FLOODPLAIN

PROPERTY BOUNDARY

POD BOUNDARY

100YR FLOODPLAIN (PRE-DEVELOPMENT)

100YR FLOODPLAIN (POST-DEVELOPMENT)

EXHIBIT F
TREE PRESERVATION

Oak Ridge

Collin County, Texas

Kimley»Horn
6160 Warren Parkway, Suite 210
Frisco, Texas 75034
972-335-3580
State of Texas Registration No. F-928

April 2025

NOTE: THIS PLAN IS CONCEPTUAL IN NATURE AND MAY HAVE BEEN PRODUCED WITHOUT THE BENEFIT OF A SURVEY OR CONTACT WITH THE CITY, COUNTY, ETC.

DWG NAME K:\FRI_CIV\IL\063218000-OAK RIDGE\CAD\EXHIBITS\PLANSHEETS\OPC EXHIBITS\OAK RIDGE TREE PRESERVATION EXHIBIT.DWG
LAST SAVED 4/28/2025 3:57 PM

Item No. 6.c.

Planning & Zoning Commission Agenda
Staff Report

Meeting Date: 9/9/2026
Staff Contact: Ashley Saucedo

AGENDA ITEM:
Approve Oak Ridge, Phases 1 and 2, Preliminary Plat (PP 26-0005)

SUMMARY:
685 single-family residential lots and 18 Homeowners' Association lots on 228.1± acres on the southeast corner of County Road 285 and County Road 827.

Recommended for approval as submitted subject to approval of the associated zoning request.

BACKGROUND:

Date Submitted	8/5/2026	**Jurisdiction**	City of Anna
Owner	OPP Oak Ridge LP		
Representative/Applicant	Kimley-Horn		
Requested Action	Approval of the Preliminary Plat		
Purpose	To build Single-Family Homes		
Land Area	228.1± acres		
Location	The southeast corner of County Road 285 and County Road 827		
Comp Plan Designation	Suburban Living		
Existing Zoning	Agriculture (AG)		

Surrounding Properties

	Land Use	**Zoning**	**Comp Plan Designation**
North	Vacant	Agriculture (AG)	Suburban Living / Community Commercial
East	Vacant	N/A (ETJ)	Suburban Living

South	Vacant	N/A (ETJ)	Suburban Living / Community Commercial
West	Vacant	N/A (ETJ)	Suburban Living

ATTACHMENTS:

1. Locator Map - Oak Ridge, Phases 1 and 2, Preliminary Plat (PP 26-0005)

Oak Ridge, Phases 1 and 2, Preliminary Plat
(PP 26-0005)

EAST FORK CIR

COWAN RD

COUNTY ROAD 828

W FM 455

COUNTY ROAD 827

COUNTY ROAD 287

COUNTY ROAD 937

DIAMOND J RD

COUNTY ROAD 285

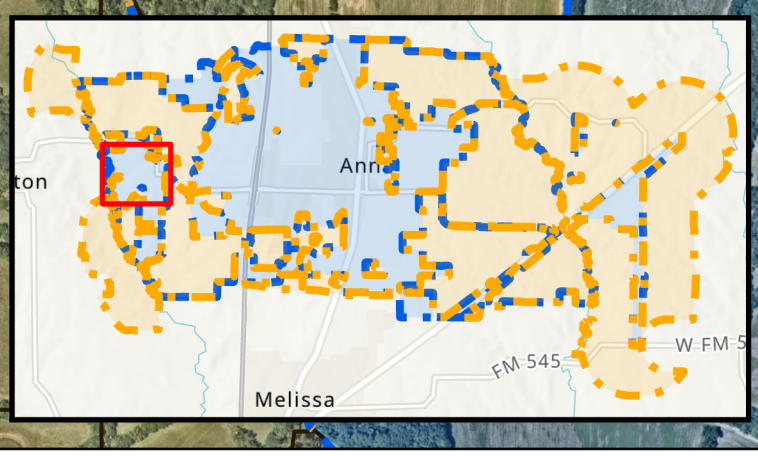

THE CITY OF Anna

N

Subject Property

ETJ

Parcels

City Limits

0 245 490 980 1,470 1,960

Feet

September 2026

Item No. 6.d.

Planning & Zoning Commission Agenda
Staff Report

Meeting Date: 9/9/2026
Staff Contact: Lauren Mecke

AGENDA ITEM:
Continue a Public Hearing/Consider/Discuss/Action on a recommendation regarding an Ordinance related to amendments to the Anna 2050 Comprehensive Plan.

SUMMARY:
Recommended for approval as submitted.

BACKGROUND:
Earlier this year, Development Services prepared and presented a housing report, attached for reference, which details Anna's current housing statistics. The information in the housing report, along with the previously approved entitlements, indicates that a re-evaluation of the Comprehensive Plan and development codes is necessary to establish updated regulations suitable for Anna's future development, preservation, and economic stability.

What is a Comprehensive Plan?
A Comprehensive Plan is a blueprint intended to guide the day-to-day decisions of elected officials and local government staff, while maintaining a long-range look at growth over a 10 - 30 year period. The Texas Local Government Code mandates prior to a municipality adopting zoning, the city must adopt a Comprehensive Plan including a Thoroughfare and Future Land Use Plan as components. The Comprehensive Plan is edited more frequently when there is rapid growth.

Anna's 2050 Comprehensive Plan

Year	Action	Population
2010	Previous Comprehensive adopted	8,279 (U.S. Census)
2015	Previous Comprehensive Plan amendment & Downtown Master Plan adopted	11,461
2017	Previous Comprehensive Plan amendment	12,680
2020	Anna 250 Comprehensive Plan Advisory Task Force meetings and community input meetings held	16,896 (U.S. Census)
2021	Anna 2050 Comprehensive Plan adopted	20,222

	along with Downtown Master Plan and Parks Master Plan	
2022	Master Thoroughfare Plan updated along with Impact Fees	23,528
2023	Master Thoroughfare Plan updated	27,501
2024	Community open house, Future Land Use Plan updated, PlaceTypes updated	31,986
2025	Master Thoroughfare Plan updated & Community open house for Parks Master Plan	35,245
2026	Parks Master Plan adopted	38,840 (estimate)

Recommendation
Staff recommends edits to the Comprehensive Plan including:

1. Refer the Downtown PlaceType to the Downtown Master Plan rather than outlining uses.
2. Remove references to multifamily, apartments and condominiums.
3. Update the Thoroughfare Plan.

ATTACHMENTS:
1. Draft (Master Thoroughfare Plan Update)
2. Reference (2026 Housing Data) - 2026 Comp Plan Amendment
3. Reference (MF Entitlements) - 2026 Comp Plan Amendment

Legend

- Major Highway
- Downtown Arterial
- Downtown Type A
- Downtown Type B
- M6D Major Arterial (TxDOT) (150' ROW) - Existing
- M6D Major Arterial (TxDOT) (150' ROW) - New
- M6D Major Arterial (120' ROW) - Existing
- M6D Major Arterial (120' ROW) - New
- M4D Minor Arterial (90' ROW) - Existing
- M4D Minor Arterial (90' ROW) - New
- C4U Major Collector (80' ROW) - Existing
- C4U Major Collector (80' ROW) - New
- C2U Minor Collector (60' ROW) - Existing
- C2U Minor Collector (60' ROW) - New
- Anna ETJ Limits
- Anna City Limits
- Floodplain

THE CITY OF Anna

Master Thoroughfare Plan

Downtown Inset Map

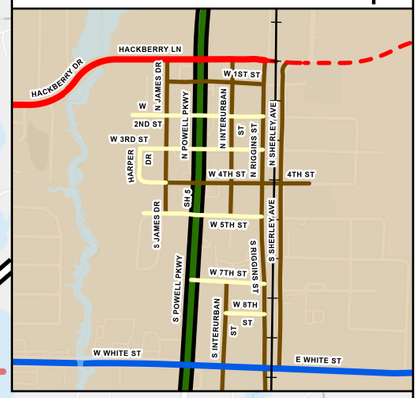

Kimley»Horn

CITY OF ANNA

Community Development Report

Our Community by the Numbers

Neighbors, Housing and Balance

Development Services

2026

DEMOGRAPHICS

Our Neighbors

Demographics Overview

32.4

Median Age

Anna is a young city with a vibrant workforce, significantly younger than the national average.

$99,375

Median Income

High median household income reflects a strong local economic foundation and purchasing power.

30,000+

Current Population

Population has almost doubled in just 5 years.

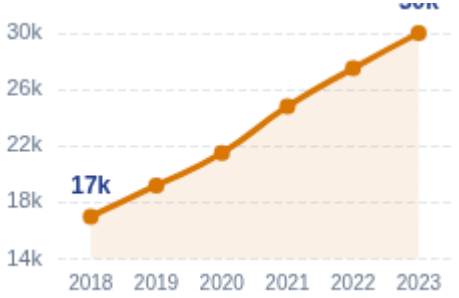

*All Demographic Data Derived from American Community Survey 2023

COMMUTING

Commuting Patterns

Workforce Movement Analysis

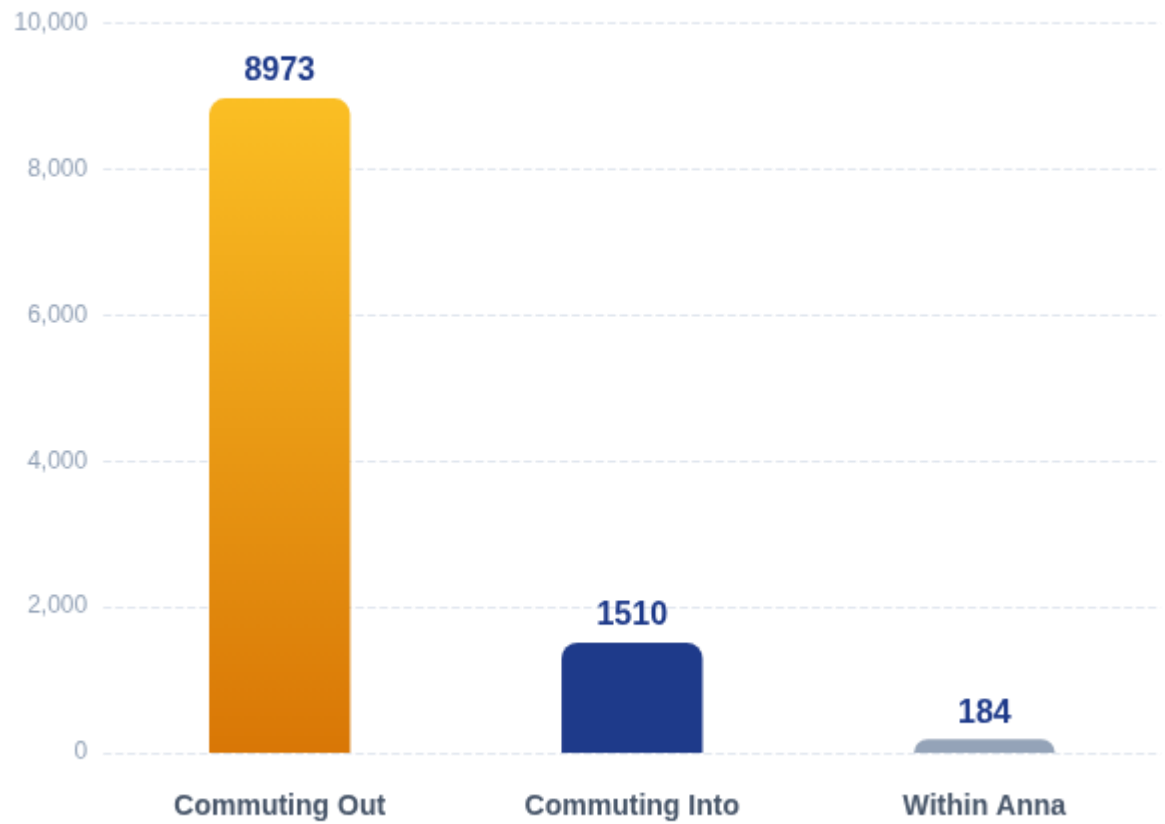

Key Insight

84%

of commuters are traveling **OUT** of Anna for employment every day.

Commuting Out	8,973
Commuting Into	1,510
Within Anna	184

MAPS

Contiguous Development

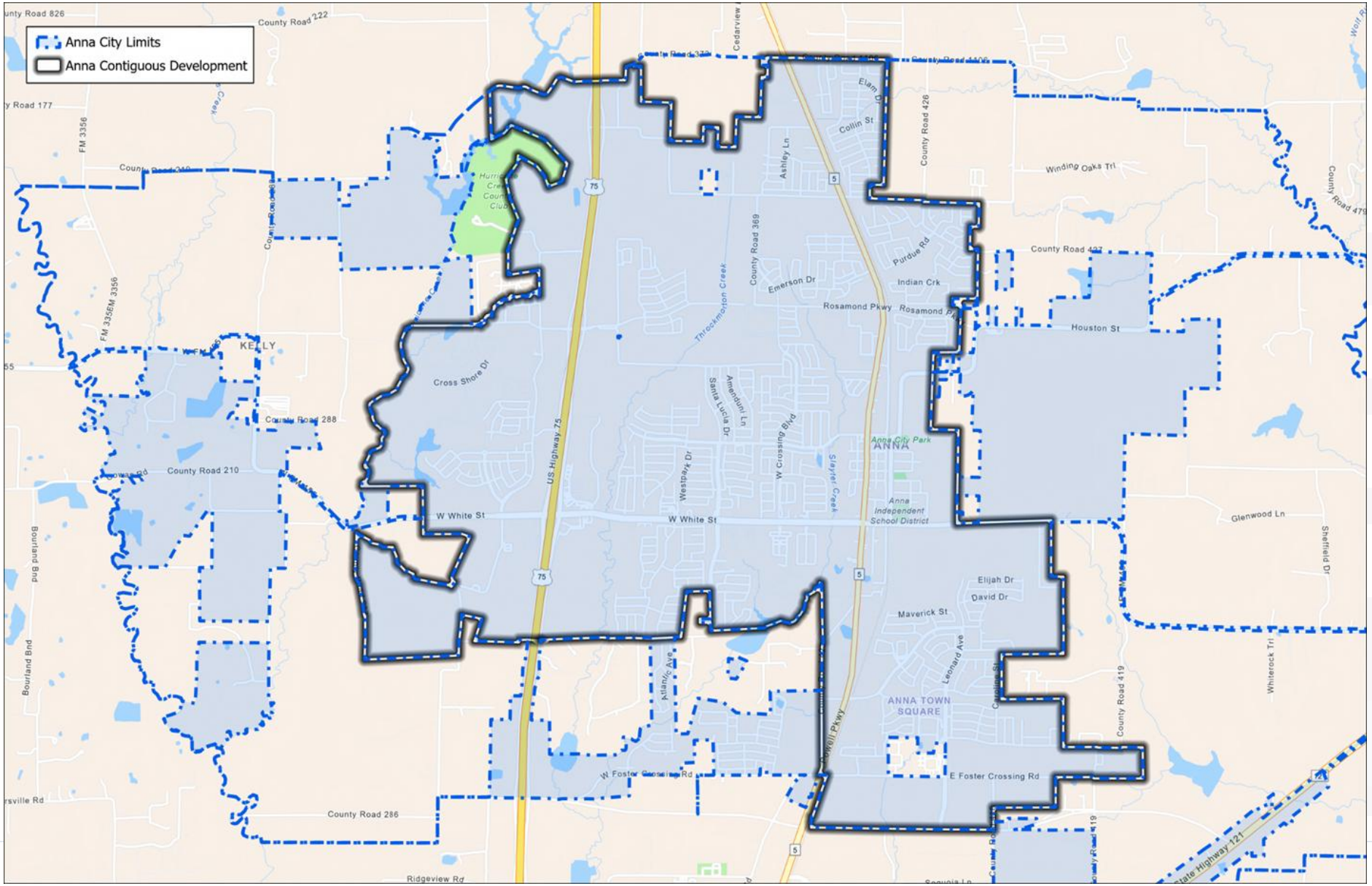

ETJ - Less than 20 acres

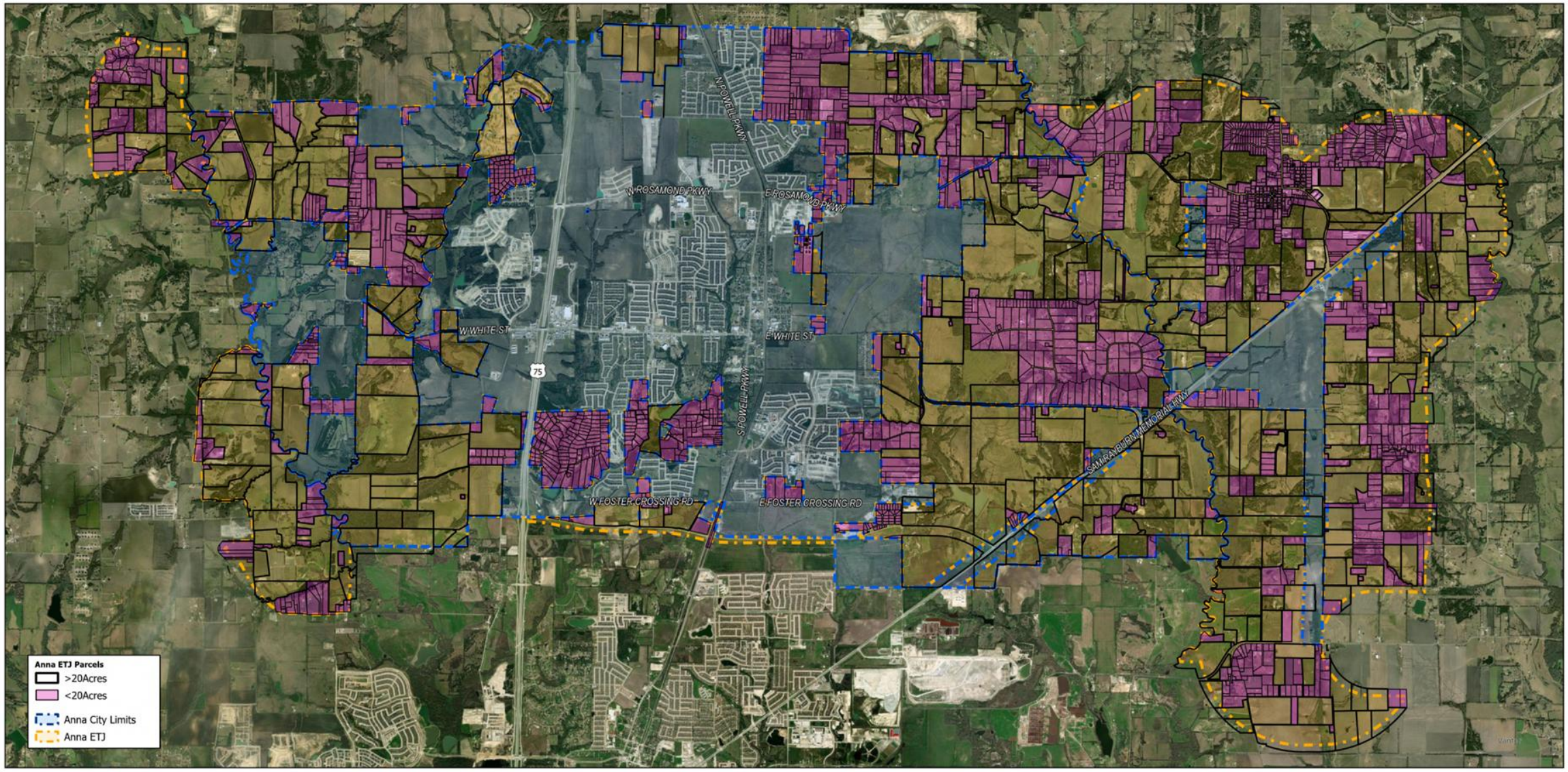

MAPS

ETJ- With Floodplain

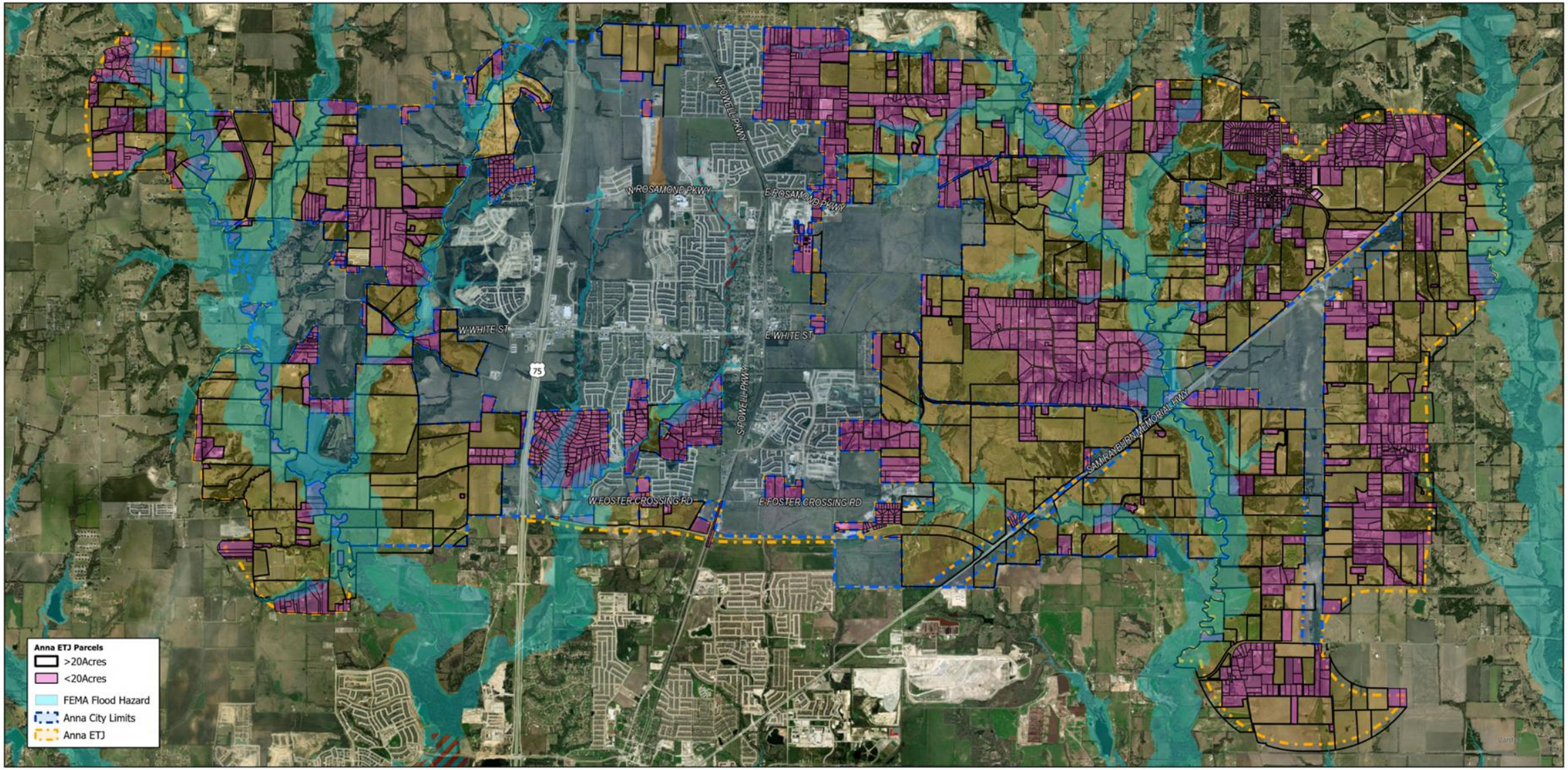

MAPS

ETJ- Landfill Radius

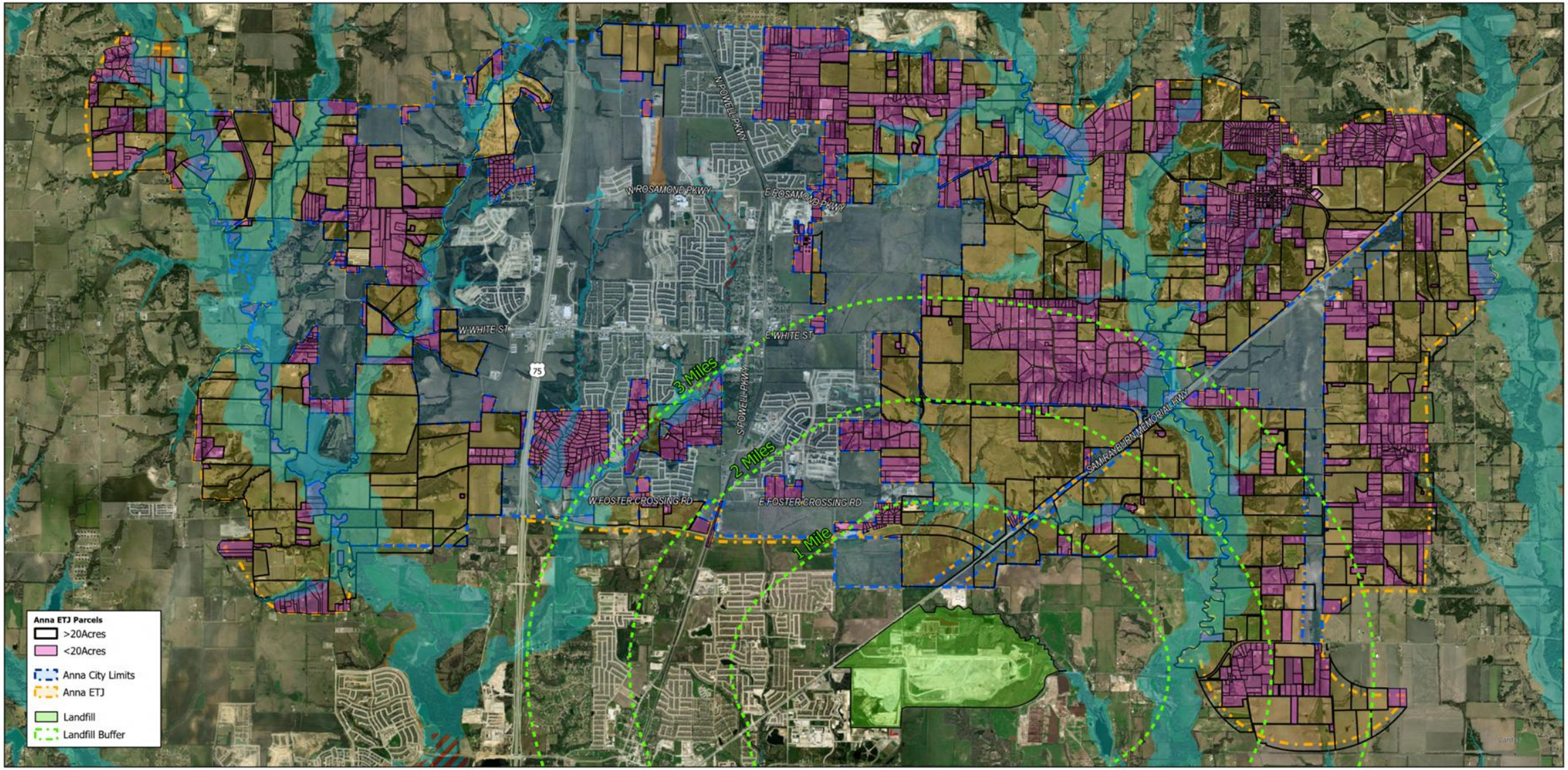

REFERENCE USE ONLY. CITY OF ANNA GIS. FEBRUARY 2026.

MAPS

AGENDA

Presentation Agenda

Key Topics for Discussion

01

Single Family Developments

Analysis of housing growth, lot inventory, and population impact.

02

Single Family Rentals

Overview of rental market penetration and neighborhood statistics.

03

Multi Family Developments

Status of apartment projects, occupancy rates, and future density.

DEVELOPMENT

Single-Family Developments

Growth & Impact Analysis

Status	Inventory Share	Lots	Pop. Est.
Existing	29% Share	8,484	21,210
Under Construction	43% Share	12,416	31,040
Entitled	16% Share	4,773	11,932
Pre-Entitlement	12% Share	3,327	8,318

Total Inventory

29,000

Single-family lots across all phases of development.

Projected Population

72,500

Estimated residents upon full build-out of current inventory.

Primary Driver

Single-family housing growth is an important economic development indicator.

* Population estimate based on household size of 2.5 people per single family home

* Entitled = Zoning and Platting approved

* DA = Development Agreement

HOUSING

Home Size Distribution

Square Footage Analysis

Average Home Size

2,131 SqFt

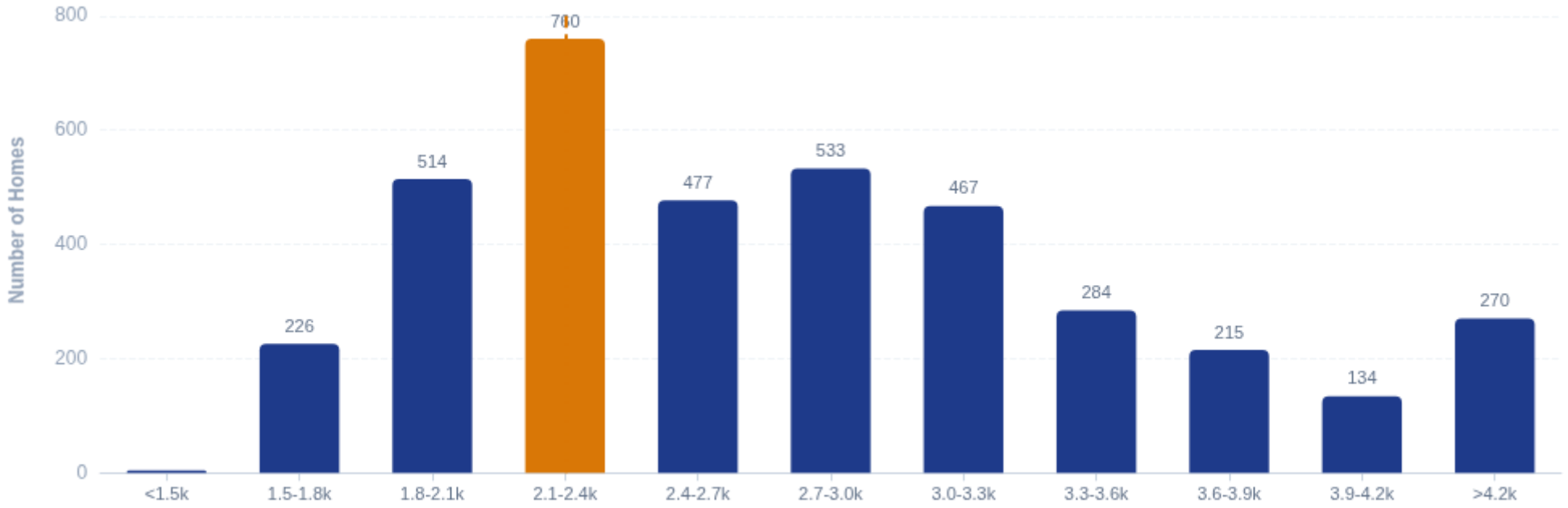

Majority of homes clustered between **1,800 - 3,000 SqFt**

Distribution reflects diverse housing stock suitable for various family sizes

VALUATION

Home Market Value

Distribution of Total Market Value

Average Market Value

$343,086

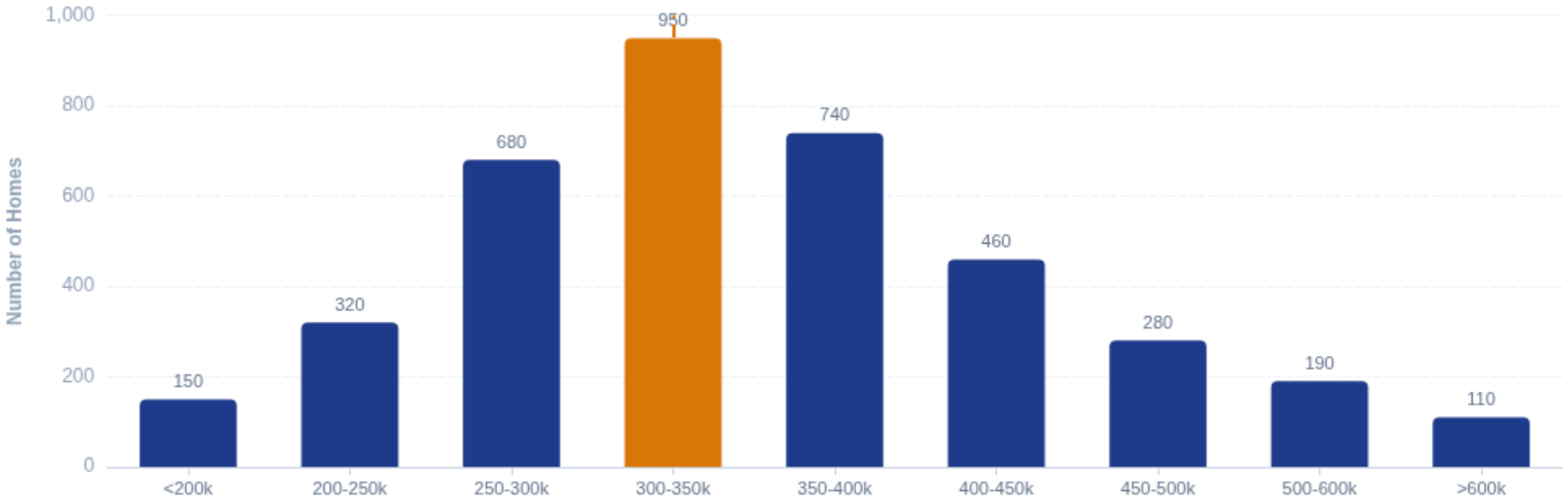

Strong concentration in the **$300k - $400k** range

Note: Rental rates typically will fluctuate as market value increases

AGE

Home Age Distribution

Effective Year Built Analysis

Average Year Built

2017 Year

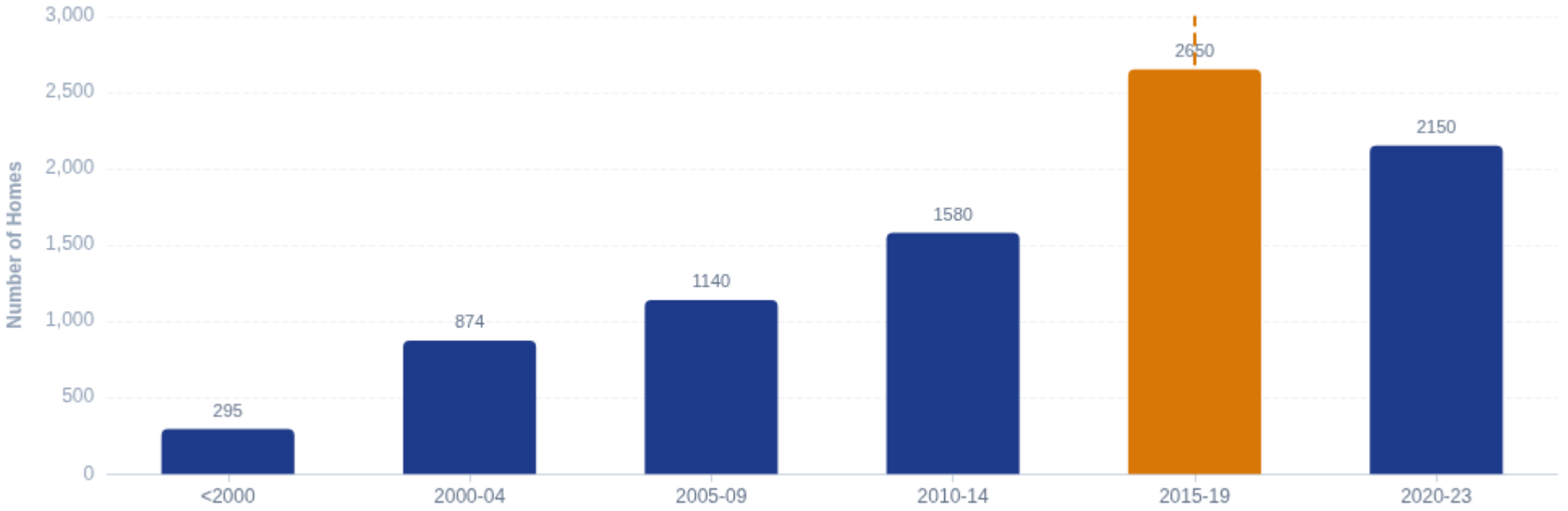

Majority of housing stock is **less than 10 years old**

RENTALS

Single-Family Rentals

Market Penetration Overview

Total Single-family Rentals
2,684
Registered properties

Avg Rental Rate
33.4%
Rentals / Total Current Lots

Market Correlation: Rental rate trends indicate an inverse relationship with relationship with market value—rental concentration typically decreases as property market value increases.

Developments Exceeding 40% Rental Rate

High Concentration Gradient

DEVELOPMENT	FINISHED LOTS	RENTALS	RENTAL RATE
Shadowbend	460	360	**78%**
Anacapri Phase 1	410	263	**64%**
Westfield	141	70	**50%**
Sweetwater Crossing	197	86	**44%**

*Based on City of Anna and CAD Data (2025)

TIMELINE

Single-Family Buildout Context

Understanding Construction Projections

What is "Buildout"?

Buildout refers to the point when all currently planned and entitled single-family lots within the city are fully constructed. This timeline helps us plan for infrastructure, schools, and city services.

Total Inventory

29,000

Entitled Single Family Lots

Completed

8,500

Existing Homes (29%)

Projected Completion Timeline

Start Date: 2026

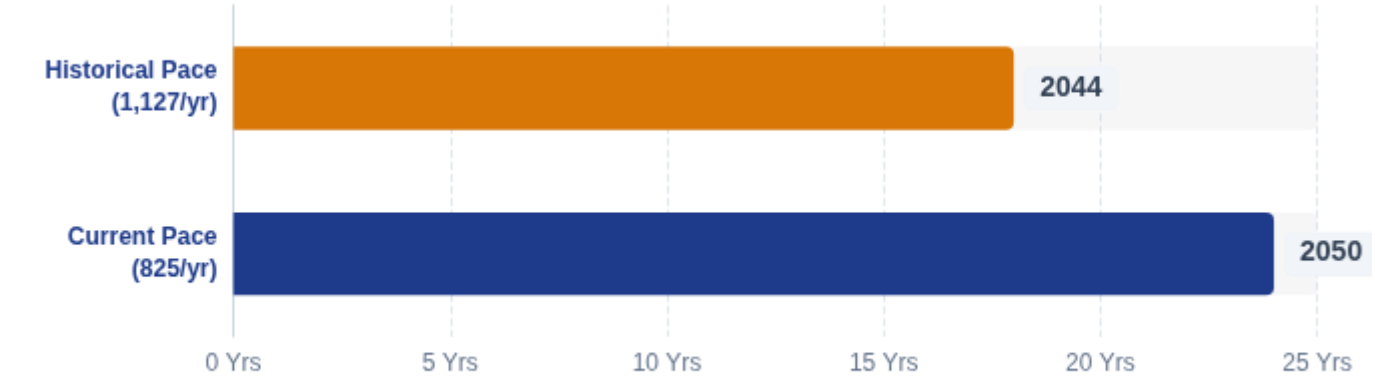

Historical Pace — 18 Years

Based on the robust **5-year average** of 1,127 homes/year. This assumes strong continued demand and economic stability.

Target Completion: 2044

Current Pace — 24 Years

Based on **2025 construction rates** of 825 homes/year. Reflects market normalization and higher interest rate environment.

Target Completion: 2050

Factors Affecting Rate:

- Interest Rates
- Material Costs
- Regional Migration
- Housing Supply
- Economic Conditions

DEVELOPMENT

Multi-Family Developments

Growth & Impact Analysis

Status	Inventory Share	Units	Pop. Est.
Existing 12% Share		1,834	4,585
Under Construction 13% Share		2,024	5,060
Entitled 72% Share		11,078	27,695
Pre-Entitlement 3% Share		427	1,068

Total Units

15,363

Multi-family units across all phases of development.

Projected Population

38,408

Estimated residents upon full build-out.

Occupancy Status

Current occupancy is ~70%. Rates are expected to rise as new developments stabilize.

* Population estimate is based on a 2.5x multiplier

* Entitled = Zoning and Platting approved

* DA = Development Agreement

TIMELINE

Construction Timeline

Multi-Family Buildout Projections

Projected Years to Full Buildout

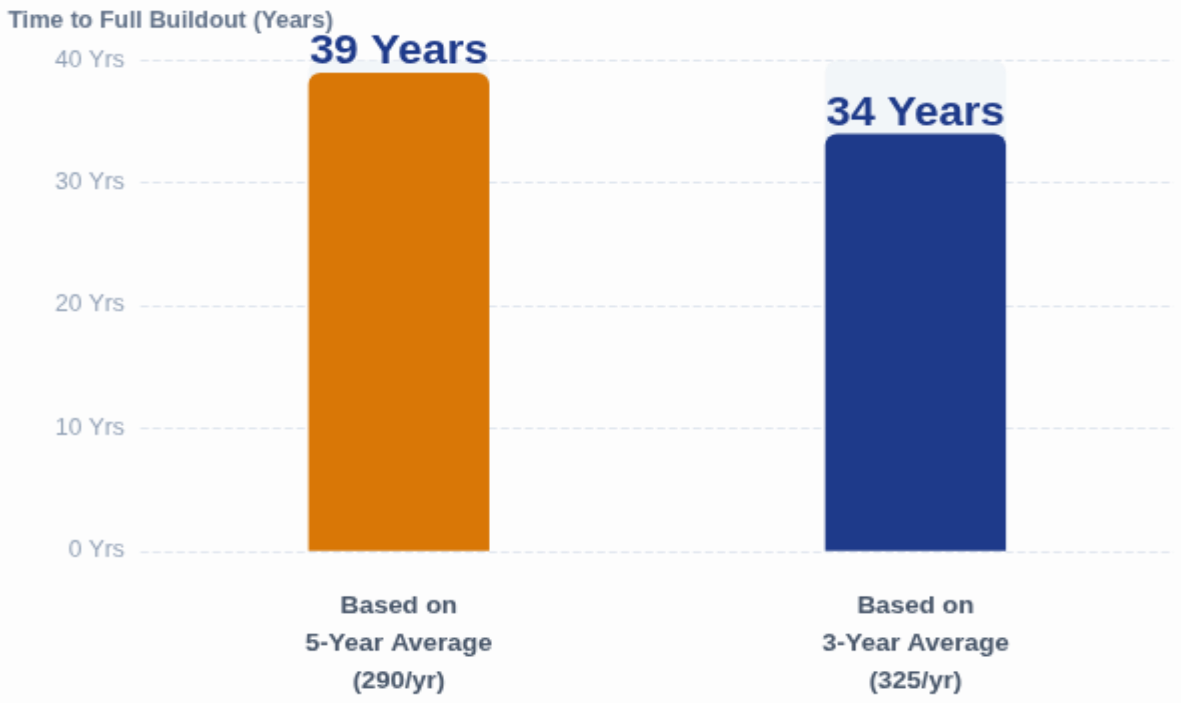

Past 5 Years

1,454 Units

Total multi-family units constructed, averaging **290 units annually** over the period.

Scenario 1
5-Year Avg Rate **39 Years**

Scenario 2
3-Year Avg (325/yr) **34 Years**

FUTURE

The Future

Policy Framework & Growth Vision

Policy Making Approach

Good > Better > **Best**

Successful policy making requires balancing both external market forces and internal community needs. We aim for the "Best" outcomes by carefully weighing these factors in every decision.

Strategic Incentives

Applying **Supply & Demand** principles to development incentives incentives allows us to attract high-quality projects.

- PID's
- TIRZ
- Ch. 380 Agreements

130,000+

Annual In-migration to DFW

Anna's population will continue to grow as migration to the DFW area rises. We are positioned to capture a significant share of this regional growth.

Key to Attraction

Diverse Development is essential. A healthy mix of Residential, Commercial, and City projects creates the vibrant community needed to attract new residents and businesses.

CONTACT

Thank You

Kaleb Kentner

Development Services

(972)-924-2616

kkentner@annatexas.gov

www.annatexas.gov

Name	Ordinance Number	Existing Units	Max Units	Notes
1508 N Powell Pkwy	Unknown	20	20	Five quadplexes on six lots Zoned SF-E &MF-1
404 N Powell Pkwy	2002-17 & 2001-04	2	4	Maximum in the ordinance
618 S Riggins St	Unknown	4	4	Two duplexes on one lot Built in 1998 Zoned TF
Anna Mobile Home Park	Unknown	100	100	One quadplex building and 96 mobile/ manufactured homes. MF-1 zoning. Built in 1976 MH-2 zoning
Anna Station	977-2022	162	162	162 Units shown on site plan
Cunningham Mobile Home Park	2006-278 (Annexation)	21	21	Existed prior to annexation One home built in 1941 and four houses built in 1970 16 mobile/ manufactured homes SF-E zoning.
DHI Anna, Block A, Lot 1	881-2020	130	130	130 units shown on the site plan
Palladium	703-2015; 129-2004	180	180	Maximum capacity for current design. 180 units as shown on the site plan
Palladium East Foster Crossing	941-2021	239	239	29 units/gross acre; 239 units as shown on the site plan
Parmore Anna	943-2021; 703-2015; 129-2004	185	185	24 units/ac if freestanding; 36 units/ ac when above commercial uses. Approx 27.8 ac remain undeveloped within zoning tracts permitting multiple-family dwelling units. 185 units are shown on the site plan.
The Grand at Anna Town Square	942-2021; 787-2018; 768-2018; 129-2004	0	280	Maximum in the ordinance; 280 units as shown on site plan
The Quinn	846-2020	317	317	301 units shown on the site plan
Yardly at Anna Town Center	974-2022; 648-2014	157	157	35 units/gross acre; 157 units shown on site plan
Total Max Units			1799	

DISCLAIMER: Maximum number of units does not account for open space, parking, and other requirements and may be reduced during site plan review

Name	Ordinance Number	Existing Units	Max Units	Notes
Anacapri, Block A, Lot 4	887-2020	0	300	Maximum in the ordinance; 300 units as shown on site plan
Cover 2 Anna	1096-2024-03	0	357	357 shown on site plan. 500 per ordinance.
DHI Anna, Block A, Lot 2	881-2020	0	234	234 units as shown on site plan
Jefferson at Anna Finley	980-2022; 787-2018; 768-2018; 129-2004	0	320	Maximum in the ordinance; 320 units as shown on site plan
Meryl Street	972-2022	0	340	340 units shown on site plan
The Grand at Anna Town Square, Phase 2	983-2022; 787-2018; 768-2018; 129-2004	0	222	222 units shown on site plan
Villages of Waters Creek	978-2022; 861-2020	0	251	251 units as shown on site plan
Waterview	843-2020	0	300	300 units as shown on site plan
Total Max Units			2324	

Name	Ordinance Number	Existing Units	Max Units	Notes
Anacapri, Block A, Lot 5	887-2020	0	300	Maimum in the ordinance
Anna 23	1109-2024-07	0	300	135 one-bedroom, 135 two-bedroom, 30 three-bedroom units, unit density of 19.78
Anna Gray 50 Multi-Family	506-2010	0	300	
Anna Ranch	088-2023-12; 933-2021; 323-2007	0	655	Destiny not to exceed 25 units/ acre, 26.2+- acres
Crystal Park Multi-Family	969-2022	0	512	25 units/gross acre
DHI Anna, Block A, Lot 3	881-2020	0	234	234 units as shown on preliminary site plan
Downtown Apts	575-2012; 584-2012; 586-2012; 666-2014; 683-2015	0	137	32 units/acre maximum; Approx. 4.29 acres
Dreamville Anna	975-2022; 648-2014; 631-2013	0	202	25 units/gross acre; 202 units shown on site plan
Gateway at Buddy Hayes, Block A, Lot 2R	1024-2022	0	312	312 units shown on site plan
Gateway at Buddy Hayes, Block C, Lot 1R	1024-2022	0	211	211 units shown on site plan
Hurricane Creek Commercial	860-2020	0	450	C-2 base zoning with MF-2 being allowed by-right.
Liberty Hills	2024-05-1621	0	3000	Maximum in the ordinance; Res. No. 2024-05-1621 replaced Ord. No. 537-2011
Pecan Grove Multi-Family	2002-27A	0	484	22 units/gross acre
Salida Del Sol	989-2022	0	6	Townhome develpoment
Sherley Farms	2024-12-1716	0	800	
Skorburg Anna Ranch	1054-2023-06	0	880	25 units/acre
The Preserve	1057-2023-06	0	700	700 maximum total units; 210 max two- & three- bed units in the ordinance
Villages of Hurricane Creek – North (Senior Living)	932-2021	0	115	Maximum in the ordinance Quadplexes/ Single-Family, attached only
WBK (West of U.S. HWY 75 north & south of W. White Street)	134-2004	0	1000	MF-2 zoning (25 units/ acre)
Woodland Estates	1053-2023-06	0	180	Pre-annexation agreement
Total Units			10778	

DISCLAIMER: Maximum number of units does not account for open space, parking, and other requirements and may be reduced during site plan review

N

0 1 2 Miles

DISCLAIMER: This map and information contained in it were developed exclusively for use by the City of Anna. Any use or reliance on this map by anyone else is at that party's risk and without liability to the City of Anna, its officials or employees for any discrepancies, errors, or variances which may exist.

Multi-Family Developments

Source: City of Anna GIS
Date: 7/31/2025

Legend

- Existing Multi-Family
- Actively Under Construction
- Entitled Multi-Family
- Parcels
- City Limits
- Anna ETJ

THE CITY OF Anna

Item No. 6.e.

Planning & Zoning Commission Agenda
Staff Report

Meeting Date: 9/9/2026
Staff Contact: Nyssa Galatas

AGENDA ITEM:
Conduct a Public Hearing on a recommendation regarding an Ordinance adopting a Historic Preservation Ordinance.

SUMMARY:
The City of Anna does not currently have an Ordinance in place to identify, designate, and guide preservation of historic buildings and places. The attached draft text as adopted would establish procedures designating historic places, maintenance requirements, creation of a Historic Commission, and demolition permits.

Recommended for approval as submitted. This item is tentatively scheduled for the September 22, 2026 City Council meeting.

BACKGROUND:
This item is a draft Historic Preservation Ordinance that establishes procedures for designating historic places in Anna as well as the processes and procedures for staff and the Historic Commission.

COMPATIBILITY
Anna 2050 Comprehensive Plan
Land Use Policy (LU) 8. *Anna property owners and developers will be encouraged to retain, protect, and enhance existing cultural and historic assets to maintain Anna's unique sense of place as the community continues to grow.*

Action 3.5. Code Update*. Update the City's development-related ordinances to align them with the vision expressed in this comprehensive plan and to accommodate the Future Land Use Plan.*

Placemaking Action 7.4 Historic Preservation Plan*. Develop a Historic Preservation Plan for Anna to identify those buildings and neighborhoods that should receive local protection and state and national recognition.*

Placemaking Action 7.5 Historic Preservation*. Establish a partnership among private interests to support historic preservation in Anna.*

Downtown Master Plan
Downtown Master Plan **Strategic *Policy 8.*** *The Anna Historical Society should continue to work closely with the City to ensure that historical assets and the character of Downtown is preserved and celebrated.*

Action 9.16. Historic District. *Conduct a study to evaluate the feasibility of delineating*

and designating a historic district to preserve any eligible historically significant buildings and sites and to capture the opportunity for programs and funding available to such a district.

As part of Action 3.5 of the Anna 2050 Comprehensive Plan, this is the first step needed to preserve Anna's historic resources as desired in the Comprehensive Plan and Downtown Master Plan.

ATTACHMENTS:

1. Draft (Historic Preservation Ordinance)

Model Ordinance

Historic Preservation Ordinance

Contents

Division 1. General
9.06.011. Purpose
9.06.012. Definitions
Division 2. Historic Preservation Commission
9.06.021. Creation
9.06.022. Organization
9.06.023. Powers and Duties
Division 3. Historic Preservation Officer
Division 4. Designation of Historic Landmarks
9.06.041. Property Owner-Initiated Designation
9.06.042. City-Initiated Designation
9.06.043. Review and Recommendation by the Historical Preservation Commission
Division 5. Designation of Historic Districts
9.06.051. Property Owner-Initiated Designation
9.06.052. City-Initiated Designation
Division 6. Criteria for Designation of Historic Landmarks and Districts
9.06.061. Purpose
9.06.062. Criteria for Designating Historic Landmarks
9.06.063. Criteria for Designating a Historic District
Division 7. Certificate of Appropriateness for Alteration or New Construction Affecting Landmarks or Historic Districts
9.06.071. Purpose
9.06.072. Review Required
9.06.073. Criteria
Division 8. Certificate of Appropriateness for Demolition, Removal, or Relocation
9.06.081. Purpose
9.06.082. Review Required
9.06.083. Criteria for Demolition or Removal
9.06.084. Criteria for Relocation
9.06.085. Criteria for Decision
9.06.086. Required Documentation
9.06.087. Demolition Delay
Division 9. Historic Preservation Guidelines
Division 10. Certificate of Appropriateness Application Procedure
9.06.101. Application
9.06.102. Historic Preservation Officer Review
9.06.103. Notification
9.06.104. Commission Hearing
9.06.105. Decision
9.06.106. Appeal
9.06.107. Changes in Building or Site Plans
9.06.108. Expiration
9.06.109. Extensions
9.06.110. Certification of Appropriateness
9.06.111. Compliance
Division 11. Economic Hardship Application Procedure
9.06.111. Procedure
Division 12. Enforcement
9.06.121. Work and Inspection
9.06.122. Stop-Work Order
9.06.123. Other Approvals
Division 13. Minimum Maintenance Standards
Division 14. Demolition by Neglect
9.06.141. Procedure

9.06.142. Emergency demolition, removal, or relocation
Division 15. Penalties

Division 1. General

9.06.011. Purpose. The City Council hereby declares that the protection, enhancement, and perpetuation of landmarks or districts of historical and cultural importance are necessary to promote the economic, cultural, educational, and general welfare of the public. It is recognized that the City of Anna represents a unique confluence of time and place that produced significant historic, architectural, and cultural resources. This article is intended to:

(a) identify, preserve, protect, and enhance the historic resources and districts which represent distinctive elements of Anna's history, architecture, and culture;

(b) foster civic pride and promote the city's unique history by encouraging the use of historic resources, attracting tourists, and celebrating its business community and neighborhoods through historic preservation, adaptive reuse, and revitalization;

(c) promote economic prosperity and welfare of the community; and

(d) provide an advisory resource to City Council regarding matters of historic preservation.

9.06.012. Definitions. For the purposes of these rules, the following terms, phrases, words, and their derivations shall have the meanings ascribed to them in this section or in the zoning regulations.

Addition means new construction added to an existing building or structure.

Alteration means any exterior change, demolition, or modification to a property within a historic district or on a structure receiving historic financial incentives, including but not limited to:

(a) Exterior changes to or modifications of structures, architectural details, or visual characteristics;

(b) Construction of new structures;

(c) Disturbance of archaeological sites or areas; or

(d) Placement or removal of exterior objects that affect the exterior qualities of the property.

Applicant. A person, or the person's designated and duly authorized agent or representative, seeking a designation or authorization. An Applicant may be any of the following: the property owner of record, an "owner" as defined in this section, the Historic Preservation Commission, or the City Historic Preservation Officer (HPO).

Architectural feature. The architectural elements embodying style, design, general arrangement, and components of the exterior of any building or structure.

Commission. The Anna Historic Preservation Commission created by this ordinance.

Contributing structure. The buildings, sites, structures, or objects that retain a recognizable degree of integrity, add to the historic character or cultural values of the area, and were constructed during a period of significance, typically at least 50 years old.

Demolition. An act or process (notwithstanding acts of God, criminal activity, etc.) which destroys a site or structure in its entirety, or which destroys a part of a site or structure and permanently impairs its structural, historic, or architectural integrity.

Exterior feature. The architectural style and general arrangement of the exterior of a structure, including but not limited to the kind and texture of the building material(s), and the type, style, and arrangement of all windows, doors, light fixtures, signs, and other appurtenant elements.

Historic designation. A structure, a group of structures, a site, an area, a district, or combination thereof, that has received designation from the city council.

Historic preservation. The protection, rehabilitation, restoration, or reconstruction of historically significant structures in an effort to preserve the historic character of Anna.

Historic preservation plan. A document created by the City Council to provide a current inventory of historic resources, a list of potential historic resources, and to make policy recommendations to guide historic preservation activities for the City of Anna.

Historic resource. Any building, structure, object, or site that is 50 years or older, or any resource that has been identified as a priority for its significance in history, architecture, engineering, archeology, or culture at the national, state, or local level.

Integrity. The authenticity of a property's historic identity evidenced by survival of physical characteristics that existed during the property's history.

Improvement. Any building, structure, sign, parking facility, fence, gate, wall, work of art or other object constituting a physical betterment of real property, or part of such betterment.

Commented [NG1]: I left this in since this is specifically called out in downtown / comp plans

Commented [NG2]: Add visual guide / pictures where possible.

Maintenance. Any work for which the purpose and effect of which is to correct or protect with least degree of intervention any deterioration or decay of or damage to a structure or property, or any part thereof, and to repair or replace the same, as nearly as may be practicable, to avoid any further deterioration, decay, or damage, using the same materials or those materials available which are as close as practicable to the original and all of which must comply with applicable codes and ordinances. Maintenance does not include a change in design, material, or outward appearance, but does include in-kind repairs or replacements.

Minor in-kind repairs or replacements. Small-scale repairs or replacements to correct minor problems or damage to the exterior of a structure or building, not including a change in design, material, or outward appearance. Examples that satisfy this definition include, but are not limited to touch up painting, spot replacement of shingles, replacement of a windowpane, caulking, and securing loose boards.

Non-contributing structure. A structure within a historic district that is not an integral part of the historic, archaeological and architectural fabric of the district or the city or does not retain a significant portion of its architectural or design integrity.

Preservation. The act or process of applying measures necessary to sustain the existing form, integrity, and materials of an historic property. Work, including preliminary measures to protect and stabilize the property, generally focuses upon the ongoing maintenance and repair of historic materials and features rather than extensive replacement and new construction. New exterior additions are not within the scope of this treatment; however, the limited and sensitive upgrading of mechanical, electrical, and plumbing systems and other code-required work to make properties functional is appropriate within a preservation project.

Reconstruction. The act or process of depicting, by means of new construction, the form, features, and detailing of a non-surviving site, landscape, building, structure, or object for the purpose of replicating its appearance at a specific period of time and in its historic location.

Rehabilitation. The act or process of making possible a compatible use for a property through repair, alterations, and additions while preserving those portions or features that convey its historical, cultural, or architectural values.

Relocation. Any change of the location of a structure, object, or material thing in its present setting to another setting.

Removal. The act or process of permanently removing any building, structure, or object from any site or land, or permanently removing any exterior architectural features, exterior features, or elements from a building, structure, object, site, or land.

Repair. Any change which does not require a building permit, and which is not construction, demolition, removal, or relocation.

Restoration. The act or process of accurately depicting the form, features, and character of a property as it appeared at a particular period of time by means of the removal of features from other periods in its history and reconstruction of missing features from the restoration period. The limited and sensitive upgrading of mechanical, electrical, and plumbing systems and other code-required work to make properties functional is appropriate within a restoration project.

Site. The location of a significant event, a historic occupation or activity, or a structure, where the location itself maintains historical value regardless of the value of any buildings or objects.

Division 2. Historic Preservation Commission

9.06.021. Creation. There is hereby created a commission to be known as the Anna Historic Preservation Commission (AHPC), that shall be organized, appointed, and function as follows:

(a) The Commission shall consist of five (5) members to be appointed, to the extent available among the residents of the community, in the following areas of expertise: architect, planner, representative of a design profession, archeologist, historian, licensed real-estate broker, attorney, owner of a landmark or of a property in a historic district, a member of Anna Area Historic Preservation Society, or an expert from a related discipline. All Commission members shall have a known and demonstrated interest, competence, or knowledge in historic preservation within the City of Anna.

(b) The Commission members shall serve for a term of three (3) years, with the exception that the initial term of three (3) members shall be three (3) years, and the remaining two (2) members shall be two (2) years.

(c) Vacancies shall be filled by City Council for the remainder of the unexpired term.

(d) Members may resign by submitting a letter of intent to the City Council and the Historic Preservation Officer. Any member who misses three consecutive regular meetings shall be considered to have resigned, and a replacement shall be appointed for the vacancy.

9.06.022. Organization.

(a) The Historic Preservation Commission shall meet regularly as needed, a minimum of six (6) times annually.

(b) Special meetings may be called at any time by the Historic Preservation Officer (HPO), or at the request of the Chair and at

least two (2) members of the Anna Historic Preservation Commission.

(c) A quorum shall be a simple majority of the Commission's appointed members for the purpose of conducting business. No action shall be valid unless adopted by the affirmative vote of a majority of commission members present and voting.

(d) Members must attend one preservation-related training per year conducted by the City of Anna. Initial orientation for new members shall be provided by the HPO and should be completed within two months of appointment. The HPO shall keep a record of members' training compliance.

(e) The Historic Preservation Officer shall ensure that minutes of each meeting are recorded, which shall be approved by the Commission and filed with the Texas Historical Commission.

(f) The Chair and Vice Chair of the Commission shall be elected by and from the members of the Commission.

9.06.023. Powers and Duties. The Commission shall have the authority and responsibility to:

(a) Adopt or amend parliamentary rules and procedures to carry out the business of the Commission;

(b) Maintain written minutes of all actions taken by the Commission;

(c) Adopt and periodically review criteria for the designation of historic, architectural, and cultural landmarks and the delineation of historic districts;

(d) Adopt and periodically review historic preservation guidelines for review of all Certificate of Appropriateness applications;

(e) Recommend adoption of and periodic updates to the city's historic resources survey;

(f) Advise and maintain a citywide preservation plan, which should be updated at least every ten (10) years;

(g) Recommend the designation of resources as historic landmarks and the delineation of boundaries for historic districts, including the designation of new districts;

(h) Review and take action on Certificate of Appropriateness applications, including appeals on actions taken by the Historic Preservation Officer via administrative review;

(i) Recommend approval or disapproval of requests for historic preservation incentives;

(j) Monitor and report to the Texas Historical Commission all actions affecting any designated property, as deemed necessary;

(k) Increase public awareness of the value of historic, cultural, and architectural preservation by developing and participating in public education and outreach programs.

Division 3. Historic Preservation Officer

The Director of Development Services, or their designee, shall serve as the historic preservation officer and administer the city's historic preservation program. The historic preservation officer must have a demonstrated background in architecture, history, urban planning, real estate, law, archaeology, or other discipline(s) related to historic preservation.

The Historic Preservation Officer shall be empowered to:

(a) Schedule, post, notice, and facilitate historic preservation commission meetings;

(b) Receive and review all applications pursuant to this article to ensure their completeness;

(c) Approve or disapprove certificates of appropriateness subject to administrative review;

(d) Review applications for certificates of appropriateness and requests for historic preservation incentives, subject to review by the historic preservation commission and/or city council;

(e) Coordinate the city's historic preservation activities with those of local, state, and federal agencies as well as other municipal departments and the general public;

(f) Monitor and report to the Commission all actions affecting any designated property, as deemed necessary;

(g) Develop community outreach programs to support preservation goals;

(h) Prepare, maintain, and update historic resource inventories, as needed; and

(i) Prepare, amend, and update the city's preservation plan.

Division 4. Designation of Historic Landmarks

Property owners of proposed historic landmarks shall be notified prior to the Commission hearing on the recommended designation.

At the Commission's public hearing, owners, interested parties, and technical experts may present testimony or documentary evidence which will become part of a record regarding the historic, architectural, or cultural importance of the proposed historic landmark.

9.06.041. Property Owner-Initiated Designation.

(a) Prior to the submission of applications, a pre-application meeting is required with the Historic Preservation Officer.

(b) Any person or legal entity having a proprietary interest in a property may submit an application to designate the property as a historic landmark.

(c) Applications made on forms as prescribed by the city shall be addressed to the Historic Preservation Officer, who shall review the application and submit it to the Anna Historic Preservation Commission for further review and approval.

(d) Applications for designation of a historic landmark shall require the signatures of all owners of the property, and/or their authorized agents.

9.06.042. City-Initiated Designation.

(a) The Commission may recommend to the City Council that an application be submitted to designate any building, structure, object, site, property, or land within the incorporated limits of the City as a historic landmark.

(b) The City Council may, on its own motion or upon the recommendation received from the Commission, direct the Historic Preservation Officer to initiate designation proceedings. Upon approval of such motion, the Historic Preservation Officer, or their designee(s), shall prepare an application including a request for a zoning map amendment and a zoning text amendment to the Zoning Ordinance on behalf of the City.

(c) A supermajority (3/4) vote of both City Council and the Historical Preservation Commission is needed to designate historic landmarks over a property owner's objections.

9.06.043. Review and Recommendation by the Historical Preservation Commission.

(a) Upon staff's acceptance and determination of a complete application, the Historic Preservation Officer, or their designee(s), shall schedule a public hearing at the next practicable Historic Preservation Commission meeting.

(b) Upon recommendation of the Historic Preservation Commission, the proposed historic landmark shall be submitted to the next regularly scheduled Planning and Zoning Commission meeting. The Planning and Zoning Commission shall give notice follow the publication procedure, hold hearings, and make its determination in the same manner as provided in the general zoning ordinance of the City of Anna.

(c) The City Secretary shall place the hearing on the next practicable City Council agenda, and the applicant shall be notified of the date of the hearing. The City Council, utilizing the criteria set forth under this ordinance's historic standards and guidelines, shall approve or deny the item within forty-five (45) days.

Commented [NG3]: Check that all references for city council hearings follows this format

(d) Upon designation of a building as a historic landmark, the City Council shall cause the designation to be recorded in the Official Public Records of Real Property of Collin County, the tax records of the City of Anna, and the Collin County Appraisal District as well as the official zoning maps of the City of Anna.

Division 5. Designation of Historic Districts

Property owners within a proposed historic district shall be notified prior to the Commission hearing on the recommended designation. At the Commission's public hearing, owners, interested parties, and technical experts may present testimony or documentary evidence which will become part of a record regarding the historic, architectural, or cultural importance of the proposed historic district.

9.06.051. Property Owner-Initiated Designation.

(a) Any person or business entity having a proprietary interest in a property, within the subject area, may submit an application to designate any area as a historic district.

(b) Applications shall be made on a form suitable to the Director of Development Services, or their designee(s).

(c) Sixty (60) Percent Owner Consent:

(1) Applications must contain the signatures of property owners of record or authorized agents, of at least sixty (60) percent of the total number of lots or parcels of land in the proposed district boundaries, as determined by the most recently approved municipal tax roll in which the district is located.

(2) For purposes of calculating the support of sixty (60) percent of the property owners of record, each property as listed

on the tax rolls shall be counted individually, regardless of whether an individual or group owns multiple properties within the proposed area. Additionally, only one (1) property owner of record shall submit written support in order for the Historic Preservation Officer to count the property in the calculation.

9.06.052. City-Initiated Designation.

(a) The Historic Preservation Commission may recommend to the City Council an application be submitted to designate any locally defined area or multiple non-contiguous areas within the incorporated limits of the City as a historic district.

(b) City Council may, on its own motion, upon the recommendation received from the Historic Preservation Commission, direct the Historic Preservation Officer to initiate designation proceedings. Upon approval of such motion, the Historic Preservation Officer, or their designee(s), shall prepare an application including a request for a zoning map amendment and a zoning text amendment to the Zoning Ordinance on behalf of the City of Anna. Property owner signatures are not required.

(1) Upon recommendation of the Historic Preservation Commission, the proposed historic district shall be submitted to the Planning and Zoning Commission within thirty (30) days from the date of submittal of designation request. The Planning and Zoning Commission shall give notice and conduct its hearing on the proposed designation within forty-five (45) days of receipt of such recommendation from the Historic Preservation Commission. The Planning and Zoning Commission shall make its recommendation to the City Council within forty-five (45) days subsequent to the hearing on the proposed designation.

(2) Upon recommendation of the Planning and Zoning Commission, the City Secretary shall place the designation on the next practicable City Council agenda, and the applicant shall be notified of the date of the hearing. The City Council, utilizing the criteria set forth under this ordinance shall deny or approve the item within forty-five (45) days of receipt of the recommendation of the Planning and Zoning Commission.

(3) Upon designation of a historic district, the City Council shall cause the designated boundaries to be recorded in the Official Public Records of real property of Collin County, the tax records of the City of Anna and the Collin County Appraisal District as well as the official zoning maps of the City of Anna.

Division 6. Criteria for Designation of Historic Landmarks and Districts

9.06.061. Purpose. The purpose of designating a historic landmark or district is to bring it to the attention of the general public, officially recognize its unique qualities that add to the character of the City, and assist in protecting it from improper exterior changes or an improper hasty demolition, removal, or relocation.

9.06.062. Criteria for designating historic landmarks. A historic landmark may be designated if it:

(a) Possesses significance in history, architecture, archeology, or culture;

(b) Is associated with events that have made a significant contribution to the broad patterns of local, regional, state, or national history;

(c) Embodies the distinctive characteristics of a style, type, period, or method of construction;

(d) Represents the work of a master designer, builder, or craftsman;

(e) Represents an established and familiar visual feature of the city;

(f) Is at least fifty (50) years old; or

(g) Is identified with a person who significantly contributed to the culture and development of the City of Anna, Collin County, or history more broadly.

9.06.063. Criteria for designating a historic district. A historic district may be designated if it:

(a) Contains two (2) or more properties that meet one or more of the criteria for designation of a historic landmark. These properties will be designated as contributing properties for the creation of the historic district.

Commented [NG4]: Property owner consent for contribting properties?

Division 7. Certificate of Appropriateness for Alteration or New Construction Affecting Landmarks or Historic Districts

9.06.071. Purpose. The purpose of a Certificate of Appropriateness (COA) is to ensure that the integrity and character of Anna's historic resources are maintained, and to help enhance or return lost or diminished examples of architectural significance to their appropriate historical form.

9.06.072. Review Required. A Certificate of Appropriateness shall be required for any project affecting the exterior or structural stability of a building, structure, or object that is a designated historic landmark or is contributing to a historic district, or for new

construction within a historic district.

(a) No person or entity shall carry out any construction, reconstruction, alteration, restoration, rehabilitation, or relocation of any historic resource which affects the exterior appearance of any structure without obtaining a Certificate of Appropriateness issued by the Commission or Historic Preservation Officer, as appropriate, for the following types of work:

(1) Repair, reconstruction, alteration, addition, stabilization, restoration, or rehabilitation;

(2) New construction on real property excluding public rights-of-way;

(3) Material changes in any doors, roofs, windows, masonry work, woodwork, light fixtures, signs, sidewalks, fences, steps, paving, and/or other exterior elements visible from a public right-of-way which affect the appearance and compatibility of the structure or property; or

(4) Demolition, removal, or relocation of a historic resource.

(b) The HPO or Historic Preservation Commission may approve a Certificate of Appropriateness for work that does not strictly comply with the preservation criteria if the work is historically compatible, consistent with the intent of the criteria, and does not adversely affect the historic character of the property or historic district.

(c) Nothing in this ordinance should be construed to prevent maintenance or minor in-kind repair of any exterior architectural feature of a historic landmark or historic resource located in a historic district. Repairs shall be made in accordance with historic standards established by the city.

(d) If a historic resource is unexpectedly damaged and the HPO determines that additional deterioration is likely to occur without immediate repair, the HPO may authorize the property owner to take temporary measures to stabilize and protect the structure. In such cases, the property owner shall apply for a Certificate of Appropriateness within seven (7) days of completion of the emergency corrective measures. The corrective measures authorized under this subsection shall not permanently alter the architectural features of the historic resource.

(e) No building permit shall be issued for proposed work until the appropriate certificate has first been issued by the historic preservation commission in accordance with this section. The Certificate of Appropriateness application shall be in addition to, and not in lieu of, any required building permit that may be required.

9.06.073. Criteria. The historic Preservation Officer may approve building improvements that meet all four (4) criteria below. An application may be referred to the Commission for review at any time by the HPO:

(1) Meets the intent of the historic preservation guidelines;

(2) Meets Zoning Ordinance and/or Building Code requirements;

(3) Does not obstruct, alter, damage, or destroy the building's character-defining features;

(4) The location, size, materials, style, and design are deemed appropriate.

The following table is provided as guidance for the review of Certificates of Appropriateness:

Project Type	Historic Preservation Officer Approval if:	Historic Preservation Commission Approval if:
ADA Accessibility Improvements	• Improvements are located at rear or side/secondary facade.	• Improvements are located at the front/primary facade.
Building Additions	• Building Additions are located at rear or side and are not visible from public right-of-way • Proposal is for a non-contributing structure in a historic district and are deemed appropriate by the HPO	• All other building additions are subject to the Historic Preservation Commission review.
Building Repairs, Restoration, and Maintenance	• Proposal preserves, restores, or repairs character-defining elements and architectural features • In-kind repair or replacements work matching existing size, style, material, profile, color, and finish	• Removal of character-defining elements. • Proposal changes materials from original building.
Doors, Windows, Shutters, Screens	• Replacement of door/window/shutter/screen matching the existing in size, location, material, color, style, and profile. • Installation of new	• Door/window/shutter/screen replacement does not match the existing in size, material, color, location, style, and

	screens. • Installation of new shutters on the rear or side facades. • Exterior storm windows and doors provided: no alteration to the opening is required; they are not attached to and do not cover any exterior trim; they are to be located on existing openings on residential structures c. 1955 or later; and are deemed appropriate by the HPO.	profile. • Improvements are located in the front of the property/building or are visible from the public rights of-way.
Energy Efficiency Improvements (Solar, Wind, etc.)	• Improvements are located in rear or side of the property/building and are not visible from the public rights-of-way.	• Improvements are located in the front of the property/building or are visible from the public rights of-way.
Fences	• Fence material is not louver, basket weave, chain link, masonry stockade, split rail, shadow box, or board and batten in style. • HPO finds the picket spacing, and post, picket top post cap and hardware style, and finish are appropriate.	• All other fence requests are subject to the Historic Preservation Commission.
Hardscape Improvements (Sidewalks, driveways, patios, and paved off-street parking surfaces, etc.)	• Repair or replacement of non-historic sidewalks, driveways and paved off-street parking surfaces with appropriate landscape features such as lawns, shrubs, flower beds, etc. • New hardscape improvements that do not require a building permit, excluding driveways and off-street parking.	• Installation of new driveways and off-street parking and significant hardscape improvements requiring a building permit.
New Construction	• Accessory Buildings not visible from public right-of-way on a historic landmark property	• All other new construction requests are subject to the Historic Preservation Commission.
Roofs and Roof Materials	• Repair or replacement of non-historic roof or roof materials • Repair or replacement of gutters, soffits, roof brackets, exposed rafters, and rafter ends to match existing as necessary and complementary to the structure.	• Repair or replacement of historic roof materials. • Installation of new gutters, soffits, roof brackets, exposed rafters, and rafter ends located on the front/primary facade. • Installation of skylights visible from the public right-of-way
Screening for Trash and Recycling Receptacles	• Placement and design of screening treatments for trash and recycling receptacles on commercial properties is located in the alley or rear yard and does not exceed the height or width of the proposed receptacle by more than 18”.	• Proposal does not meet the HPO approval criteria
Signs (wall, window, temporary, mural)	• Sign meets the historic preservation standards, Zoning Ordinance, Sign Ordinance, and the location is deemed appropriate by the HPO	• Sign proposes changing materials or defining historic elements

Division 8. Certificate of Appropriateness for Demolition, Removal, or Relocation

9.06.081. Purpose. It is the intent of this and succeeding sections to preserve historic and architectural resources of the city through limitations on demolition and removal of historic resources. The demolition or removal of historic landmarks and contributing structures within a historic district diminishes the city's historic character, significance, and authenticity and is discouraged.

9.06.082. Review Required. A permit for the demolition of a historic landmark or property within a historic district, including secondary buildings and landscape features, shall not be granted without review by the Historic Preservation Officer and Historic Preservation Commission.

(a) The Commission shall render a decision to delay, deny, or grant a Certificate of Appropriateness for demolition, removal, or relocation for the following:

  (1) Historic landmarks; and

  (2) Contributing structures located within a historic district.

(b) The HPO shall render a decision to refer to the Commission or grant a Certificate of Appropriateness for demolition, removal, or relocation for non-contributing structures located within a historic district.

9.06.083. Criteria for Demolition or Removal. The Commission shall consider valid reasons for demolition or removal of a historic

resource based on the following criteria:

(a) The resource is a non-contributing structure within a historic district;

(b) The historic resource has lost its architectural significance and/or historic integrity; or

(c) The structure poses a threat to public health or safety upon determination by the building inspector and agreement by the HPO and the Director of Development Services.

9.06.084. Criteria for Relocation. The Commission shall consider valid reasons for relocation of historic resources based on the following criteria:

(a) The historic resource is geographically isolated from any remaining structure or feature of historic, architectural, archeological, or cultural significance and where removing the resource shall not diminish the significance of the resource itself.

(b) All other preservation options have been exhausted.

9.06.085. Criteria for Decision. A decision by the Preservation Commission to approve or deny a Certificate of Appropriateness for demolition, removal, or relocation for one of the above criteria shall be guided by:

(a) The historic, cultural, or architectural significance of the building, structure, site, or object;

(b) The difficulty or impossibility of reproducing such a building, structure, site, or object because of its unique design, features, material, detail, or unique location;

(c) Whether the building, structure, site, or object is one of the last remaining examples of its kind in the neighborhood, district, or the city;

(d) Whether there are definite plans for development of the property if the proposed demolition is carried out, and the potential effect of those plans on the character of the district or surrounding area;

(e) Whether reasonable measures can be taken to save the building, structure, site, or object;

(f) For relocation, whether the property owner has, in good faith, made efforts to relocate the structure in its entirety with a sense of place and time in the following order:

(1) On the same site;

(2) Within a historic district, if applicable;

(3) Within the City of Anna's municipal boundaries;

(4) Within the same county boundaries;

(5) Within adjoining county boundaries; or

(6) Within the State of Texas.

9.06.086. Required documentation. An applicant seeking to demolish, remove, or relocate a structure described above must provide documentation as proof to establish the necessity of a Certificate of Appropriateness. The applicant, private persons, organizations, and city departments may submit relevant evidence in addition to the required documentation. The Commission may also request additional information beyond the required documentation. Documentation requirements are as follows:

(a) Compatible or non-contributing structures in a Historic district. Applicants seeking to demolish, remove, or relocate any compatible or noncontributing structure in a historic district shall provide the following with their application:

(1) Available records depicting the original construction of the existing structure, including drawings, pictures, or written descriptions.

(2) Photographic documentation demonstrating the existing condition of the structure

(b) Structures posing a threat. An application for demolition or removal of a structure that poses a threat to public health or safety shall include the documentation listed below. The owner must establish the necessary facts to prove demolition is necessary to alleviate a threat to public health and safety. The application must include:

(1) Documentation depicting the current condition of the structure, including drawings, photographs, or written descriptions;

(2) Information on the nature, imminence, and severity of the threat; and

(3) A study regarding both the cost of restoration of the structure and the feasibility (including architectural and engineering analyses) of restoration of the structure.

9.06.087. Demolition delay. The Commission shall have the authority to enforce a minimum ninety (90) day stay or suspension of demolition for landmarks, or contributing properties located within a historic district. Within the suspension period, the Commission may request an extension of the suspension period by the City Council.

(a) If the City Council, after notice to the applicant and a public hearing, determines that there are likely to be reasonable grounds for preservation, the City Council may extend the suspension period for an additional period not exceeding one hundred twenty (120) calendar days, for a total of not more than two hundred forty (240) calendar days from the date of the Certificate of Appropriateness application. During the period of suspension of the application, no permit shall be issued for such demolition, relocation, or removal, nor shall any person demolish, remove, or relocate the structure.

(b) During the suspension time of the delay period, the Commission may suggest proposals to preserve the site for purposes consistent with this chapter. The plan may include recommendations for complete or partial tax abatements, tax credits, or authority for alteration or construction not inconsistent with the purposes of this article, and other actions allowable by law. The owner shall work in good faith with the local and state preservation organizations and interested parties a diligent effort to seek an alternative to removal or demolition. If a reasonable agreement cannot be obtained with the applicant, then the permits shall be issued for demolition, removal, or relocation at the end of the delay period.

Division 9. Historic Preservation Guidelines

In considering an application for a certificate of appropriateness, the Commission shall be guided by any adopted historic preservation guidelines and *The Secretary of the Interior's Standards for Rehabilitation of Historic Buildings*. Any adopted guidelines and *Secretary of the Interior's Standards* shall be made available to the property owners of historic landmarks or within historic districts. The Secretary's Standards are summarized below:

(a) Every reasonable effort shall be made to adapt the property in a manner which requires minimal alteration of the building, structure, object, or site and its environment.

(b) The distinguishing original qualities or character of a building, structure, object, or site and its environment shall not be destroyed. The removal or alteration of any historic material or distinctive architectural features should be avoided when possible.

(c) All buildings, structures, objects, and sites shall be recognized as products of their own time. Alterations that have no historical basis and which seek to create an earlier appearance shall be discouraged.

(d) Changes which may have taken place in the course of time are evidence of the history and development of a building, structure, object, or site and its environment. These changes may have acquired significance in their own right, and this significance shall be recognized and respected.

(e) Distinctive stylistic features or examples of skilled craftsmanship which characterize a building, structure, object, or site shall be kept where possible.

(f) Deteriorated architectural features shall be repaired rather than replaced, wherever possible. In the event replacement is necessary, the new material should reflect the material being replaced in composition, design, color, texture, and other visual qualities. Repair or replacement of missing architectural features should be based on accurate duplications of features, substantiated by historical, physical, or pictorial evidence rather than on conjectural designs or the availability of different architectural elements from other buildings or structures.

(g) The surface cleaning of structures shall be undertaken with the gentlest means possible. Sandblasting and other cleaning methods that will damage the historic building materials shall not be undertaken.

(h) Every reasonable effort shall be made to protect and preserve archeological resources affected by, or adjacent to, any project.

(i) Contemporary design for alterations and additions to existing properties shall not be discouraged when such alterations and additions do not destroy significant historical, architectural, or cultural material, and such design is compatible with the size, scale, color, material, and character of the property, neighborhood, or environment.

(j) Whenever possible, new additions or alterations to buildings, structures, objects, or sites shall be done in such a manner that if such additions or alterations were to be removed in the future, the essential form and integrity of the building, structure, object, or site would be unimpaired.

Division 10. Certificate of Appropriateness Application Procedure

9.06.101. Application. Prior to the commencement of any work requiring a certificate of appropriateness (COA) the owner shall file an application for such a certificate with the Historic Preservation Commission. The Commission may also request additional information beyond the required documentation. The application shall include:

(a) Name, address, telephone number, and email of applicant(s), detailed description of proposed work.

(b) Location and photograph of the property and adjacent properties.

(c) Elevation drawings of the proposed changes, if available.

(d) A list and samples of materials to be used, if applicable.

(e) If the proposal includes signs or lettering, a scale drawing showing the type of lettering to be used, all dimensions and colors, a description of materials to be used, method of illumination (if any), and a plan showing the sign's location on the property.

(f) If the proposal includes demolition, removal, or relocation of a structure, any required documentation to establish the necessity of a Certificate of Appropriateness.

9.06.102. Historic Preservation Officer Review. The HPO shall administratively review all applications where the criteria for Commission review are not met then approve, approve with conditions, deny with explanation, or refer any application for further review before the Historic Preservation Commission. The HPO shall provide notice of his or her decision to the applicant within fourteen (14) days from the date the application was received. The HPO shall also notify the Historic Preservation Commission of any approval of a COA at least one day before issuing the Certificate of Appropriateness to the applicant.

9.06.103. Notification. The applicant, or their agent, shall be notified of any pending action and given the opportunity to submit any relevant materials for public record and address the Commission with any relevant counsel, construction, or design professionals.

9.06.104. Commission Hearing. If the criteria for Commission review are met, the HPO shall schedule a hearing at the next regularly scheduled meeting from the date of submission for the applicant to be heard.

9.06.105. Decision. The Commission shall vote to determine whether to approve, deny, delay for further review, or approve with conditions the applicant's request for a COA. The Commission shall issue a ruling within forty-five (45) days of the hearing.

(a) If the HPO/Commission find the proposed work is inconsistent with the Secretary's Standards or the city's adopted historic preservation guidelines and issues a denial, they shall state the reasons for denying the COA and include economically viable recommendations for the applicant to take action upon to secure approval in the future.

(b) A copy of any decision shall be sent to the applicant. Additional copies shall be filed as part of the public record on that property and dispersed to appropriate departments.

(c) If the HPO/Commission has taken no action within ninety (90) days of original receipt by the HPO, the appropriate permit shall be issued.

9.06.106. Appeal.

(a) The applicant may appeal the decision of the HPO to the Historic Preservation Commission by filing a request with the HPO within thirty (30) days of notice of the action taken by the HPO. The HPO shall schedule the appeal hearing for the next regular meeting, which shall follow procedures outlined for the Commission review process.

(b) An applicant may appeal the decision of the Commission to the City Council within (30) days after notification of such action.

(c) Notice of any appeal hearing shall be sent to the property owner and shall set forth in clear and concise fashion the basis for the appeal. The City Secretary shall place the appeal on the next practicable City Council agenda, and the applicant shall be notified of the date of the hearing. The City Council, utilizing the criteria set forth under this ordinance's historic standards and guidelines, shall deny, approve, approve with conditions, or remand the item to the Commission for further proceedings consistent with the City Council's decision.

Commented [NG5]: Check that all references for city council hearings follows this format

9.06.107 Changes in Building or Site Plans Following a Decision. The HPO is delegated authority to work with applicants of approved, non-expired Certificates of Appropriateness to resolve any issues that may arise during permit, plan review, and/or during completion of the approved scope of work. No change shall be made in the application for any building permit after issuance of a Certificate of Appropriateness without approval from the HPO, who shall have the authority to amend the COA for all instances covered under administrative review. The HPO may require any proposed amendments to be reviewed by the Historic Preservation Commission. Any additional projects or major changes in the proposed work shall require the submittal of a new COA application.

9.06.108. Expiration. Every Certificate of Appropriateness issued pursuant to this section shall expire and be void if the authorized

work has not commenced within one (1) year from the date of approval. Failure to complete the work within the required time, including any extension(s), may result in the revocation of the Certificate of Appropriateness. Following expiration or revocation, approval of a new Certificate of Appropriateness application is required to commence construction.

9.06.109. Extensions. Extensions may be granted by the AHPC for any period up to one (1) year. No combination of extensions shall exceed one (1) year from the original expiration date. Requests for extensions shall be submitted in writing to the HPO prior to the date of expiration and should include the following:

(a) The reason for requesting the extension; and

(b) A timetable for starting/restarting and completing work.

9.06.110. Certificate of Appropriateness. It shall be the responsibility of the HPO to issue the actual Certificate of Appropriateness following the approval of the application, with or without any designated conditions, and maintain a copy of the COA, together with the proposed plans. These shall be public documents for all purposes.

9.06.111. Compliance. Work performed pursuant to the issuance of a COA shall conform to the requirements of such certificate. It shall be the duty of the building inspector to inspect, from time to time, any work performed pursuant to a COA to ensure compliance. If such work is not in compliance, the building inspector, in consultation with the HPO, shall issue a stop-work order and/ or citation as prescribed by this ordinance. The HPO/Commission may request that the building inspector inspect the work and take appropriate action.

Division 11. Economic Hardship Application Procedure

9.06.111. Procedure.

(a) After receiving written notification from the Commission of the denial of certificate of appropriateness, an applicant may commence the hardship process. No building permit or demolition permit shall be issued unless the Commission makes a finding that hardship exists.

(b) When a claim of economic hardship is made due to the effect of this ordinance, the owner must prove that:

(1) the property is incapable of earning a reasonable return, regardless of whether that return represents the most profitable return possible;

(2) the property cannot be adapted for any other use, whether by the current owner or by a purchaser, which would result in a reasonable return; and

(3) efforts to find a purchaser interested in acquiring the property and preserving it have failed.

(c) The applicant shall consult in good faith with the Commission, local preservation groups and interested parties in a diligent effort to seek an alternative that will result in preservation of the property. Such efforts must be shown to the Commission.

(d) The HPO shall schedule a hearing on the application at the next regularly scheduled meeting. Following the hearing, the Commission has thirty (30) days in which to prepare a written recommendation to the HPO. In the event that the Commission does not act within ninety (90) days of the receipt of the application, a permit may be granted.

(e) An applicant for a certificate of appropriateness dissatisfied with the action of the Commission relating to the issuance or denial of a certificate of appropriateness shall have the right to appeal to the City Council within thirty (30) days after receipt of notification of such action. The City Council shall give notice, follow publication procedure, hold hearings, and make its decision in the same manner as provided in the general zoning ordinance of the city.

Division 12. Enforcement

9.06.121. Work and inspection. All work performed pursuant to a certificate of appropriateness issued under this ordinance shall conform to any requirements included therein. It shall be the duty of the Historic Preservation Officer to inspect periodically any such work to assure compliance.

9.06.122. Stop-work order.

(a) In the event of any of the following, or upon notification of such fact by the Commission and verification by the Historic Preservation Officer, the Building Inspector shall issue a stop work order and all work shall immediately cease:

(b) Work is not being performed in accordance with a Certificate of Appropriateness; or

(c) No certificate of appropriateness has been approved.

(d) Upon issuance of a stop-work order, the property owner shall be required to amend the existing Certificate of Appropriateness or apply for a new Certificate of Appropriateness and receive approval.

(e) No further work shall be undertaken on the project as long as a stop work is in effect until a decision is rendered by the HPO or Commission.

9.06.123. Other Approvals. All required permits must be issued and plans approved by the building inspections, planning, public works, and health departments before work can commence under an approved Certificate of Appropriateness.

Division 13. Minimum Maintenance Standards

No owner or person with an interest in real property designated as a landmark or included within a historic district shall permit the property to fall into a serious state of disrepair so as to result in the deterioration of any exterior feature which would, in the judgment of the Commission, produce a detrimental effect upon the character of the historic district as a whole or the life and character of the property itself. Owners shall be required to fulfill a minimum level of maintenance on their property in order to keep it from deteriorating. Any of the following are prima facie evidence of a serious state of disrepair:

(a) Deterioration of exterior walls, foundations, or other vertical supports that causes leaning, sagging, splitting, listing, or buckling.

(b) Deterioration of exterior features or exterior architectural features that causes delamination, instability, loss of shape and form, or crumbling.

(c) Ineffective waterproofing of exterior walls, roof, or foundations, including broken windows or doors.

(d) Deterioration that causes a detrimental effect upon the special character of the district as a whole or the unique attributes and character of the structure.

(e) Deterioration of any feature so as to create or permit the creation of any hazardous or unsafe conditions to life, health, or property.

Division 14. Demolition by Neglect

Commented [NG6]: Extenstion for total time?

Failure to provide the minimum maintenance required by this ordinance may result in a finding of demolition by neglect. If conditions of neglect are present or suspected, the HPO and Commission, in coordination with the building inspector, are authorized to lawfully investigate in an effort to prevent further deterioration.

9.06.141. Procedure. Procedure to address demolition by neglect is as follows:

(a) Documentation of neglect. The HPO and building inspector shall inspect the property in question and document evidence of disrepair or neglect.

(b) Notification of owner. The owner shall be notified, providing specific information about the alleged deterioration and requesting that the owner appear before the Commission at the next regularly scheduled meeting.

(c) Hearing. The Commission shall conduct a hearing to enable the commission to make a fuller and more accurate determination of the existence and degree of deterioration and the urgency for corrective action. The owner may appear before the Commission in person or by agent.

(d) Required action upon finding of demolition by neglect. If the Commission determines that the deterioration has produced a detrimental effect on the architectural significance and/or historic integrity of the property or district, the owner shall be cited for demolition by neglect and be given ninety (90) days to begin repairs, up to one (1) year to correct the defects in accordance with the Secretary's Standards.

(e) Appeal. The owner of a property cited for demolition by neglect may appeal the Commission's decision to the Planning and Zoning Commission.

(f) Enforcement. If the owner does not respond to the letter regarding the preliminary determination of demolition by neglect, fails to appear at the citation hearing, or fails to comply with any other provision outlined in this section, the HPO and/or building inspector may refer a demolition by neglect case to the city for enforcement in municipal court.

(g) Assistance. The city may create programs, or enter partnerships with local non-profit organizations, to assist low-income and/or elderly homeowners with maintenance.

9.06.142 Emergency demolition, removal, or relocation. If any historic resource, regardless of classification, is deemed by the building inspector to pose an immediate threat to public health or safety, a Certificate of Appropriateness for total or partial demolition, removal, or relocation may be approved by the HPO at any time.

Division 15. Penalties

Failure to comply with any of the provisions of this ordinance shall be deemed a violation and the violator shall be liable for a

misdemeanor charge, and be subject to a fine of not less than $250 nor more than $500 for each day the violation continues.

Item No. 6.f.

Planning & Zoning Commission Agenda
Staff Report

Meeting Date: 9/9/2026
Staff Contact: Lauren Mecke

AGENDA ITEM:
Conduct a Public Hearing/Consider/Discuss/Action on Amendments to Article 9.04 (Zoning Ordinance) of the City of Anna Code of Ordinances.

SUMMARY:
This item is a recommendation to City Council on an amendment to Article 9.04 (Zoning Ordinance).

Attached is the redline version of the document for consideration. Recommended approval of the item as submitted. This item is tentatively scheduled for the September 22, 2026 City Council meeting.

BACKGROUND:
Amendments to the Zoning Ordinance include:

- Creating new procedures to streamline the development process.
- Adding clarification to uses and parking.
- Reducing parking within Downtown.
- Updating the Accessory Dwelling Unit and Home Occupation Standards.
- Creating a separation standard for alcohol sales (off-premise consumption) from schools, religious facilities, and daycares.
- Requiring larger trees and shrubs at the time of planting.
- Removing the Preliminary Site Plan from the process.

ATTACHMENTS:
1. Anna Zoning Ordinance Edits 2026

City of Anna, Texas

Article 9.04
Zoning Ordinance

9/09/2026 DRAFT

Article 9.04. Zoning Ordinance

08/22/2023-Original Approval

Amendments:

04/08/2025-CBD Ord. 1142-2025-04

09/23/2025-Zoning Ord. 1170-2025-09

Contents

Division 1. General Provisions 1

Sec. 9.04.001. Title 1
Sec. 9.04.002. Purpose 1
Sec. 9.04.003. Authority 1
Sec. 9.04.004. Consistency with Comprehensive Plan 2

Division 2. Zoning Districts 3

Sec. 9.04.005. Generally 3
Sec. 9.04.006. Districts Established 3
Sec. 9.04.007. Zoning Map 5
Sec. 9.04.008. Zoning District Dimensional Standards Graphics 5
Sec. 9.04.009. Agricultural (AG) District 6
Sec. 9.04.010. Single-Family Residential (SF-20.0) District 7
Sec. 9.04.011. Single-Family Residential (SF-14.5) District 8
Sec. 9.04.012. Single-Family Residential (SF-12.0) District 9
Sec. 9.04.013. Single-Family Residential (SF-10.5) District 10
Sec. 9.04.014. Single-Family Residential (SF-8.4) District 11
Sec. 9.04.015. Single-Family Residential (SF-7.2) District 12
Sec. 9.04.016. Single-Family Residential (SF-6.0) District 13
Sec. 9.04.017. Mixed-Density Residential (MD) District 14
Sec. 9.04.018. Multifamily Residential (MF) District 15
Sec. 9.04.019. Local Commercial (C-1) District 17
Sec. 9.04.020. Regional Commercial (C-2) District 18
Sec. 9.04.021. Mixed-Use (MU) District 19
Sec. 9.04.022. Downtown (DT) District 20
Sec. 9.04.023. Light Industrial (I-1) District 22
Sec. 9.04.024. Heavy Industrial (I-2) District 23
Sec. 9.04.025. Thoroughfare Overlay (THOR) District 24
Sec. 9.04.026. Planned Development (PD) District 24

Division 3. Uses 26

Sec. 9.04.027. Generally 26
Sec. 9.04.028. Use Table 27
Sec. 9.04.029. Residential Use-Specific Standards 35
Sec. 9.04.030. Lodging/Group Living Use-Specific Standards 37
Sec. 9.04.031. Automotive Use-Specific Standards 37
Sec. 9.04.032. Commercial Use-Specific Standards 38

Sec. 9.04.033. Recreation Use-Specific Standards....44
Sec. 9.04.034. Public/Institutional Use-Specific Standards....44
Sec. 9.04.035. Industrial Use-Specific Standards....44
Sec. 9.04.036. Caretaking Use-Specific Standards....45
Sec. 9.04.037. Infrastructure Use-Specific Standards....46
Sec. 9.04.038. Accessory Uses and Structures....54
Sec. 9.04.039. Temporary Uses and Structures....61

Division 4. Development Standards....63

Sec. 9.04.040. Purpose....63
Sec. 9.04.041. Dimensional Regulations....63
Sec. 9.04.042. Site Design Requirements....69
Sec. 9.04.043. Parking....77
Sec. 9.04.044. Loading....82
Sec. 9.04.045. Landscaping....84
Sec. 9.04.046. Screening and Fencing....92
Sec. 9.04.047. Outdoor Lighting....100
Sec. 9.04.048. Trash....108
Sec. 9.04.049. Performance Standards....110

Division 5. Procedures....113

Sec. 9.04.050. General Procedures....113
Sec. 9.04.051. Entitlement and Ordinance Procedures....121
Sec. 9.04.052. Site Planning Procedures....127
Sec. 9.04.053. Relief Procedures....137

Division 6. Nonconformities....139

Sec. 9.04.054. Purpose....139
Sec. 9.04.055. General Policy....139
Sec. 9.04.056. Applicability....139
Sec. 9.04.057. Generally....139
Sec. 9.04.058. Nonconforming Use....140
Sec. 9.04.059. Nonconforming Structures....142
Sec. 9.04.060. Nonconforming Lots....142
Sec. 9.04.061. Nonconforming Site Features....143

Division 7. Enforcement....144

Sec. 9.04.062. Generally....144
Sec. 9.04.063. Violations....144
Sec. 9.04.064. Responsible Persons....145

Sec. 9.04.065. Enforcement Responsibility 145
Sec. 9.04.066. Enforcement Procedures 145
Sec. 9.04.067. Cumulative Remedies 147
Sec. 9.04.068. Penalties 147

Division 8. Decision-Making Bodies 148

Sec. 9.04.069. Generally 148
Sec. 9.04.070. Development Services Department 148
Sec. 9.04.071. City Council 148
Sec. 9.04.072. Director 148
Sec. 9.04.073. Planning and Zoning Commission 149
Sec. 9.04.074. Board of Adjustment 149

Division 9. Legal Provisions 152

Sec. 9.04.075. Relationship 152
Sec. 9.04.076. Private Restrictions 152
Sec. 9.04.077. Severability 153
Sec. 9.04.078. Repeal of Existing Ordinances 153
Sec. 9.04.079. Effective Date 153

Division 10. Definitions 154

Sec. 9.04.080. Generally 154
Sec. 9.04.081. Land Use Terms 154
Sec. 9.04.082. Key Terms 176

How to Use this Zoning Ordinance

To help readers use this document, please follow the steps on the next page to answer questions like:

- What can I develop on my property?
- Where can I locate my business?
- What rules and regulations apply to my property?
- What is the development approval process like?

Article 9.04. Zoning Ordinance

Please Note: The left column below is "what to do," and the right column is "where to find it."

Figure 1: Use Guide Graphic

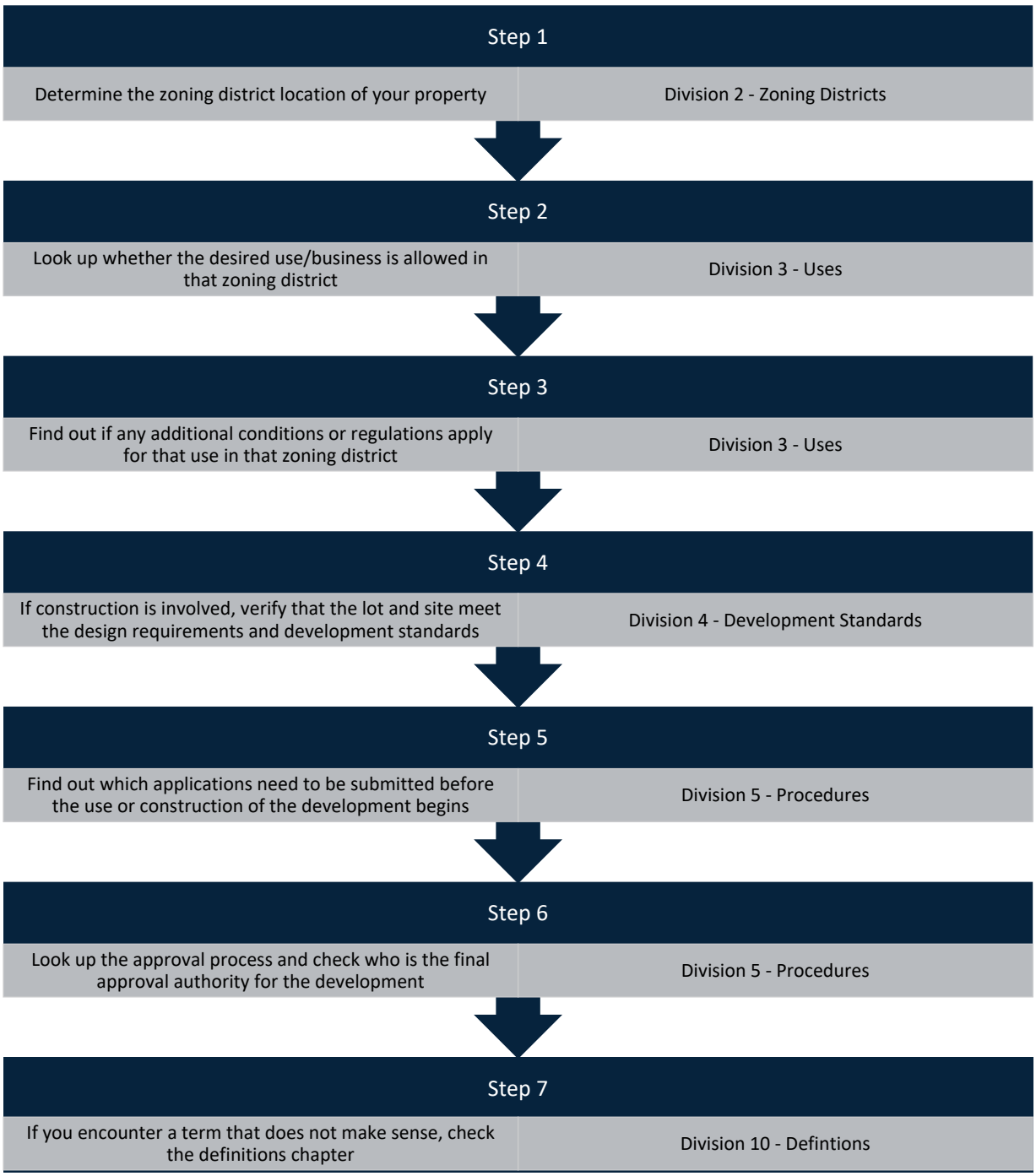

Division 1. General Provisions

Sec. 9.04.001. Title

This Article is referred to as the Anna Zoning Ordinance.

Sec. 9.04.002. Purpose

(a) Generally. This Article implements the purposes established in Texas Local Government Code Sections 211.001 and 211.004:

(1) Implements Anna's Comprehensive Plan;

(2) Implements Anna's Downtown Master Plan;

(3) Implements Anna's Parks Master Plan;

(4) Promotes the public health, safety, morals, or general welfare;

(5) Protects and preserves places and areas of historical, cultural, or architectural importance and significance; and

(6) Provides for efficient and effective processing of zoning and land use applications.

(b) Establishment. In interpreting and applying this Article, this Article establishes the minimum requirements to promote public safety, health, and general welfare.

Sec. 9.04.003. Authority

(a) Texas State Law. The following chapters and sections of the laws of the State of Texas authorize the exercise of authority in this Article:

(1) Texas Local Government Code, including:

(A) Chapter 41 (Municipal Boundaries);

(B) Chapter 42 (Extraterritorial Jurisdiction of Municipalities)

(C) Chapter 43 (Municipal Annexation);

(D) Chapter 54 (Enforcement of Municipal Ordinance);

(E) Chapter 211 (Municipal Zoning Authority);

(F) Chapter 212 (Municipal Regulation of Subdivisions and Property Development);

(G) Chapter 213 (Municipal Comprehensive Plans);

(H) Chapter 214 (Municipal Regulation of Housing and Other Structures);

(I) Chapter 215 (Municipal Regulation of Businesses and Occupations);

(J) Chapter 216 (Regulation of Signs by Municipalities)

(K) Chapter 217 (Municipal Regulation of Nuisances and Disorderly Conduct); and

(L) Chapter 243 (Municipal and County Authority to Regulate Sexually Oriented Business).

(2) Texas Government Code, including Chapters 311 (Code Construction Act) and 312 (Construction of Laws), to the extent applicable to this Article.

(3) Texas Water Code, including the Flood Control and Insurance Act [(Secs. 16.311 through 16.324) (also see 44 C.F.R part 60 (Requirements for Flood Plain Management Regulations)].

(b) Exercise of Powers. This Article is adopted in the exercise of the power granted by municipalities by these statutes and the City Charter of Anna.

(c) Fees Established. City Council shall establish a schedule of fees as required to recoup costs related to the administration of this Article.

Sec. 9.04.004. Consistency with Comprehensive Plan

The City finds that this Article is consistent with its comprehensive plan. The comprehensive plan policies provide guidance in the evaluation of future decisions relevant to City planning.

Division 2. Zoning Districts

Sec. 9.04.005. Generally

The use, erection, construction, reconstruction, relocation, or alteration of any building, structure, or land shall comply with the regulations of this Division for the zoning district in which the building, structure, or land is located.

Sec. 9.04.006. Districts Established

(a) Generally. The City is geographically divided into base, overlay, and special zoning districts. The zoning districts are established according to Table 1: Zoning Equivalency.

(1) Base districts capture the major development categories, including residential and nonresidential uses and development activities. Each base district includes permitted uses and dimensional standards.

(2) Overlay districts establish additional standards within a base district.

(3) Special districts also establish additional standards within a base district, but some standards may be unique to individual developments as determined through the site plan approval process.

(b) Zoning Equivalency. See Table 1: Zoning Equivalency.

Table 1: Zoning Equivalency

Zoning Category	Page Number	Current Zoning District	Previous Zoning District
Agricultural	6	AG Agricultural 43,560 square feet min. lot size	AG Agricultural 43,560 square feet min. lot size
			SF-E Single-Family Residential Estate 43,560 square feet min. lot size
Residential	7	SF-20.0 Single-Family Residential 20,000 square feet min. lot size	SF-20.0 Single-Family Residential 20,000 square feet min. lot size
	8	SF-14.5 Single-Family Residential 14,500 square feet min. lot size	SF-14.5 Single-Family Residential 14,500 square feet min. lot size
	9	SF-12.0 Single-Family Residential 12,000 square feet min. lot size	SF-12.0 Single-Family Residential 12,000 square feet min. lot size
	10	SF-10.5 Single-Family Residential 10,500 square feet min. lot size	SF-10.5 Single-Family Residential 10,500 square feet min. lot size
	11	SF-8.4 Single-Family Residential 8,400 square feet min. lot size	SF-84 Single-Family Residential 8,400 square feet min. lot size
	12	SF-7.2	SF-72

Zoning Category	Page Number	Current Zoning District	Previous Zoning District
		Single-Family Residential 7,200 square feet min. lot size	Single-Family Residential 7,200 square feet min. lot size
			SF-1 Single-Family Residential 7,200 square feet min. lot size
	13	SF-6.0 Single-Family Residential 6,000 square feet min. lot size	SF-60 Single-Family Residential 6,000 square feet min. lot size
			SF-2 Single-Family Residential 6,000 square feet min. lot size
	14	MD Mixed-Density Residential 4,500 square feet min. lot size	SF-Z Single-Family Residential Zero Lot Line 4,500 square feet min. lot size
			SF-TH Single-Family Townhouse 2,700 square feet min. lot size
			TF Two-Family Residential 7,200 square feet min. lot size
			MH-1 Manufactured Home 6,000 square feet min. lot size
			MH-2 Manufactured Home Park 5,000 square feet min. lot size
	16	MF Multifamily Residential	MF-1 Multiple-Family Residential (Medium Density)
			MF-2 Multiple-Family Residential (High Density)
Commercial	18	C-1 Local Commercial	C-1 Restricted Commercial
			NC Neighborhood Business
	19	C-2 Regional Commercial	C-2 General Business
			C-3 Planned Center
			O-1 Office
	20	MU Mixed-Use	CBRD Central Business Redevelopment

Zoning Category	Page Number	Current Zoning District	Previous Zoning District
	21	DT Downtown	
Industrial	23	I-1 Light Industrial	I-1 Light Industrial
	24	I-2 Heavy Industrial	I-2 Heavy Industrial
Special	25	THOR Thoroughfare Overlay	THOR Thoroughfare Overlay
	25	PD Planned Development	PD Planned Development

Sec. 9.04.007. Zoning Map

The zoning districts and their boundaries are adopted and established as shown on the Zoning Map of the City of Anna, Texas. The Zoning Map includes all notations, references, data, district boundaries, and other associated information, and is adopted as part of this Article. The Zoning Map, properly attested, is on file in the office of the City Secretary and displayed as a GIS layer on the City's website. The Zoning Map may be amended as provided in Division 5 of this Article.

Sec. 9.04.008. Zoning District Dimensional Standards Graphics

(a) Dimensional standards (e.g., setbacks, building height) are established within each zoning district and include tables with letters that correspond to the following graphics.

(b) Sec. 9.04.041 establishes the rules for applying dimensional standards in zoning districts. These include height, lot area, density, and yard requirements. All buildings, structures, and lots in the zoning district must comply with the dimensional standards established for that district. Unless otherwise specified, nothing in this Division authorizes encroachment within any easements or plat restrictions.

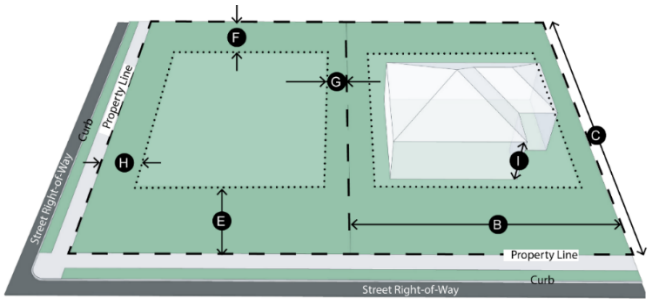

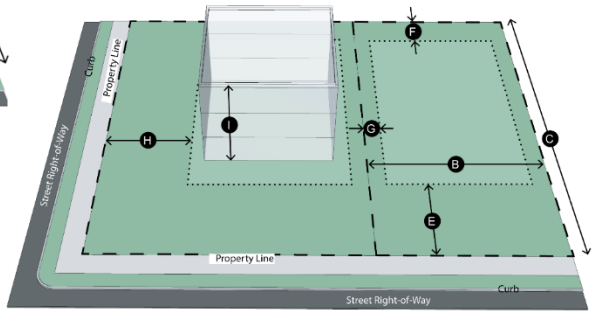

Sec. 9.04.009. Agricultural (AG) District

(a) Purpose. The Agricultural (AG) district provides, preserves, and maintains large tracts of undeveloped land for agricultural pursuits such as crop production and farming, ranching, and raising livestock, wildlife management, and agrarian lifestyle practices. This district protects agricultural areas from the encroachment of urban and suburban development.

(b) Uses. See Table 19: Use Table and all applicable regulations in Division 3.

(c) Dimensional Standards. Development in the Agricultural (AG) district shall follow Table 2: Agricultural (AG) District Dimensional Standards.

Table 2: Agricultural (AG) District Dimensional Standards

Agricultural (AG) District Dimensional Standards		
Lot Requirements		
A	Lot Area (min.)	43,560 square feet
B	Lot Width (min.)	100 feet
C	Lot Depth (min.)	150 feet
D	Lot Coverage (max.)	30%
Setback Requirements		
E	Front Yard (min.)	25 feet
F	Rear Yard (min.)	25 feet
G	Side Yard (min.)	15 feet
H	Corner Side Yard (min.)	25 feet
Building Requirements		
I	Building Height (max.)	35 feet
Additional Applicable Requirements within the Zoning Ordinance		
Sec. 9.04.041 – Dimensional Regulations Sec. 9.04.042 – Site Design Requirements Sec. 9.04.043 – Parking Sec. 9.04.044 – Loading Sec. 9.04.045 – Landscaping		Sec. 9.04.046 – Screening and Fencing Sec. 9.04.047 – Outdoor Lighting Sec. 9.04.048 – Trash Sec. 9.04.049 – Performance Standards

(d) Special Regulations. The Agricultural (AG) district is the district to be assigned to newly annexed properties unless a different district is selected for initial zoning.

Sec. 9.04.010. Single-Family Residential (SF-20.0) District

(a) Purpose. The Single-Family Residential (SF-20.0) district is designed to accommodate a single-family residential development lot design on roughly ½-acre lots. The district can be appropriately located near agricultural and single-family residential uses.

(b) Uses. See Table 19: Use Table and all applicable regulations in Division 3.

(c) Dimensional Standards. Development in the Single-Family Residential (SF-20.0) district shall follow Table 3: Single-Family Residential (SF-20.0) District Dimensional Standards.

Table 3: Single-Family Residential (SF-20.0) District Dimensional Standards

Single-Family Residential (SF-20.0) District Dimensional Standards		
Lot Requirements		
A	Lot Area (min.)	20,000 square feet
B	Lot Width (min.)	100 feet
C	Lot Depth (min.)	150 feet
D	Lot Coverage (max.)	35%
Setback Requirements		
E	Front Yard (min.)	30 feet
F	Rear Yard (min.)	25 feet
G	Side Yard (min.)	10 feet
H	Corner Side Yard (min.)	15 feet
Building Requirements		
I	Building Height (max.)	35 feet
Additional Applicable Requirements within the Zoning Ordinance		
Sec. 9.04.041 – Dimensional Regulations Sec. 9.04.042 – Site Design Requirements Sec. 9.04.043 – Parking Sec. 9.04.044 – Loading Sec. 9.04.045 – Landscaping		Sec. 9.04.046 – Screening and Fencing Sec. 9.04.047 – Outdoor Lighting Sec. 9.04.048 – Trash Sec. 9.04.049 – Performance Standards

(d) Special Regulations.

(1) The Single-Family Residential (SF-20.0) district shall not be within 1,200 feet of a designated Master Thoroughfare Plan highway excluding Powell Parkway (SH 5). This distance shall be measured from the right-of-way centerline to the residential property line.

(2) The corner side yard for “key lots” shall meet the minimum front yard setback requirement.

Sec. 9.04.011. Single-Family Residential (SF-14.5) District

(a) Purpose. The Single-Family Residential (SF-14.5) district is designed to accommodate a single-family residential development design on roughly ⅓-acre lots. The district can be appropriately located near agricultural and single-family residential uses.

(b) Uses. See Table 19: Use Table and all applicable regulations in Division 3.

(c) Dimensional Standards. Development in the Single-Family Residential (SF-14.5) district shall follow Table 4: Single-Family Residential (SF-14.5) District Dimensional Standards.

Table 4: Single-Family Residential (SF-14.5) District Dimensional Standards

Single-Family Residential (SF-14.5) District Dimensional Standards		
Lot Requirements		
A	Lot Area (min.)	14,500 square feet
B	Lot Width (min.)	90 feet
C	Lot Depth (min.)	135 feet
D	Lot Coverage (max.)	35%
Setback Requirements		
E	Front Yard (min.)	30 feet
F	Rear Yard (min.)	25 feet
G	Side Yard (min.)	9 feet
H	Corner Side Yard (min.)	15 feet
Building Requirements		
I	Building Height (max.)	35 feet
Additional Applicable Requirements within the Zoning Ordinance		
Sec. 9.04.041 – Dimensional Regulations Sec. 9.04.042 – Site Design Requirements Sec. 9.04.043 – Parking Sec. 9.04.044 – Loading Sec. 9.04.045 – Landscaping		Sec. 9.04.046 – Screening and Fencing Sec. 9.04.047 – Outdoor Lighting Sec. 9.04.048 – Trash Sec. 9.04.049 – Performance Standards

(d) Special Regulations.

(1) The Single-Family Residential (SF-14.5) district shall not be within 1,200 feet of a designated Master Thoroughfare Plan highway excluding Powell Parkway (SH 5). This distance shall be measured from the right-of-way centerline to the residential property line.

(2) The corner side yard for “key lots” shall meet the minimum front yard setback requirement.

Sec. 9.04.012. Single-Family Residential (SF-12.0) District

(a) Purpose. The Single-Family Residential (SF-12.0) district is designed to accommodate single-family residential development on roughly ¼-acre lots. The district can be appropriately located near agricultural and single-family residential uses.

(b) Uses. See Table 19: Use Table and all applicable regulations in Division 3.

(c) Dimensional Standards. Development in the Single-Family Residential (SF-12.0) district shall follow Table 5: Single-Family Residential (SF-12.0) District Dimensional Standards.

Table 5: Single-Family Residential (SF-12.0) District Dimensional Standards

Single-Family Residential (SF-12.0) District Dimensional Standards		
Lot Requirements		
A	Lot Area (min.)	12,000 square feet
B	Lot Width (min.)	80 feet
C	Lot Depth (min.)	120 feet
D	Lot Coverage (max.)	45%
Setback Requirements		
E	Front Yard (min.)	30 feet
F	Rear Yard (min.)	25 feet
G	Side Yard (min.)	8 feet
H	Corner Side Yard (min.)	15 feet
Building Requirements		
I	Building Height (max.)	35 feet
Additional Applicable Requirements within the Zoning Ordinance		
Sec. 9.04.041 – Dimensional Regulations Sec. 9.04.042 – Site Design Requirements Sec. 9.04.043 – Parking Sec. 9.04.044 – Loading Sec. 9.04.045 – Landscaping		Sec. 9.04.046 – Screening and Fencing Sec. 9.04.047 – Outdoor Lighting Sec. 9.04.048 – Trash Sec. 9.04.049 – Performance Standards

(d) Special Regulations.

(1) The Single-Family Residential (SF-12.0) district shall not be within 1,200 feet of a designated Master Thoroughfare Plan highway excluding Powell Parkway (SH 5). This distance shall be measured from the right-of-way centerline to the residential property line.

(2) The corner side yard for “key lots” shall meet the minimum front yard setback requirement.

Sec. 9.04.013. Single-Family Residential (SF-10.5) District

(a) Purpose. The Single-Family Residential (SF-10.5) district is designed to accommodate single-family residential development on relatively ample lots. The district can be appropriately located near agricultural and single-family residential uses.

(b) Uses. See Table 19: Use Table and all applicable regulations in Division 3.

(c) Dimensional Standards. Development in Single-Family Residential (SF-10.5) district shall follow Table 6: Single-Family Residential (SF-10.5) District Dimensional Standards.

Table 6: Single-Family Residential (SF-10.5) District Dimensional Standards

Single-Family Residential (SF-10.5) District Dimensional Standards		
Lot Requirements		
A	Lot Area (min.)	10,500 square feet
B	Lot Width (min.)	80 feet
C	Lot Depth (min.)	120 feet
D	Lot Coverage (max.)	40%
Setback Requirements		
E	Front Yard (min.)	25 feet
F	Rear Yard (min.)	25 feet
G	Side Yard (min.)	8 feet
H	Corner Side Yard (min.)	15 feet
Building Requirements		
I	Building Height (max.)	35 feet
Additional Applicable Requirements within the Zoning Ordinance		
Sec. 9.04.041 – Dimensional Regulations Sec. 9.04.042 – Site Design Requirements Sec. 9.04.043 – Parking Sec. 9.04.044 – Loading Sec. 9.04.045 – Landscaping		Sec. 9.04.046 – Screening and Fencing Sec. 9.04.047 – Outdoor Lighting Sec. 9.04.048 – Trash Sec. 9.04.049 – Performance Standards

(d) Special Regulations.

(1) The Single-Family Residential (SF-10.5) district shall not be within 1,200 feet of a designated Master Thoroughfare Plan highway excluding Powell Parkway (SH 5). This distance shall be measured from the right-of-way centerline to the residential property line.

(2) The corner side yard for “key lots” shall meet the minimum front yard setback requirement.

Sec. 9.04.014. Single-Family Residential (SF-8.4) District

(a) Purpose. The Single-Family Residential (SF-8.4) district is designed to accommodate single-family residential development on relatively ample lots. The district can be appropriately located near agricultural and single-family residential uses.

(b) Uses. See Table 19: Use Table and all applicable regulations in Division 3.

(c) Dimensional Standards. Development in the Single-Family Residential (SF-8.4) district shall follow Table 7: Single-Family Residential (SF-8.4) District Dimensional Standards.

Table 7: Single-Family Residential (SF-8.4) District Dimensional Standards

Single-Family Residential (SF-8.4) District Dimensional Standards		
Lot Requirements		
A	Lot Area (min.)	8,400 square feet
B	Lot Width (min.)	70 feet
C	Lot Depth (min.)	120 feet
D	Lot Coverage (max.)	50%
Setback Requirements		
E	Front Yard (min.)	20 feet
F	Rear Yard (min.)	20 feet
G	Side Yard (min.)	7 feet
H	Corner Side Yard (min.)	15 feet
Building Requirements		
I	Building Height (max.)	35 feet
Additional Applicable Requirements within the Zoning Ordinance		
Sec. 9.04.041 – Dimensional Regulations Sec. 9.04.042 – Site Design Requirements Sec. 9.04.043 – Parking Sec. 9.04.044 – Loading Sec. 9.04.045 – Landscaping		Sec. 9.04.046 – Screening and Fencing Sec. 9.04.047 – Outdoor Lighting Sec. 9.04.048 – Trash Sec. 9.04.049 – Performance Standards

(d) Special Regulations.

(1) The Single-Family Residential (SF-8.4) district shall not be within 1,200 feet of a designated Master Thoroughfare Plan highway excluding Powell Parkway (SH 5). This distance shall be measured from the right-of-way centerline to the residential property line.

(2) The corner side yard for “key lots” shall meet the minimum front yard setback requirement.

Sec. 9.04.015. Single-Family Residential (SF-7.2) District

(a) Purpose. The Single-Family Residential (SF-7.2) district is designed to accommodate single-family residential development on relatively ample lots. The district can be appropriately located near agricultural and single-family residential uses.

(b) Uses. See Table 19: Use Table and all applicable regulations in Division 3.

(c) Dimensional Standards. Development in the Single-Family Residential (SF-7.2) district shall follow Table 8: Single-Family Residential (SF-7.2) District Dimensional Standards.

Table 8: Single-Family Residential (SF-7.2) District Dimensional Standards

Single-Family Residential (SF-7.2) District Dimensional Standards		
Lot Requirements		
A	Lot Area (min.)	7,200 square feet
B	Lot Width (min.)	60 feet
C	Lot Depth (min.)	120 feet
D	Lot Coverage (max.)	50%
Setback Requirements		
E	Front Yard (min.)	20 feet
F	Rear Yard (min.)	20 feet
G	Side Yard (min.)	5 feet
H	Corner Side Yard (min.)	15 feet
Building Requirements		
I	Building Height (max.)	35 feet
Additional Applicable Requirements within the Zoning Ordinance		
Sec. 9.04.041 – Dimensional Regulations Sec. 9.04.042 – Site Design Requirements Sec. 9.04.043 – Parking Sec. 9.04.044 – Loading Sec. 9.04.045 – Landscaping		Sec. 9.04.046 – Screening and Fencing Sec. 9.04.047 – Outdoor Lighting Sec. 9.04.048 – Trash Sec. 9.04.049 – Performance Standards

(d) Special Regulations.

(1) The Single-Family Residential (SF-7.2) district shall not be within 1,200 feet of a designated Master Thoroughfare Plan highway excluding Powell Parkway (SH 5). This distance shall be measured from the right-of-way centerline to the residential property line.

(2) The corner side yard for “key lots” shall meet the minimum front yard setback requirement.

Sec. 9.04.016. Single-Family Residential (SF-6.0) District

(a) Purpose. The Single-Family Residential (SF-6.0) district is designed to accommodate single-family residential development on relatively smaller lots. The district can be appropriately located near agricultural and single-family residential uses.

(b) Uses. See Table 19: Use Table and all applicable regulations in Division 3.

(c) Dimensional Standards. Development in the Single-Family Residential (SF-6.0) district shall follow Table 9: Single-Family Residential (SF-6.0) District Dimensional Standards.

Table 9: Single-Family Residential (SF-6.0) District Dimensional Standards

Single-Family Residential (SF-6.0) District Dimensional Standards		
Lot Requirements		
A	Lot Area (min.)	6,000 square feet
B	Lot Width (min.)	50 feet
C	Lot Depth (min.)	120 feet
D	Lot Coverage (max.)	50%
Setback Requirements		
E	Front Yard (min.)	20 feet
F	Rear Yard (min.)	20 feet
G	Side Yard (min.)	5 feet
H	Corner Side Yard (min.)	15 feet
Building Requirements		
I	Building Height (max.)	35 feet
Additional Applicable Requirements within the Zoning Ordinance		
Sec. 9.04.041 – Dimensional Regulations Sec. 9.04.042 – Site Design Requirements Sec. 9.04.043 – Parking Sec. 9.04.044 – Loading Sec. 9.04.045 – Landscaping		Sec. 9.04.046 – Screening and Fencing Sec. 9.04.047 – Outdoor Lighting Sec. 9.04.048 – Trash Sec. 9.04.049 – Performance Standards

(d) Special Regulations.

(1) The Single-Family Residential (SF-6.0) district shall not be within 1,200 feet of a designated Master Thoroughfare Plan highway excluding Powell Parkway (SH 5). This distance shall be measured from the right-of-way centerline to the residential property line.

(2) The corner side yard for “key lots” shall meet the minimum front yard setback requirement.

Sec. 9.04.017. Mixed-Density Residential (MD) District

(a) Purpose. The Mixed-Density Residential (MD) district provides medium-density residential development with diversified housing choices. This district encourages a mix of single-family and two-family residential uses and incentivizes community amenities to form compact, accessible, and walkable neighborhoods.

(b) Uses. See Table 19: Use Table and all applicable regulations in Division 3.

(c) Dimensional Standards. Development in the Mixed-Density Residential (MD) district shall follow Table 10: Mixed-Density Residential (MD) District Dimensional Standards.

Table 10: Mixed-Density Residential (MD) District Dimensional Standards

Mixed-Density Residential (MD) District Dimensional Standards		
Lot Requirements		
A	Lot Area (min.)	4,500 square feet
B	Lot Width (min.)	25 feet
C	Lot Depth (min.)	80 feet
D	Lot Coverage (max.)	60%
Setback Requirements		
E	Front Yard (min.)	10 feet
F	Rear Yard (min.)	10 feet
G	Side Yard (min.)	5 feet
H	Corner Side Yard (min.)	10 feet
I	Garage (min.)	20 feet
Building Requirements		
J	Building Height (max.)	35 feet
Additional Applicable Requirements within the Zoning Ordinance		
Sec. 9.04.041 – Dimensional Regulations Sec. 9.04.042 – Site Design Requirements Sec. 9.04.043 – Parking Sec. 9.04.044 – Loading Sec. 9.04.045 – Landscaping		Sec. 9.04.046 – Screening and Fencing Sec. 9.04.047 – Outdoor Lighting Sec. 9.04.048 – Trash Sec. 9.04.049 – Performance Standards

(d) Special Regulations.

(1) Minimum lot areas for attached single-family and two-family dwellings shall be 2,400 square feet per dwelling unit.

(2) Lot widths for a lot containing attached single-family and two-family dwellings shall be no less than 20 feet per ground floor unit plus side yard requirements.

(3) The Mixed-Density Residential (MD) district shall not be within 1,200 feet of a designated Master Thoroughfare Plan highway. This distance shall be measured from the right-of-way centerline to the residential property line.

(4) The corner side yard for “key lots” shall meet the minimum front yard setback requirement.

Sec. 9.04.018. Multifamily Residential (MF) District

(a) Purpose. The Multifamily Residential (MF) district provides for high-density residential development, targeting well-designed multifamily uses serving as a transition between medium-density residential development and commercial nodes. This district encourages multifamily uses with site development characteristics that accommodate open space and access to light and air.

(b) Uses. See Table 19: Use Table and all applicable regulations in Division 3.

(c) Dimensional Standards. Development in the Multifamily Residential (MF) district shall follow Table 11: Multifamily Residential (MF) District Dimensional Standards.

Table 11: Multifamily Residential (MF) District Dimensional Standards

Multifamily Residential (MF) District Dimensional Standards		
Lot Requirements		
A	Lot Area (min.)	5,000 square feet
B	Lot Width (min.)	50 feet
C	Lot Depth (min.)	120 feet
D	Lot Coverage (max.)	50%
Setback Requirements		
E	Front Yard (min.)	25 feet
F	Rear Yard (min.)	20 feet
G	Side Yard (min.)	10 feet
H	Corner Side Yard (min.)	25 feet
Building Requirements		
I	Building Height (max.)	70 feet
Additional Applicable Requirements within the Zoning Ordinance		
Sec. 9.04.041 – Dimensional Regulations Sec. 9.04.042 – Site Design Requirements Sec. 9.04.043 – Parking Sec. 9.04.044 – Loading Sec. 9.04.045 – Landscaping		Sec. 9.04.046 – Screening and Fencing Sec. 9.04.047 – Outdoor Lighting Sec. 9.04.048 – Trash Sec. 9.04.049 – Performance Standards

(d) Special Regulations.

(1) Minimum lot areas for attached single-family and two-family dwellings shall be 2,400 square feet per dwelling unit.

(2) Lot widths for a lot containing attached single-family and two-family dwellings shall be no less than 20 feet per ground floor unit plus side yard requirements.

(3) No lot containing multifamily dwelling units shall contain less than 10,000 square feet.

(4) No lot containing a Single-Unit or Duplex Unit Park shall contain less than 20,000 square feet.

(5) No building in a Single-Unit or Duplex Unit Park, attached single-family dwelling, two-family dwelling, or Townhome Unit shall exceed a height of 35 feet.

(6) Any building with multiple stories and greater than 35 feet tall shall comply with the regulations specified in Sec. 9.04.041(h).

(7) When a multifamily dwelling exceeds one story in height, an automatic sprinkler system shall be installed in accordance with existing fire codes and each building shall have two points of entry or exit.

(8) The maximum density for a multifamily dwelling is 25 units per acre.

(9) The maximum density for a Townhome Unit or Single-Unit or Duplex Unit Park is 12 units per acre.

(10) The corner side yard for “key lots” shall meet the minimum front yard setback requirement.

Sec. 9.04.019. Local Commercial (C-1) District

(a) Purpose. The Local Commercial (C-1) district provides for a range of commercial activities, including the development of small-scale neighborhood offices, low-intensity retail and service businesses, public spaces, and limited, locally-scaled mixed-use establishments. This district offers a transition between neighborhoods and intensive commercial areas, providing a critical commercial function that serves nearby residential areas. Development in this district is primarily pedestrian-scaled to help improve vehicular circulation and safely accommodate residents and pedestrians.

(b) Uses. See Table 19: Use Table and all applicable regulations in Division 3.

(c) Dimensional Standards. Development in the Local Commercial (C-1) district shall follow Table 12: Local Commercial (C-1) District Dimensional Standards.

Table 12: Local Commercial (C-1) District Dimensional Standards

Local Commercial (C-1) District Dimensional Standards		
Lot Requirements		
A	Lot Area (min.)	7,000 square feet
B	Lot Width (min.)	50 feet
C	Lot Depth (min.)	100 feet
D	Lot Coverage (max.)	50%
Setback Requirements		
E	Front Yard (min.)	25 feet
F	Rear Yard (min.)	10 feet
G	Side Yard (min.)	5 feet
H	Corner Side Yard (min.)	25 feet
Building Requirements		
I	Building Height (max.)	25 feet
J	Building Size (max.)	15,000 square feet
Additional Applicable Requirements within the Zoning Ordinance		
Sec. 9.04.041 – Dimensional Regulations Sec. 9.04.042 – Site Design Requirements Sec. 9.04.043 – Parking Sec. 9.04.044 – Loading Sec. 9.04.045 – Landscaping		Sec. 9.04.046 – Screening and Fencing Sec. 9.04.047 – Outdoor Lighting Sec. 9.04.048 – Trash Sec. 9.04.049 – Performance Standards

Sec. 9.04.020. Regional Commercial (C-2) District

(a) Purpose. The Regional Commercial (C-2) district provides for medium- to large-scale development of retail, service, entertainment, and office necessary for a regional market. This district primarily facilitates commercial development, like big box and anchor retailers and intensive shopping strip centers that are automobile-oriented and generate high traffic counts.

(b) Uses. See Table 19: Use Table and all applicable regulations in Division 3.

(c) Dimensional Standards. Development in the Regional Commercial (C-2) district shall follow Table 13: Regional Commercial (C-2) District Dimensional Standards.

Table 13: Regional Commercial (C-2) District Dimensional Standards

Regional Commercial (C-2) District Dimensional Standards		
Lot Requirements		
A	Lot Area (min.)	10,000 square feet
B	Lot Width (min.)	60 feet
C	Lot Depth (min.)	N/A
D	Lot Coverage (max.)	70%
Setback Requirements		
E	Front Yard (min.)	25 feet
F	Rear Yard (min.)	10 feet
G	Side Yard (min.)	5 feet
H	Corner Side Yard (min.)	25 feet
Building Requirements		
I	Building Height (max.)	70 feet
Additional Applicable Requirements within the Zoning Ordinance		
Sec. 9.04.041 – Dimensional Regulations Sec. 9.04.042 – Site Design Requirements Sec. 9.04.043 – Parking Sec. 9.04.044 – Loading Sec. 9.04.045 – Landscaping		Sec. 9.04.046 – Screening and Fencing Sec. 9.04.047 – Outdoor Lighting Sec. 9.04.048 – Trash Sec. 9.04.049 – Performance Standards

(d) Special Regulations. Any building with multiple stories and greater than 35 feet tall shall comply with the regulations specified in Sec. 9.04.041(h).

Sec. 9.04.021. Mixed-Use (MU) District

(a) Purpose. The Mixed-Use (MU) district provides for development outside of Anna's downtown that has identifiable centers and edges, a walkable development pattern, accessible community open spaces, and various commercial tenants. This district provides entertainment venues, commercial, residential, and office uses that harmoniously coexist in a higher-density, pedestrian-oriented environment.

(b) Uses. See Table 19: Use Table and all applicable regulations in Division 3.

(c) Dimensional Standards. Development in the Mixed-Use (MU) district shall follow Table 14: Mixed-Use (MU) District Dimensional Standards.

Table 14: Mixed-Use (MU) District Dimensional Standards

Mixed-Use (MU) District Dimensional Standards		
Lot Requirements		
A	Lot Area (min.)	N/A
B	Lot Width (min.)	25 feet
C	Lot Depth (min.)	N/A
D	Lot Coverage (min.)	35%
Build-to-Zone (BTZ) and Setback Requirements		
E	Front Yard BTZ	0 – 20 feet
F	Rear Yard Setback (min.)	5 feet
G	Side Yard Setback (min.)	5 feet
H	Corner Side Yard Setback (min.)	10 feet
Building Requirements		
I	Frontage Buildout (min.)	50%
J	Building Height (max.)	70 feet
Additional Applicable Requirements within the Zoning Ordinance		
Sec. 9.04.041 – Dimensional Regulations Sec. 9.04.042 – Site Design Requirements Sec. 9.04.043 – Parking Sec. 9.04.044 – Loading Sec. 9.04.045 – Landscaping		Sec. 9.04.046 – Screening and Fencing Sec. 9.04.047 – Outdoor Lighting Sec. 9.04.048 – Trash Sec. 9.04.049 – Performance Standards

(d) Special Regulations.

(1) Any building with multiple stories and greater than 35 feet tall shall comply with the regulations specified in Sec. 9.04.041(h).

(2) Minimum lot area for residential uses within this district shall comply with Sec. 9.04.018 Multifamily Residential (MF).

~~(d)~~

Sec. 9.04.022. Downtown (DT) District

(a) Purpose. The purposes of the Downtown (DT) district are to:

(1) Implement the Anna 2050 Downtown Master Plan adopted by City Council;

(2) Facilitate pedestrian-oriented, mixed-use, urban infill redevelopment, providing shopping, employment, housing, and business and personal services;

(3) Promote an efficient, compact, and walkable development pattern;

(4) Encourage pedestrian activity while reducing reliance on automobiles;

(5) Allow developers flexibility in land use and site design;

(6) Create an attractive and functional downtown as envisioned in the Anna 2050 Downtown Master Plan;

(7) Revitalize the historic downtown area while preserving Anna's history and heritage;

(8) Enhance the significance of the City's authentic core to residents, tourists, and visitors and serve as a support and stimulus to business and industry; and

(b) Applicability. The Downtown (DT) district is geographically divided into two zones. These zones are established in the Anna 2050 Downtown Master Plan and Table 15: Downtown (DT) District Dimensional Standards. All development shall comply with the regulations stated in this Section unless specified otherwise.

(c) Uses. See Table 19: Use Table and all applicable regulations in Division 3.

(d) Dimensional Standards. Development in the Downtown (DT) district shall follow the standards in Table 15: Downtown (DT) District Dimensional Standards.

Table 15: Downtown (DT) District Dimensional Standards

Downtown (DT) District Dimensional Standards			
		Zone	
		Core (CE)	Neighborhood (ND)
Build-to-Zone (BTZ) and Setback Requirements			
A	Front Yard BTZ (min. – max.)		
A.1	*Downtown Arterial Street*	0 – 25 feet	5 – 35 feet
A.2	*Downtown Type A Street*	0 – 15 feet	5 – 20 feet
A.3	*Downtown Type B Street*		
A.4	*Other Street*	5 – 25 feet	5 – 35 feet
B	Rear Yard Setback (min.)	N/A	5 feet
C	Side Yard Setback (min.)	N/A	5 feet
D	Corner Side Yard Setback (min.)	5 feet	5 feet
Building Requirements			
E	Frontage Buildout (min.)		
E.1	*Downtown Arterial Street*	50%	45%
E.2	*Downtown Type A Street*	60%	45%
E.3	*Downtown Type B Street*	40%	30%
E.4	*Other Street*	20%	10%
F	Building Height (max.)	42 feet	42 feet
AG	Encroachments		
G.1	*Downtown Arterial Street*	50% of the depth of the sidewalk or 8' (whichever is less)	35% of the depth of the sidewalk or 6' (whichever is less)
G.2	*Downtown Type A Street*	50% of the depth of the sidewalk or 6' (whichever is less)	25% of the depth of the sidewalk or 6' (whichever is less)
G.3	*Downtown Type B Street*		
G.4	*Other Street*	N/A	N/A
Additional Applicable Requirements within the Zoning Ordinance			
Sec. 9.04.041 – Dimensional Regulations Sec. 9.04.042 – Site Design Requirements Sec. 9.04.043 – Parking Sec. 9.04.044 – Loading Sec. 9.04.045 – Landscaping		Sec. 9.04.046 – Screening and Fencing Sec. 9.04.047 – Outdoor Lighting Sec. 9.04.048 – Trash Sec. 9.04.049 – Performance Standards	

(e) Special Regulations.

(1) Canopies, awnings, galleries, and balconies may encroach over the BTZ and setback areas per the standards if the vertical clearance is a minimum of 8 feet from the finished sidewalk elevation.

(2) No encroachment shall be located over on-street parking, a street, or over a side or rear property line.

(3) Any proposed development over 42 feet in height shall require a specific use permit.

Sec. 9.04.023. Light Industrial (I-1) District

(a) Purpose. The Light Industrial (I-1) district provides for manufacturing, jobbing commercial uses, wholesale businesses, material fabrication, research facilities, and general industrial uses that are clean, quiet, and free of hazardous or objectionable elements such as noise, odor, dust, smoke, or glare. This district provides a transition between heavy industrial uses and other less intensive commercial activity and residential uses.

(b) Uses. See Table 19: Use Table and all applicable regulations in Division 3.

(c) Dimensional Standards. Development in the Light Industrial (I-1) district shall follow Table 16: Light Industrial (I-1) District Dimensional Standards.

Table 16: Light Industrial (I-1) District Dimensional Standards

Light Industrial (I-1) District Dimensional Standards		
Lot Requirements		
A	Lot Area (min.)	10,000 square feet
B	Lot Width (min.)	50 feet
C	Lot Depth (min.)	N/A
D	Lot Coverage (max.)	50%
Setback Requirements		
E	Front Yard (min.)	25 feet
F	Rear Yard (min.)	N/A
G	Side Yard (min.)	N/A
H	Corner Side Yard (min.)	25 feet
Building Requirements		
I	Building Height (max.)[(1)]	42 feet
Additional Applicable Requirements within the Zoning Ordinance		
Sec. 9.04.041 – Dimensional Regulations Sec. 9.04.042 – Site Design Requirements Sec. 9.04.043 – Parking Sec. 9.04.044 – Loading Sec. 9.04.045 – Landscaping		Sec. 9.04.046 – Screening and Fencing Sec. 9.04.047 – Outdoor Lighting Sec. 9.04.048 – Trash Sec. 9.04.049 – Performance Standards
[(1)] Any proposed development more than 42 feet in height shall require a specific use permit.		

Sec. 9.04.024. Heavy Industrial (I-2) District

(a) Purpose. The Heavy Industrial (I-2) district provides areas for manufacturing, processing, assembling, storing, testing, and industrial uses that are extensive and intensive in character, and require large sites, open storage and service areas, extensive services and facilities, and access to major transportation networks. Development in this district is sometimes incompatible with less intensive uses by reason of traffic, noise, vibration, dust, glare, or emissions, and is intrusive to commercial activity and residential areas.

(b) Uses. See Table 19: Use Table and all applicable regulations in Division 3.

(c) Dimensional Standards. Development in the Heavy Industrial (I-2) district shall follow Table 17: Heavy Industrial (I-2) District Dimensional Standards.

Table 17: Heavy Industrial (I-2) District Dimensional Standards

Heavy Industrial (I-2) District Dimensional Standards		
Lot Requirements		
A	Lot Area (min.)	10,000 square feet
B	Lot Width (min.)	50 feet
C	Lot Depth (min.)	N/A
D	Lot Coverage (max.)	50%
Setback Requirements		
E	Front Yard (min.)	25 feet
F	Rear Yard (min.)	N/A
G	Side Yard (min.)	N/A
H	Corner Side Yard (min.)	25 feet
Building Requirements		
I	Building Height (max.)[(1)]	42 feet
Additional Applicable Requirements within the Zoning Ordinance		
Sec. 9.04.041 – Dimensional Regulations Sec. 9.04.042 – Site Design Requirements Sec. 9.04.043 – Parking Sec. 9.04.044 – Loading Sec. 9.04.045 – Landscaping		Sec. 9.04.046 – Screening and Fencing Sec. 9.04.047 – Outdoor Lighting Sec. 9.04.048 – Trash Sec. 9.04.049 – Performance Standards
[(1)] Any proposed development more than 42 feet in height shall require a specific use permit.		

Sec. 9.04.025. Thoroughfare Overlay (THOR) District

(a) Purpose. The Thoroughfare Overlay (THOR) district accommodates well-designed development along the City's major corridors by allowing design flexibility to enhance the development aesthetic.

(b) Applicability. The regulation of this overlay district shall apply to new development and redevelopment located within the greater of a geographic buffer extending outward 500 feet perpendicularly from the right-of-way, or to the back of abutting adjacent lots, for those portions of the following scheduled thoroughfares located within the City limits:

(1) U.S. Highway 75;

(2) White Street (FM 455);

(3) Powell Parkway (SH 5);

(4) Sam Rayburn Memorial Highway (SH 121); and

(5) Collin County Outer Loop.

(c) Dimensional Standards.

(1) Building lots along a highway, as designated by the Master Thoroughfare Plan, shall be a minimum of one acre.

(2) The nonresidential minimum lot width is 100 feet.

(3) The nonresidential minimum front yard setback is 50 feet.

(d) Exception. The Downtown (DT) District shall be exempt from the Thoroughfare Overlay (THOR) District.

Sec. 9.04.026. Planned Development (PD) District

(a) Purpose. The Planned Development (PD) district is intended to provide for combining and mixing of uses allowed in various districts with appropriate regulations and to permit flexibility in the use and design of land and buildings in situations where modification of specific provisions of this Article is not contrary to its intent and purpose or significantly inconsistent with the planning on which it is based and will not be harmful to the community. A Planned Development (PD) district may be used to permit new and innovative concepts in land utilization. While great flexibility is given to provide special restrictions that will allow development not otherwise permitted, procedures are established to prevent misuse of the increased flexibility.

(b) Uses. Any use specified in a Planned Development (PD) district shall be permitted in that district. The size, location, appearance, and method of operation may be specified to the extent necessary to ensure compliance with the purposes of this Article.

(c) Dimensional Standards. A Planned Development (PD) district requires a minimum of 5 contiguous acres.

(d) Special Regulations.

(1) Development standards for each separate Planned Development (PD) district shall be established in the ordinance granting the Planned Development (PD) district and may include but shall not be limited to uses, density, lot area, lot width, lot depth, yard depths and widths, building height, building elevations, coverage, floor area ratio, parking, access, screening, landscaping, accessory

buildings, signs, lighting, management associations, and other requirements as the City Council may deem appropriate.

(2) In the Planned Development (PD) district, the particular district(s) to which uses specified in the Planned Development (PD) district are most similar shall be stated in the granting ordinance. All Planned Development (PD) district applications shall list all requested variances from the standard requirements established throughout this Zoning Ordinance. The applicant shall include justification associated with each requested variance. Applications without this list will be considered incomplete.

(3) The ordinance granting a Planned Development (PD) district shall include a purpose and intent statement, a list is required of variances in each district, and a general statement citing the reason for the Planned Development (PD) district request.

(4) The Planned Development (PD) district shall conform to all other sections of the ordinance and this Article unless specifically exempted in the granting ordinance.

(5) All development within a Planned Development (PD) district shall meet the site planning procedures in Sec. 9.04.052.

Division 3. Uses

Sec. 9.04.027. Generally

(a) Purpose. Table 19: Use Table below lists the uses allowed within all zoning districts. All uses are defined in Sec. 9.04.082. Approval of a use listed in this Article, and compliance with the applicable use-specific standards for that use, authorizes that use only. Development or use of a property for any other use not specifically allowed in Division 3 and approved under the appropriate process is prohibited.

(b) Organization. The uses permitted in each of the zoning districts established in Table 19: Use Table are defined as follows:

(1) Table Symbology. Table 19: Use Table is arranged according to the following symbols established in Table 18: Use Table Symbology.

Table 18: Use Table Symbology

Symbol	Meaning	Description
P	Permitted by Right	A "**P**" in a zoning district column indicates that a use is permitted by right, provided that it meets any applicable use-specific standards. These uses are subject to all other applicable regulations of this Article.
S	Specific Use Permit Required	An "**S**" in a zoning district column indicates that a use requires specific use review and approval by City Council.
	Not Allowed	A blank cell in a zoning district column indicates that a use is not permitted as a primary use or specific use in the zoning district.
--	Not Required	A "--" in a zoning district column indicates that a minimum parking ratio is not required for a particular use.

(2) Standards Column. The "Standards" column provides a reference to associated standards for certain uses Permitted by Right and for Specific Uses. Where a blank space is in the column, there is no associated standard. Where there is information in the column, there are associated standards.

(3) Unlisted Uses. If a proposed use is not specifically listed in Table 19: Use Table, the Director shall determine whether the use is permitted or not permitted. This determination shall be based upon the similarity in nature and character to one or more uses that are listed in Table 19: Use Table.

(A) In making this determination, the Director may consider whether the use has similar visual, traffic, environmental, parking, employment, and other impacts as an expressly listed use.

(B) In making this determination, the Director may also refer to empirical studies or generally accepted planning or engineering sources (e.g., American Planning Association's publication, "A Planner's Dictionary").

(C) Unauthorized if Prohibited.

(i) If the Director determines that a proposed use does not fit within a given use type and is not functionally the same as a permitted, accessory, specific, or temporary use, then the use is a prohibited use.

(ii) The Director's determination may be appealed pursuant to Sec. 9.04.050(m).

Sec. 9.04.028. Use Table

(a) Applicability. This Division shall follow the requirements established in Table 19: Use Table.

(b) Use-Specific Standards. Use-specific standards are established in Sec. 9.04.029, Sec. 9.04.030, Sec. 9.04.031, Sec. 9.04.032, Sec. 9.04.033, Sec. 9.04.034, Sec. 9.04.035, and Sec. 9.04.036.

(c) Accessory Uses and Structures. Accessory Uses and Structures standards are established in Sec. 9.04.038.

(d) Temporary Uses and Structures. Temporary Uses and Structures standards are established in Sec. 9.04.039.

Table 19: Use Table

Land Use	AG	SF-20.0	SF-14.5	SF-12.0	SF-10.5	SF-8.4	SF-7.2	SF-6.0	MD	MF	C-1	C-2	MU	DT		I-1	I-2	Use-Specific Standards	Parking Standards
														CE	ND				
Residential Uses																			
Industrialized Home (Modular Home)	P				P	P	P	P	P									Sec. 9.04.029(a)	2/DU
Live-Work Unit										P			P	P	P			Sec. 9.04.029(b)	1/DU
Manufactured Home	P																		2/DU
Mobile Home	P																		2/DU
Multifamily Dwelling										P			P		S			Sec. 9.04.029(c)	1/1 BRU; 2/2 & 3 BRU + 0.25/Unit for visitors (50% of required parking is covered, not including visitor parking)
Single-Family Dwelling, Attached									P	P			P		P				2/DU
Single-Family Dwelling, Detached	P	P	P	P	P	P	P	P	P						P				2/DU. A Minimum of two spaces shall be covered
Single-Unit or Duplex Unit Park										S			S					Sec. 9.04.029(d)	2/DU
Townhome Unit										P			S					Sec. 9.04.029(d)	2/DU
Two-Family Dwelling									P	P			P		P				2/DU
Lodging / Group Living Uses																			
Bed and Breakfast Facility	S	S	S	S							P	P		P	P			Sec. 9.04.030(a)	1 + ~~(~~0.75~~/)~~ bedrooms
Boarding/Rooming House										P	P			P				Sec. 9.04.030(b)	1 + ~~(~~0.75~~/)~~ bedrooms
Dormitory										P									1 + ~~(~~0.75~~/)~~ bedrooms
Hotel / Motel											S	S	P	S					1.25/guestroom + 1/200 sf of restaurant, retail, conference, or office area
Recreational Vehicle Park	S															P			4/acre
Automotive Uses																			
Auto Dealership												S				S		Sec. 9.04.031(a)	4/1,000 sf
Auto Dealership, Used												S				S		Sec. 9.04.031(b)	4/1,000 sf
Auto Parts Sales											S	P				P			3/1,000 sf
Auto Repair, Heavy																P	P	Sec. 9.04.031(c)	2/1,000 sf
Auto Repair, Light											S	S				P	P	Sec. 9.04.031(d)	2/1,000 sf

Land Use	AG	SF-20.0	SF-14.5	SF-12.0	SF-10.5	SF-8.4	SF-7.2	SF-6.0	MD	MF	C-1	C-2	MU	DT		I-1	I-2	Use-Specific Standards	Parking Standards
														CE	ND				
Auto Storage																P	P		1/1,000 sf
Car Wash											P	P				P		Sec. 9.04.031(e)	2/1,000 sf
Truck Sales																P	P		2.5/1,000 sf
Truck Stop and Repair																	P		2/1,000 sf
Commercial Uses																			
Adult Entertainment Establishment																S	S	Sec. 9.04.032(a)	8/1,000 sf
Artist Studio											P	P	P	P	P				2/1,000 sf
Bar (75% sales from alcohol)											S	S	P	P	S			Sec. 9.04.032(b)	5/1,000 sf
Brewpub/Wine Bar											P	P	P	P	S	P		Sec. 9.04.032(c)	4/1,000 sf
Building, Materials, and Landscaping Store												P				P			3/1,000 sf
Cannabidiol (CBD) Shop											S	S						Sec. 9.04.032	2.5/1,000 sf
Cigar Lounge											S	S	S	S				Sec. 9.04.032	4.0/1,000 sf
Cigar and Smoke Shops											S	S						Sec. 9.04.032	2.5/1,000 sf
Commercial Amusement, Indoor											S	P	P	S					5/1,000 sf
Commercial Amusement, Outdoor											S	P	S			P		Sec. 9.04.032(d)	35/acre
Convenience Store											P	P	P	P	P				4/1,000 sf
Convenience Store, Fuel Pumps											P	P	S	S		P		Sec. 9.04.032(e)	4/1,000 sf
Feed and Farm Supply	S											S				P			2.5/1,000 sf
Financial Institution											P	P	P	P	P				2.5/1,000 sf
Food Preparation and Sales											P	P	P	P	P				3/1,000 sf
Food Truck Park												S	S	S		S		Sec. 9.04.032(f)	2/Food Truck
Greenhouse or Nursery	P											P				P			8/acre
Grocery Store											P	P	P	P	S			Sec. 9.04.032(g)	4/1,000 sf
Heavy Equipment Sales and Rental																P	P		2/1,000 sf
Kennel											P	P			P	P		Sec. 9.04.032(h)	2.5/1,000 sf

Land Use	AG	SF-20.0	SF-14.5	SF-12.0	SF-10.5	SF-8.4	SF-7.2	SF-6.0	MD	MF	C-1	C-2	MU	DT		I-1	I-2	Use-Specific Standards	Parking Standards
														CE	ND				
~~Mixed-Use Development~~Mixed-Use Development													P	P				Sec. 9.04.032(i)	2.5/1,000 sf
Office											P	P	P	P	P	P	P	Sec. 9.04.032(j)	3/1,000 sf
Pawn Shop / Pay Day Loans												P				P		Sec. 9.04.032(k)	4/1,000 sf
Personal Services											P	P	P	P	P				3/1,000 sf
Portable Building Sales																S	P		1/1,000 sf
Postal Services											P	P		P	P	P			2.5/1,000 sf
Private Club												S	S	~~S~~P				Sec. 9.04.032(l)	6/1,000 sf
Restaurant											P	P	P	P	P			Sec. 9.04.032(m)	Buildings ≤ 2,500 sf: 5/1,000 sf Buildings > 2,500 sf: 10/1,000 sf
Retail Store											P	P	P	P	P			Sec. 9.04.032(n)	4/1,000 sf
Radio/Television Studio												P							2/1,000 sf
Shopping Center											P	P	P						2.5/1,000 sf
Tasting Room											P	P	P	P		P			4/1,000 sf
Taxidermist												P				P			1.5/1,000 sf
Theater												P	P						5/1,000 sf
Veterinarian Facility											P	P				P		Sec. 9.04.032(o)	2.5/1,000 sf
Recreation Uses																			
Amphitheater												S	S			P			20/acre
Athletic Field, Public	P	P	P	P	P	P	P	P	P	P									25/acre
Athletic Field, Private	S										S	S				P			25/acre
Community Center, Public		P	P	P	P	P	P	P	P	P			P	P	P				3/1,000 sf
Community Center, Private		P	P	P	P	P	P	P	P	P									2.5/1,000 sf
Country Club	P															P			2.5/hole + 1.5/1,000 sf
Golf Course	P															P		Sec. 9.04.033(a)	2/hole
Health Club / Athletic Facility											P	P	P	P	P				4/1,000 sf
Racetrack	S																S		25/acre
Sport Shooting Range	S															S			2/1,000 sf
Park	P	P	P	P	P	P	P	P	P	P	P		P	P	P				4/acre

Land Use	AG	SF-20.0	SF-14.5	SF-12.0	SF-10.5	SF-8.4	SF-7.2	SF-6.0	MD	MF	C-1	C-2	MU	DT		I-1	I-2	Use-Specific Standards	Parking Standards
														CE	ND				
Swimming Pool		P	P	P	P	P	P	P	P	P		P	P					Sec. 9.04.033(b)	5/pool
Public / Institutional Uses																			
Cemetery	P	S	S								S	S				S		Sec. 9.04.034(a)	2/acre
Civic Center	P	~~P~~	~~P~~	~~P~~	~~P~~	~~P~~	~~P~~	~~P~~	P	P	P	P	P	P	P	P	P		4/1,000 sf
Civic Club or Lodge											P	P	P	P					2/1,000 sf
College or University												S				S			2.5/1,000 sf
Correctional Facility	S															S			1.5/1,000 sf
Fairgrounds	S															P			30/acre
Public Library, Museum, or Art Gallery		S	S	S	S	S	S	S	S	S	P	P	P	P	P				2.5/1,000 sf
Religious Land Use	P	P	P	P	P	P	P	P	P	P	P	P	P	P	P	P			3/1,000 sf
School		P	P	P	P	P	P	P	P	P	S	S	S	S	S				2.5/1,000 sf
Technical School	S										S	P				P			4/1,000 sf
Industrial Uses																			
Brewery/Distillery																P	P		2.5/1,000 sf
Commercial Cleaning Facility																P	P		1.5/1,000 sf
Commercial Kitchen												S				P			1.5/1,000 sf
Contractor's Shop and Storage Yard																P	P	Sec. 9.04.035(a)	1/1,000 sf
Industrial and Manufacturing, Heavy																	S		1/1,000 sf
Industrial and Manufacturing, Light																P	P		1.5/1,000 sf
Industrial Park																P	S		1.5/1,000 sf
Research and Development												S	S	S		P	P		1.5/1,000 sf
Salvage Yard																S	P		1/1,000 sf
Self-Storage (Mini-Warehouse)												S				P		Sec. 9.04.035(b)	1/30 storage units (at least 5 spaces required)
Warehouse, Distribution, and Wholesale																P	P		1/1,000 sf
Wholesale Showroom Facility												S				P	P		1/1,000 sf + 1/300 sf of office, sales, or display areas

Land Use	AG	SF-20.0	SF-14.5	SF-12.0	SF-10.5	SF-8.4	SF-7.2	SF-6.0	MD	MF	C-1	C-2	MU	DT		I-1	I-2	Use-Specific Standards	Parking Standards
														CE	ND				
Caretaking Services Uses																			
Adult Day Services											P	P							2.5/1,000 sf
Assisted Living Facility									S	S	P	S	S		S				1 space/ 5 beds. Minimum of 5 spaces~~2.5/1,000 sf~~
Chemical Dependency Facility	S										P								2/1,000 sf
Child Care Facility, Children's Home									S	S	P	P							2/1,000 sf
Child Care Facility, Daycare										S	S	S	S	S	S			Sec. 9.04.036(a)	2.5/1,000 sf
Child Care Home (≤6 Children)	~~S~~P	~~S~~P	~~S~~P	~~S~~P	~~S~~P	~~S~~P	~~S~~P	P	S	S									2/1,000 sf
Child Care Home (≥7 Children)	S	S	S	S	S	S	S	S	S	S									2/1,000 sf
Community Home for Persons with Disabilities	S								S	S									2/1,000 sf
Funeral Services												P				P			2/1,000 sf
Halfway House	S							S	S										1 + 0.75/bedrooms ~~2/1,000 sf~~
Medical Care Facility											S	P							3.5/1,000 sf
Medical Office											P	P	P	S	P				3/1,000 sf
Transportation Uses																			
Airport	S																		2/acre
Bus Terminal																P			--
Parking Facility													S	S	S				--
Railroad Station													S	S	S	S			--
Railroad Team Track and Right-of-Way																P			--
Transit Station													S	S	S	S			--
Truck or Motor Freight Terminal																P			--
Infrastructure Uses																			
Drone Delivery Hub	S									S	S		S			P	P	Sec. 9.04.037(c)	1 space when the primary use on an individually platted lot.

Land Use	AG	SF-20.0	SF-14.5	SF-12.0	SF-10.5	SF-8.4	SF-7.2	SF-6.0	MD	MF	C-1	C-2	MU	DT		I-1	I-2	Use-Specific Standards	Parking Standards
														CE	ND				
																			No additional spaces as an accessory use.
Drone Delivery Pick-Up Kiosk	P									P	P	P	P	S	S	P	P	Sec. 9.04.037(d)	1 space when the primary use on an individually platted lot. No additional spaces as an accessory use.
Drone Delivery Hub. An area of land, structural surface, building, or structure with one or more designated drone staging areas for use by unmanned aircraft systems (UAS) approved by the Federal Aviation Administration to distribute commercial goods by air. This includes any appurtenant areas used or intended for use for unmanned aircraft system buildings, structures, and other facilities. This use is for permanent infrastructure and	P	S	S	S	S	S	S	S	S	S						P			--

overnight storage of UAS. (1) Drone Delivery Pick-Up Kiosk. An area of land, structural surface, building, or structure with one or more designated drone staging areas for use by unmanned aircraft systems (UAS) approved by the Federal Aviation Administration to distribute commercial goods by air. This includes any appurtenant areas used or intended for use for unmanned aircraft system buildings, structures, and other facilities. This use is for temporary stops and no overnight storage of UAS.																			

Land Use	AG	SF-20.0	SF-14.5	SF-12.0	SF-10.5	SF-8.4	SF-7.2	SF-6.0	MD	MF	C-1	C-2	MU	DT		I-1	I-2	Use-Specific Standards	Parking Standards
														CE	ND				
Electrical Substation																			
Gas Metering Station	P	S	S	S	S	S	S	S	S	S	S	S				S	P		--
Gas Metering Station with Odorizer	S	S	S	S	S	S	S	S	S	S	S	S				S	S		--
Governmental Service Yard	S	S	S	S	S	S	S	S	S	S	P	P				P	P		--
Power Plant																	S		--
Radio, TV, or Microwave Operations, Amateur	S	S	S	S	S	S	S	S	S	S								Sec. 9.04.037(a)	--
Radio, TV, or Microwave Operations, Commercial	S	S	S	S	S	S	S	S	S	S	S	S	S	S	S	S	S	Sec. 9.04.037(b)	--
Recycling Facility																S	P		1/1,000 sf
Solid Waste Facility / Landfill																	S		1/1,000 sf
Solid Waste Transfer Station																S	P		1/1,000 sf
Telephone Exchange												P				P	P		--
Utility Shop																P			--
Agriculture Uses																			
Agriculture	P																		--
Agritainment	S																		1.5/1,000 sf
Feedlot	P																		--
Stable, Commercial	P																		--
Accessory Uses																			
Accessory Building	P	P	P	P	P	P	P	P	P	P	P	P	P	P	P	P	P	Sec. 9.04.038	--
Accessory Dwelling Unit	P	P	P	P	P	P	P	P	P				P		P			Sec. 9.04.038(e)(1)	1/DU
Barndominium	P																		--
Carport	P																		--
Donation Collection Bin											P	P	P		P	P		Sec. 9.04.038(e)(2)	--
Fuel Pump											P	P	P	P	P	P	P	Sec. 9.04.038(e)(3)	1/2 Pumps
Home Occupation	P	P	P	P	P	P	P	P	P						P			Sec. 9.04.038(e)(4)	1/DU
Garage	P	P	P	P	P	P	P	P	P	P					P				--
Outdoor Dining											P	P	P	P	P				1/200 sf
Outdoor Display	P											P	P	P	P	P		Sec. 9.04.038(e)(5)	--
Outdoor Storage	P											S				P	P	Sec. 9.04.038(e)(6)	--

Land Use	AG	SF-20.0	SF-14.5	SF-12.0	SF-10.5	SF-8.4	SF-7.2	SF-6.0	MD	MF	C-1	C-2	MU	DT		I-1	I-2	Use-Specific Standards	Parking Standards
														CE	ND				
Retail Ice and Dispensed Water Sales											P	P				P	P		--
Service Bay	P										P	P	P	P	P	P	P	Sec. 9.04.038(e)(7)	1/Bay
Stable, Private	P	P																	--
Swimming Pool, Private	P	P	P	P	P	P	P	P	P	P					P			Sec. 9.04.038(e)(8)	--
Wind Energy Conversion System	P	S	S	S	S	S	S	S	S	S	S	S				P	P	Sec. 9.04.038(e)(9)	--
Temporary Uses																			
Batching Plant	P	P	P	P	P	P	P	P	P	P	P	P				P	P		--
Construction Yard																P			--
Farmers Market											S	P	S	P	P				15/acre
Field or Sales Office		P	P	P	P	P	P	P	P	P									--
Flea Market	P											P				P			15/acre
Itinerant Vendor	S										S	S	S	S	S	S		Sec. 9.04.039(d)(1)	--
Seasonal Roadside Stand	P																		1/stand

Sec. 9.04.029. Residential Use-Specific Standards

(a) Industrialized Home (Modular Home).

(1) An Industrialized Home (Modular Home) meets or exceeds all building code requirements that apply to other dwelling units concerning on-site construction.

(2) An Industrialized Home (Modular Home) conforms to all applicable zoning regulations for its respective zoning district.

(3) An Industrialized Home (Modular Home) has a value equal to or greater than the median taxable value for each single-family dwelling located within 500 feet of the lot on which the dwelling is proposed to be located, as determined by the most recent County certified tax appraisal roll.

(4) An Industrialized Home (Modular Home) has exterior siding, roofing, roofing pitch, foundation fascia, and fenestration compatible with the single-family dwellings located within 500 feet of the lot on which the dwelling is proposed to be located.

(5) An Industrialized Home (Modular Home) complies with municipal aesthetic standards, setbacks, subdivision control, landscaping, square footage, and other site requirements applicable to single-family dwellings.

(6) An Industrialized Home (Modular Home) is securely fixed to a permanent foundation.

(7) An Industrialized Home (Modular Home) is set on a solid slab structure and/or 18- to 20-inch runners.

(b) Live-Work Unit.

(1) A Live-Work Unit shall comply with the regulations specified in Sec. 9.04.042.

(c) Multifamily Dwelling.

(1) Generally.

(A) Where a Multifamily Dwelling is erected to create inner courts, the faces of all opposite walls in those courts shall be at least 30 feet apart, and no balcony or canopy shall extend into that court area more than 5 feet.

~~(B)~~ Each lot or parcel of land that is used for a Multifamily Dwelling shall provide A minimum of 20% of the gross area of the property must be provided as open space, of which at least 40% must be usable or improved open space. ~~on the same lot or parcel of land usable open space, per Table 20: Multifamily Dwelling Open Space below.~~

~~Table 20: Multifamily Dwelling Open Space~~

~~Number of Bedrooms~~	~~Size~~
~~1 or less~~	~~600 square feet~~
~~Each additional bedroom over 1~~	~~300 square feet~~

(C) Each residential unit must have a private outdoor space. Upper-story units must include a balcony except within 50 feet of a single-family dwelling, and ground-floor units must provide a minimum of 120 square feet of patio space directly accessible from the unit.

(D) Enclosed buildings, parking lots, driveways, required landscape buffers, floodplains, erosion hazard setbacks, and drainage channels are excluded from the calculation. Not more than 50% of a retention pond or an amenitized detention pond shall count towards open space.

(E) Gated or un-gated pedestrian connections will be provided to adjacent schools, parks, and nonresidential developments.

~~(C)~~(F) A Multifamily Dwelling shall comply with the additional regulations established in Sec. 9.04.042.

(d) Townhome Unit and Single-Unit or Duplex Unit Park.

(1) All residential units within a Townhome Unit and Single-Unit or Duplex Unit Park are restricted to 35 feet in height.

(2) Where the residential units within a Townhome Unit or Single-Unit or Duplex Unit Park are erected to create inner courts, the faces of all opposite walls in those courts shall be at least 30 feet apart, and no balcony or canopy shall extend into that court area more than 5 feet.

(3) A Townhome Unit or Single-Unit or Duplex Unit Park shall provide the required amount of usable open space, per Table 20: Townhome Unit or Single-Unit or Duplex Unit Park Open Space below.

Table 20: Townhome Unit or Single-Unit or Duplex Unit Park Open Space

Number of Bedrooms	Size
1 or less	600 square feet
Each additional bedroom over 1	300 square feet

(4) Each detached residential dwelling unit shall have a 10-foot minimum separation from any other detached residential dwelling unit (refer to Figure 2: Townhome Unit or Single-Unit or Duplex Unit Park Layout Example).

Figure 2: Townhome Unit or Single-Unit or Duplex Unit Park Layout Example

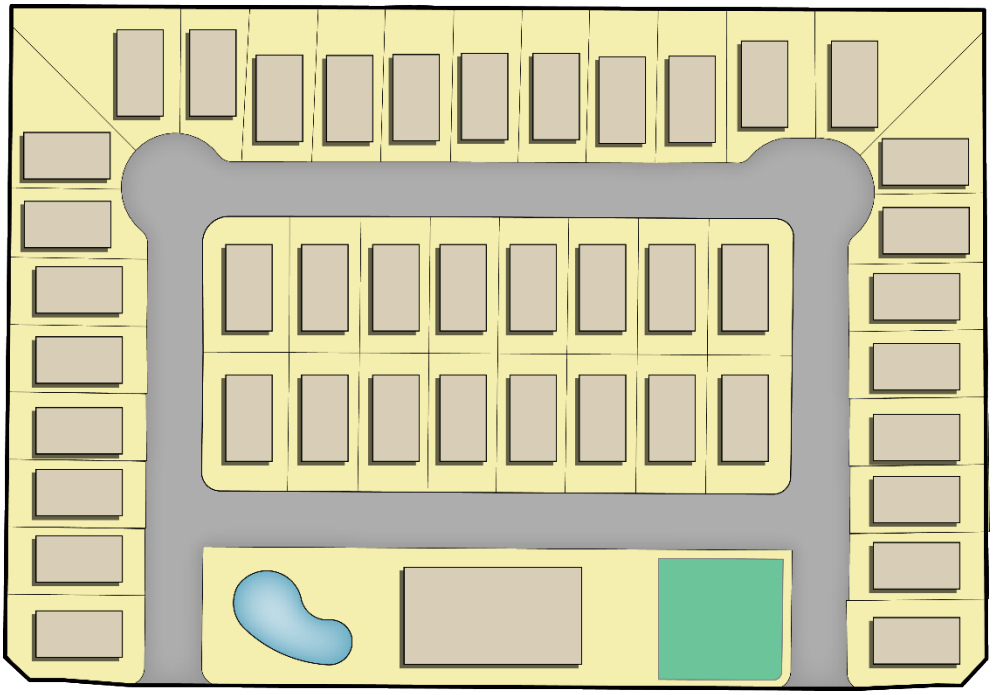

Please Note: A Town Home or Single-Family or Duplex Home Park is developed on **one parcel** or lot. The example above shows lines indicating rental spaces associated with dwelling.

(5) A Townhome Unit or Single-Unit or Duplex Unit Park shall comply with the additional regulations established in Sec. 9.04.042.

Sec. 9.04.030. Lodging/Group Living Use-Specific Standards

(a) Bed and Breakfast Facility.

(1) A Bed and Breakfast Facility is owner-occupied and managed at all times.

(2) The maximum number of rented bedrooms is five (5).

(3) No cooking facilities are allowed in any of the bedrooms.

(4) A Bed and Breakfast Facility shall meet all of the minimum requirements of the City-County Health Department and shall conform in all respects to the requirements of the fire code, building code, electrical code, and plumbing code.

(5) A Bed and Breakfast Facility is responsible for collecting the City hotel/motel tax.

(6) All City-County Health Officers, Building Inspectors, the Fire Marshal and their assistants, and other code enforcement officials of the City shall have the right to go on any premises of a Bed and Breakfast Facility during normal business hours for the purpose of verifying compliance with this subsection and all other applicable ordinances of the City.

(b) Boarding/Rooming House.

(1) No more than ten (10) occupants (including any resident staff and family) shall occupy any Boarding/Rooming House at one time.

(2) The maximum length of stay for any occupant is fourteen (14) consecutive days in any one calendar month.

(3) A Boarding/Rooming House shall not be located within one thousand (1,000) feet of any other Boarding/Rooming House.

Sec. 9.04.031. Automotive Use-Specific Standards

(a) Auto Dealership.

(1) An Auto Dealership shall be located one hundred fifty (150) feet from any residential district.

(2) An Auto Dealership shall not be located within one hundred fifty (150) feet of any other Auto Dealership.

(3) No more than fifty percent (50%) of the total building floor area may be used for related accessory uses such as retail sales, repair and service, and washing.

(4) Inventory parking spaces shall not count toward the minimum parking requirements.

(b) Auto Dealership, Used.

(1) An Auto Dealership, Used shall be located one hundred fifty (150) feet from any residential district.

(2) An Auto Dealership, Used shall not be located within one hundred fifty (150) feet of any other Auto Dealership or Auto Dealership, Used.

(3) No more than fifty percent (50%) of the total building floor area may be used for related accessory uses such as retail sales, repair and service, and washing.

(4) Inventory parking spaces shall not count toward the minimum parking requirements.

(c) Auto Repair, Heavy.

(1) All Auto Repair, Heavy activities shall take place within an enclosed space.

(2) An Auto Repair, Heavy facility shall be located one hundred fifty (150) feet from any residential district or school use.

(d) Auto Repair, Light.

(1) All Auto Repair, Light activities shall take place within an enclosed space.

(2) An Auto Repair, Light facility shall be located one hundred fifty (150) feet from any residential district or school use.

(e) Car Wash.

(1) Local Commercial (C-1) District.

(A) A Car Wash shall not be located within one hundred fifty (150) feet of any residential district.

(B) A Car Wash shall be closed for business between the hours of 10:00 PM and 7:00 AM.

(C) A Car Wash shall only be self-service.

(D) All bays and overhead doors shall be oriented away from any residential district.

(2) All Other Zoning Districts.

(A) A Car Wash shall not be located within one hundred fifty (150) feet of any residential district.

(B) All bays and overhead doors shall be oriented away from any residential district.

Sec. 9.04.032. Commercial Use-Specific Standards

(a) Adult Entertainment Establishment.

(1) An Adult Entertainment Establishment shall not be located within 1,000 feet of a:

(A) Public/Institutional Use,

(B) Child Care Facility,

(C) Residential Use, or

(D) Adult Entertainment Establishment.

(2) An Adult Entertainment Establishment shall comply with Article 5.07 of the Anna Code.

(b) Sale of Alcoholic Beverages.

(1) Applicability.

(A) The storage, possession, or sale of any alcoholic beverage, when permitted by the laws of this state, shall be regulated and governed as provided here and in other applicable ordinances and regulations of the City.

(B) This subsection shall not apply when the storage or serving of alcoholic beverages is strictly for the consumption of the owners of the premises and their guests at no charge.

(2) Sale of Alcoholic Beverages in Residential Areas.

(A) The sale of alcohol is prohibited in any residential area within the City's corporate limits unless expressly exempted by this subsection or a City Council variance.

(B) The term "residential area" includes locations that are within any of the following zoning districts or areas:

(i) SF-20.0, SF-14.5, SF-12.0, SF-10.5, SF-8.4, SF-7.2, SF-6.0, MD, and MF;

(ii) PD - Any residential part of a Planned Development District; or

(iii) Any tract, lot or subdivision upon which is located any of the "residential uses" as defined in Table 19: Use Table, as amended.

(3) Bar (75% sales from alcohol) Separation Standard.

(A) A Bar (75% sales from alcohol) may not be located within 1,000 feet of a public school, private school, church, day-care center or child-care facility, as those terms are described in the Texas Alcoholic Beverage Code. The measurement of the distance between such establishment and the church or public hospital shall be along the property lines of the street fronts and from front door to front door, and in direct line across intersections. The measurement of the distance between such establishment and the public school, private school, day-care center, or child-care facility shall be:

(i) In a direct line from the property line of the public or private school to the property line of the place of business, and in a direct line across intersections; or

(ii) If the permit or license holder is located on or above the fifth story of a multi-story building, in a direct line from the property line of the public or private school to the property line of the place of business, in a direct line across intersections, and vertically up the building at the property line to the base of the floor on which the permit or license holder is located.

(B) A Bar (75% sales from alcohol) may not be located closer than 1,000 feet to an existing Bar (75% sales from alcohol).

(i) The measurement of the distance between those establishments shall be in a straight line in all directions from the primary entrance of the existing establishment to the primary entrance of the proposed establishment.

(ii) For the purposes of this subsection, the term "existing Bar (75% sales from alcohol)" means an establishment that is in lawful operation or that holds a current and valid certificate of occupancy for that operation.

(C) Exception. The Downtown (DT) District shall be exempt from the Bar (75% sales from alcohol) Separation Standard.

(4) Retail Stores. It shall be unlawful for any business that derives revenue of selling alcoholic beverages (off-premise consumption) within 150 feet of any public or private school, daycare, religious facility. The measurement of the distance between the place of business and the public or private school shall be:

(A) In a direct line from the property line to the property line of the place of business, and in a direct line across intersections; or

(B) If the permit or license holder is located on or above the fifth story of a multi-story building, in a direct line from the property line of the public or private school to the property line of the place of business, in a direct line across intersections, and vertically up the building at the property line to the base of the floor on which the permit or license holder is located.

(C) Exception. The Downtown (DT) District shall be exempt from the above Separation Standard.

~~(4) Variances~~Exception. ~~After a recommendation from the Planning and Zoning Commission,~~ City Council may grant an exception ~~variance upon a determination that enforcement of the regulation~~ in a particular instance where all schools, religious facilities, or daycare facilities within the required separation distance provide a letter of recommendation. ~~:~~

~~(A) Is not in the best interest of the public,~~

~~(B) Constitutes waste or inefficient use of land or other resources,~~

~~(C) Creates an undue hardship on an applicant for a license or permit,~~

~~(D) Does not serve its intended purpose, or~~

~~(E) Is not effective or necessary.~~

(c) Brewpub/Wine Bar.

(1) Downtown (DT) District-Core (CE).

(A) The maximum size of a Brewpub is 10,000 square feet.

(B) Accessory outdoor customer seating/dining areas are allowed if they meet the applicable district's dimensional standards.

(C) Brewpub/wine bar shall meet the requirements of Sec. 9.04.032(b).

(d) Commercial Amusement, Outdoor.

(1) A Commercial Amusement, Outdoor use shall not be located within three hundred (300) feet of any residential district.

(e) Convenience Store, Fuel Pumps.

(1) Any pump island or other structure shall not be less than twenty (20) feet from adjacent property lines or street and highway right-of-way lines.

(2) Overhead canopies shall not be less than twenty (20) feet from any right-of-way line or property line.

(f) Food Truck Park.

(1) All mobile vendors must have valid required health inspection permits.

(2) Adequate restroom facilities shall be provided either on-site or through a shared use agreement with a neighboring business. Portable toilets, if used, must be screened from view of the public per Sec. 9.04.046.

(3) Electrical, water, and wastewater connections shall be provided.

(4) Above-ground utility connections shall not interfere with pedestrian or vehicular safety and shall not be located in customer service areas or customer parking lots.

(5) Food Truck Park sites shall be defined by curbs (i.e., continuous curb cuts are prohibited) to confine ingress and egress to defined access points to ensure the safety of pedestrians within the park.

(6) A barrier shall be located between any vehicular areas and the customer service areas. The barrier may be implied or physical and constructed with landscaping elements; gated fencing; changes in ground surface texture, material, or color; or similar treatments.

(7) Drive-throughs are not permitted in conjunction with a Food Truck Park.

(8) Signage is allowed on the mobile vendor vehicle itself but no detached signage is allowed.

(9) A waste receptacle is required for every mobile vendor and waste shall be removed daily.

(10) Food Truck Park sites shall only operate on an approved surface per Article 9.03 (Design Standards).

(g) Grocery Store.

(1) Local Commercial (C-1) District and Downtown (DT) District-Core (CE).

(A) The maximum size of a Grocery Store is 15,000 square feet.

(B) No drive-throughs are allowed.

(h) Kennel.

(1) Local Commercial (C-1) District and Downtown (DT) District-~~Core~~ Neighborhood (ND~~CE~~).

(A) A Kennel shall not be located within one hundred (100) feet of any residential district.

(B) No outside runs are allowed.

(2) All Other Zoning Districts.

(A) A Kennel shall not be located within two hundred fifty (250) feet of any residential district.

(B) Outside runs are allowed.

(C) Outside runs shall be operated only with an attendant present ~~on the premises twenty-four (24) hours a day~~.

(D) At a minimum, the animals shall be enclosed within a six-foot (6') fence or wall to restrain animals from running at large.

(i) Mixed-Use ~~Development~~Building.

(1) No more than 50% of the Mixed-Use ~~Development~~ Building cumulative building square footage shall consist of dwelling units or associated residential uses (including but not limited to leasing office, gym, mail room) on the ground floor. Structured parking shall be excluded from this calculation.

(2) ~~At least 25% of the~~Other uses within the Mixed-Use ~~Development~~ Building shall consist of retail, restaurant, or office uses.

(3) A Mixed-Use ~~Development~~ Building shall comply with the regulations established in Sec. 9.04.042.

(j) Office.

(1) Local Commercial (C-1) District, Mixed-Use (MU) District, Downtown (DT) District-Core (CE), and Downtown (DT) District-Neighborhood (ND).

(A) The maximum size of an Office is 10,000 square feet.

(k) Pawn Shop / Pay Day Loans.

(1) Regional Commercial (C-2) District.

(A) A Pawn Shop / Pay Day Loans use shall not be located within one thousand (1,000) feet of any other Pawn Shop / Pay Day Loans use.

(B) No outdoor display is allowed.

(l) Private Club.

(1) A Private Club shall not be located within three hundred (300) feet of any of the following: religious land use, medical care facility, school, or public park.

(2) A Private Club for the on-premises sale or consumption of alcoholic beverages shall be located within an area containing at least two acres.

(3) Operational Regulations.

(A) Not less than 50% of the gross receipts of such establishment shall be derived from the sale of food consumed on the premises. Food service shall be available at any time alcoholic beverages are being served. The service of alcoholic beverages without food is prohibited in

dining areas and is restricted to a bar or lounge area as described in this section. The holder of such permit shall provide audits at its expense as more fully set forth in this section.

(B) Such establishments shall contain a minimum of 100 dining seats, allowing a minimum of 12 square feet of dining area per dining chair. Calculation of the square feet of the dining area shall exclude kitchen and storage areas, bar and lounge areas, and cashier and reception areas.

(C) Such establishments shall comply with all of the provisions of the Texas Alcoholic Beverage Code and receive a private club permit from the state within six months from the date of issuance of a specific use permit by the City, each such limitation in time is subject to extension by the City Council.

(D) The City Council may revoke a specific use permit upon the finding that any of the operational requirements imposed at the time of granting the permit are not met or thereafter cease to exist. Said specific use permit shall be subject to review based on a recommendation from the police department that public safety has been or is being jeopardized. The City Manager and the Chief of Police are specifically authorized to receive, accept, and investigate complaints from any source.

(E) A private club with a bar or lounge area shall be designed so that patrons can enter only from an area within the primary use, e.g., the dining or reception area of a restaurant, hotel, or motel. Emergency exits directly to the outside are permitted.

(F) No signs advertising the sale of alcoholic beverages shall be permitted other than those authorized under the Texas Alcoholic Beverage Code and the City sign ordinance.

(4) Audit.

(A) The permittee of each private club in the City that has been in operation for at least six months prior to a December 31st calendar year shall select and engage a certified public accounting firm to conduct an annual audit of the operations of such private club during such period. The year upon which such audit shall be conducted shall begin January 1 and end December 31. This audit shall determine whether the permittee has complied with the gross receipt requirements of subsection (3) of this section. The audit shall clearly reflect:

(i) The total gross receipts of the permittee for the audit year from all operations on the premises for which the specific use permit for a private club is issued;

(ii) The percentage of such gross receipts is derived from the sale of food; and

(iii) The percentage of such gross receipts is derived from the sale of alcoholic beverages.

(B) The audit shall indicate whether the City should make further inquiry into the permittee's operations to determine whether all other requirements for the operation of a private club were satisfied during the audit year.

(C) The audit shall be completed and a copy furnished to the City Council through the City Manager's Office no later than April 1 of the year following the audit year. The audit shall be performed, and a copy furnished to the City Manager at the sole expense of the permittee.

(D) If not received by April 1, the City Council shall have the right to select and engage a certified public accounting firm to perform the audit described herein. The permittee shall reimburse the City for all expenses incurred in obtaining this audit.

(m) Restaurant.

(1) Local Commercial (C-1) District.

(A) Drive-throughs may be permitted by a specific use permit.

(B) Accessory outdoor customer seating/dining areas are allowed if they meet the applicable district's dimensional standards.

(2) Regional Commercial (C-2) District.

(A) Drive-throughs.

(i) Drive-throughs are allowed.

(ii) Drive-throughs with individual service speakers shall not be permitted within 150 feet of any residential district unless the speaker is appropriately screened by a sound abatement system. The Planning and Zoning Commission may recommend that City Council require wing walls, landscape screens, changes in building orientation, and/or other design elements to screen and provide noise abatement to minimize the impact of individual service speakers on residential districts.

(iii) See Stacking Requirements in §9.04.043.

(B) Accessory outdoor customer seating/dining areas are allowed if they meet the applicable district's dimensional standards.

(3) Downtown (DT) District-Core (CE) and Downtown (DT) District-Neighborhood (ND).

(A) No drive-throughs are allowed.

(B) Accessory outdoor customer seating/dining areas are allowed if they meet the applicable district's dimensional standards.

(n) Retail Store.

(1) Local Commercial (C-1) District, Downtown (DT) District-Core (CE), and Downtown (DT) District-Neighborhood (ND).

(A) No drive-throughs are allowed.

(o) Veterinarian Facility.

(1) Local Commercial (C-1) District.

(A) A Veterinarian Facility shall not be located within one hundred (100) feet of any residential district.

(B) No outside runs are allowed.

(2) All Other Zoning Districts.

(A) A Veterinarian Facility shall not be located within two hundred fifty (250) feet of any residential district.

(B) Outside runs are allowed.

(C) Outside runs shall be operated only with an attendant present ~~on the premises twenty-four (24) hours a day~~.

(D) At a minimum, the animals shall be enclosed within a six-foot (6') fence or wall to restrain animals from running at large.

Sec. 9.04.033. Recreation Use-Specific Standards

(a) Golf Course.

(1) The minimum size of a Golf Course is 20 acres.

(2) All exterior lighting to illuminate the Golf Course or any accessory use shall terminate at 10:00 PM. Lighting for walls, security measures, sconces, and parking facilities are excluded from this requirement.

(b) Swimming Pool.

(1) A Swimming Pool shall not be located in any required front or side yard abutting a street.

(2) A wall or fence, not less than six feet in height, with self-enclosing and self-latching gates at all entrances, completely encloses either the pool area or the surrounding yard area.

(3) All lighting of the Swimming Pool is shielded or directed to face away from adjoining residences. If lights are not individually shielded, they shall be so placed, or the enclosing wall or fence shall be so designed, that direct rays from the lights shall not be visible from adjacent properties.

(4) No broadcasting system is used to advertise the operation of the pool or to attract people to the premises. This shall not prevent a public address system from being used for the pool's supervision and the swimmers' safety.

(5) Any swimming pool associated with a commercial or multifamily use or a homeowners' association requires ~~at least~~ a minimum 10-foot setback from any property line.

Sec. 9.04.034. Public/Institutional Use-Specific Standards

(a) Cemetery.

(1) A Cemetery shall have a two (2) acre minimum property size.

(2) No structure, excluding fences or walls, shall be located within fifty (50) feet of any residential use.

(3) Graves and monuments shall be set back at least twenty feet (20) from any property line.

Sec. 9.04.035. Industrial Use-Specific Standards

(a) Contractor's Shop and Storage Yard.

(1) Outdoor display and storage of materials, goods, equipment, tools, and products are allowed and shall comply with the regulations established in Sec. 9.04.038(e)(5) and Sec. 9.04.038(e)(6).

(2) A Contractor's Shop and Storage Yard shall comply with the regulations established in Sec. 9.04.046.

(b) Self-Storage (Mini-Warehouse).

(1) Access.

(A) The Self-Storage (Mini-Warehouse) shall be secured to limit access to tenants (or owners) and fire, police, or emergency service officials.

(B) A Self-Storage (Mini-Warehouse) shall provide adequate drive aisles between all buildings for vehicle circulation and fire and emergency access.

(2) Storage.

(A) A Self-Storage (Mini-Warehouse) unit shall not be used for the storage of explosives, ammunition, hazardous, or flammable materials.

(B) Self-Storage (Mini-Warehouse) units shall be used solely for the purpose of storage of goods and possessions and shall not be used for the operation of a business, hobby, band rehearsal, or any type of activity not related to the storage of personal property of the owner or tenant of the unit.

(C) No outdoor storage is permitted in the C-2 zoning district.

(D) Outdoor storage may be allowed within I-1 zoning district in approved on-site areas for vehicles and recreational equipment if they are covered by an awning or canopy structure.

(3) Accessory Office.

(A) The Self-Storage (Mini-Warehouse) may include an accessory on-site office.

(B) An office shall not exceed three thousand (3,000) square feet.

Sec. 9.04.036. Caretaking Use-Specific Standards

(a) Child Care Facility, Daycare.

(1) No portion of a Child Care Facility, Daycare site shall be located within 300 feet of gasoline pumps, underground gasoline storage tanks, or any other storage area for explosive or highly combustible materials.

(2) A Child Care Facility, Daycare shall be located adjacent to a street having a pavement width of 40 feet or greater.

(3) All Child Care Facility, Daycare shall comply with the following standards:

(A) All vehicular entrances and exits shall be clearly visible from the street.

(B) All passenger loading and unloading areas shall be located so as to avoid safety hazards from vehicular traffic, and adequate walkways shall be provided.

(C) Outdoor play areas shall be provided at a rate of 65 square feet per child based on the maximum design capacity of the facility. The Planning and Zoning Commission may waive this requirement if the Child Care Facility, Daycare is provided for less than four hours per day for an individual person.

(D) A maximum of one-half of the required outdoor play space may be provided off-site. When an off-premises outdoor play area is utilized, it must be located within 100 feet of the Child Care Facility, Daycare premises and safely accessible without crossing, at-grade, or any major or secondary thoroughfare.

(E) No Child Care Facility, Daycare shall be part of a one-family or two-family dwelling.

Sec. 9.04.037. Infrastructure Use-Specific Standards

(a) Radio, TV, or Microwave Operations, Amateur.

(1) Any Radio, TV or Microwave Operations, Amateur shall comply with (b), below.

(b) Radio, TV, or Microwave Operations, Commercial.

(1) Purpose. These regulations are adopted for the following purposes:

(A) To protect and provide for the public health, safety, and general welfare of the City.

(B) To enhance the ability of the providers of telecommunications services to provide such services to the community safely, effectively, and efficiently.

(C) To provide regulations for antenna support structures and antennas that provide secure mounting and construction and prevent interference with public safety communications equipment.

(D) To encourage the users of support structures and antennas to site share where possible and to locate all facilities, to the extent possible, in areas where the adverse impact on the community is minimal.

(E) To protect and enhance the City's environmental and aesthetic quality.

(F) To identify standards in order to ensure equitable treatment of providers of functionally equivalent telecommunications services.

(G) To comply with applicable state and federal law.

(2) Applicability.

(A) This subsection applies to all commercial and amateur antenna installations located outside of City right-of-way, unless exempted by (C), below.

(B) Applications for the location of antenna support structures on property owned, leased, or otherwise controlled by the City, and which comply with the requirements of (7) below, are subject to all applicable ordinances for such structures including, but not limited to (4), below.

(C) Direct broadcast satellite reception, multi-channel multi-point distribution (as defined by the FCC), television reception antennas, and amateur radio antennas meeting the following requirements do not require a permit unless mounted on a pole or mast that is 20 feet or more in height.

(i) In any zoning district, antennas that are one meter (39 inches) or less in diameter.

(ii) In the nonresidential zoning districts, antennas that are 2 meters or less in diameter.

(iii) In any zoning district, antennas designed to receive television broadcasts.

(iv) In any zoning district, amateur radio antennas concealed behind, on, or within attics, eaves, gutters, or roofing.

(v) In any zoning district, amateur radio ground-mounted whips and wire antennas unless mounted on a pole or mast over 20 feet in height.

(D) An AM array shall be subject to these regulations. An AM array consisting of one or more support structure units and supporting ground equipment, which functions as one AM broadcasting antenna, shall be considered one support structure. Measurements for setbacks and separation distances shall be measured from the outer perimeter of the

support structures, including the guide wires, in the array. Additional support structure units may be added within the perimeter of the AM array by right.

(3) Application Requirements.

(A) Applications for commercial antennas and antenna support structures shall include the following:

(i) The distance between the proposed support structure, the nearest residential unit, and/or residential zoning district boundary line.

(ii) An inventory or map of the applicant's existing support structures, antennas, or sites previously approved for such, either owned or leased, both within the City and within one mile of the City Limits, including specific information about each support structure's location, height, and design.

(iii) The separation distance between the proposed support structure or antenna and these support structures shall also be noted.

(iv) Certification of the following:

a. That the applicant has sought and received all franchises or permits required by the City for the construction and operation of the communication system;

b. Identification of the backhaul provider and connectivity locations for the installation; (Applicants must notify the City of any change in site sharing or backhaul providers within 30 days of the change.)

c. Certification of the structural engineering information;

d. Certification of whether the installation is a network node; and

e. A notarized statement from the applicant that the proposed support structure can accommodate the site sharing of additional antennas.

(v) Information concerning the finished color, alternative design standards (if applicable), and method of fencing.

(vi) The application may require a site plan and landscape plan in accordance with this ordinance. Platting of the property may be required in accordance with Article 9.02 (Subdivision Regulations).

(vii) The Director may establish procedures, forms, and standards with regard to application materials and information constituting a complete application for communications antenna, commercial and amateur.

(B) All commercial signs, flags, lights, and attachments, other than those required for emergency identification, communications operations, structural stability, or as required for flight visibility by the FAA and FCC shall be prohibited on any antenna or antenna support structure. However, lights may remain or be replaced on light standards that are altered or replaced to serve as antenna support structures.

(C) All antennas must meet or exceed current standards and regulations of the FAA, the FCC, and any other state and federal agency with regulatory authority over support structures and antennas. If standards change, owners must comply within six months or as the regulating authority requires.

(D) A permit is required to erect or install an antenna, antenna support structure, and related equipment, unless the particular antenna is exempt from regulation, as stated in (2)(C)

above. All installations must comply with applicable state and local building codes and the standards published by the Electronic Industries Association.

(E) All support structures and antennas must be constructed and operated in a manner that does not create electromagnetic or other interference with the City of Anna's radio frequencies and public safety operations as required by the FCC.

(F) No commercial antenna, antenna support structure, microwave reflector/antenna, or associated foundations or support wires, or ground equipment may be located within any required front, side, or rear yard setback.

(G) All antennas and antenna support structures owned and/or operated by a governmental entity shall be permitted by right in any district.

(H) All antennas and support structures must meet visibility requirements as defined in Sec. 9.04.041 and Sec. 9.04.046, even if a permit is not required.

(I) Safeguards shall be utilized to prevent unauthorized access to an antenna support structure. Safeguards include those devices identified by the manufacturer of the antenna support structure, a fence, climbing guard, or other commercially available safety devices. Climbing spikes must be removed after use.

(J) Temporary antennas shall only be allowed in the following instances:

(i) In conjunction with a festival, carnival, or other activity requiring a Temporary Use Permit from the City.

(ii) In case of emergency as required by the City's Police or Fire Departments.

(iii) When needed to restore service on a temporary basis after failure of an antenna installation. The City must be notified within 72 hours of the placement of a temporary antenna. If the temporary antenna is to be needed for more than seven days, then the provider must acquire a permit for the use.

(4) General Requirements.

(A) Antennas and support structures may be considered either principal or accessory uses.

(B) Antenna installations shall comply with all other requirements of this article with the exception of those specified within this section.

(C) Commercial antennas and antenna support structures are permissible in all zoning districts when the following requirements are met:

(i) When totally enclosed within or integrated into the design of any building or building feature permitted in the zoning district. A commercial antenna may be mounted flush to the exterior of a building if it is painted and integrated into the overall architectural design.

(ii) A commercial antenna may be mounted on or incorporated into flagpoles.

(iii) Attached to a utility structure in any zoning district, except if the communications antenna and antenna support structures exceed 60 feet in height, provided that the antenna does not extend more than 10 feet above the highest point of the utility structure. If the utility structure is 100 feet or more in height, the antenna cannot extend more than 15 feet above the utility structure.

(iv) Attached to an existing streetlight, park ballfield lights, and parking lot light standards, or the light standard in any zoning district may be replaced to accommodate the

antennas. The light standard's height may be increased by 15 feet, up to a maximum of 60 feet, to accommodate the antennas.

(v) Only Omni, Yagi, network nodes, and small panel antennas not exceeding one foot in width by eight feet in length, mounted flush to the support structure, are allowed in residential districts. Radio transceivers may also be used if the equipment box does not exceed 8” x 14” x 5”.

(D) Commercial antennas and antenna support structures are permissible in nonresidential districts when the following requirements are met:

(i) Sixty feet or less in height is allowed by right.

(ii) Greater than 60 feet in height is allowed with the approval of a specific use permit.

(iii) Must meet the applicable zoning district setback requirements.

(E) Commercial antennas and antenna support structures are prohibited in residential districts on lots used or platted for single-family, two-family, or single-family attached dwelling purposes, unless the conditions of (2)(C) are met.

(F) In addition to the allowances for commercial antennas and antenna support structures, network nodes are permissible in all zoning districts when the following requirements are met:

(i) Network nodes are allowed by right if the support structure on which antenna facilities are mounted is no more than 10 percent taller than other adjacent structures, or the support structure on which antenna facilities are mounted is not extended to a height more than 10 percent above its preexisting height as a result of the collocation of new antenna facilities.

(ii) Network nodes may be attached to a utility structure as described above if the antenna does not extend more than 10 percent above the preexisting height of the utility structure.

(iii) Network nodes may be attached to the light standard if the antenna is no more than 10 percent taller than other adjacent structures or the equipment is not extended to a height of more than 10 percent above its preexisting height as a result of the new antenna facilities.

(iv) No single antenna may be larger than three cubic feet.

(v) Overhead facilities and overhead transport facilities cannot be installed overhead on private property if the property is adjacent to a park or is adjacent to a street or thoroughfare that is classified Class E+ or smaller. All transport facilities must be underground per Article 9.02 (Subdivision Regulations).

(G) Setback, Separation, and Screening of Ground Equipment Requirements.

(i) The height of a support structure is limited to 200 feet in the industrial zoning districts and is limited to 120 feet in all other nonresidential zoning districts, except that for network nodes, the structure on which the antenna facilities are mounted cannot be more than 10 percent taller than other adjacent structures or the structure on which antenna facilities are mounted cannot extend to a height of more than 10 percent above its preexisting height as a result of the collocation of new antenna facilities.

(ii) Support structures, except for network node poles, must be set back a minimum of 125 percent of the support structure height from public rights-of-way.

(iii) Equipment buildings must comply with the screening requirements specified in (6) below, unless the equipment is attached to the support structure itself or enclosed within another structure on the property.

(iv) Support structures, guy wires, and accessory buildings must satisfy the minimum zoning district setbacks requirements. Where the district does not specify a minimum front yard setback, the front yard setback must be 50 feet; where the district does not specify a minimum side yard setback, the side yard setback must be 10 feet; where the district does not specify a minimum rear yard setback, the rear yard setback must be 10 feet.

(v) The following separation distances between support structures must be maintained:

Table 21: Separation Distances

	Lattice	Guyed	Monopole 75 feet in Height or Greater	Monopole Less than 75 feet in Height	Network Node
Lattice	5,000 ft	5,000 ft	1,500 ft	750 ft	150 ft
Guyed	5,000 ft	5,000 ft	1,500 ft	750 ft	150 ft
Monopole 75 feet in Height or Greater	1,500 ft	1,500 ft	1,500 ft	750 ft	150 ft
Monopole Less than 75 feet in Height	750 ft	750 ft	750 ft	750 ft	150 ft
Network Node	150 ft	150 ft	150 ft	150 ft	150 ft

(vi) Alternative or stealth designs, as defined by this ordinance, are exempt from the above spacing requirements.

(vii) No commercial antenna support structure, other than a network node 60 feet or greater in height, shall be closer to any residential district boundary line than a distance equal to the sum of the required setback specified for the zoning district in which such structure is located, plus 25 feet, plus twice the height of the portion of the structure above 25 feet, or 125% of the height of the support structure, whichever is greater. Such distance shall be measured as the shortest possible distance in a straight line from the structure to the closest point of a residential district boundary line. Setbacks from residentially zoned property do not apply to antennas, other than a network node, less than 60 feet in height or those attached to existing utility structures exceeding 60 feet in height, or to antennas placed wholly within a building or attached to a building; however, the building itself must meet all applicable setback requirements.

(H) A commercial antenna mounted on a roof or existing structure, other than a support structure, shall extend no more than 10 feet above the highest point of the structure.

(5) Site Sharing. Site sharing shall be accomplished as follows:

(A) All new support structures over 60 feet in height must be constructed to support antennas for at least two carriers, unless the structure is an alternative or stealth design, or the support structure is replacing an existing utility structure or light standard. Sufficient area for associated structures and equipment must also be provided.

(B) A support structure that is modified or reconstructed to accommodate site sharing shall be of the same type or design as the existing structure and is subject to the following regulations:

(i) The support structure may be modified or rebuilt to a height not to exceed 30 feet over the support structure's existing height, with a maximum height of 120 feet. If a specific use permit issued for the support structure stipulates a maximum height, the support structure may not be modified unless the specific use permit is amended.

(ii) Distance separation from other support structures and residential zoning district boundaries are based on the original support structure and are not increased.

(iii) The support structure may be moved on the same property within 50 feet of its existing location but may not be moved closer to residentially zoned property. The new location must be within the boundaries of the specific use permit.

(iv) The original support structure must be removed from the property within 90 days of the completion of the new support structure.

(C) Additional antennas attached to an existing support structure must comply with the design of the existing antenna on the support structure.

(6) Support Buildings and Equipment Storage. In order to minimize the effect on property values and to maintain the aesthetics of the area, support buildings and equipment storage areas or buildings must meet the following requirement:

(A) When mounted on rooftops, they must be screened by a parapet wall or other mechanical unit screening. Existing mechanical unit screening may be utilized if it provides screening in accordance with Sec. 9.04.046.

(B) When ground mounted, they must comply with the following:

(i) Meet all applicable front, side, and rear yard setback requirements.

(ii) Be of a neutral color compatible with surrounding structures.

(iii) Be screened by an evergreen landscape screen with an initial planting size of 5 gallons and 4 feet in height, with an ultimate height of 6 feet or a solid masonry fence 6 feet in height. Landscaping must be irrigated and maintained in a living, growing condition. Wooden fences are prohibited, and wrought iron or chain link may only be used in conjunction with a landscape screen.

(7) Antennas on City-Owned Property. Antennas owned by other than governmental entities may be located on property owned by the City of Anna under the following conditions:

(A) Antennas and support structures located within City right-of-way must comply with the City of Anna Subdivision Regulations, design manuals, and other ordinances.

(B) The antennas and support structures outside of the right-of-way may only be attached to an existing improvement or replace an existing improvement and must follow the requirements of (2)(C).

(C) Authorization for use of City property must be shown by a franchise, lease, license, permit, or other document duly executed by an authorized City representative and adopted in conformance with all applicable City regulations and guidelines for the property prior to submission of an application for review under this Section.

(8) Aesthetic, Stealth, and Alternative Design Requirements. In order to preserve property values and to maintain the aesthetics of the area, all antennas and antenna support structures must meet the following requirements:

(A) Support structures must have a galvanized steel finish or be painted a neutral color, unless other designs and colors are required by the Federal Aviation Administration for safety purposes.

(B) Antennas and supporting equipment installed on an existing structure other than a support structure must be of a neutral color that is compatible with the color of the supporting structure.

(C) Alternative or stealth designs, including flag poles, windmills, trees, clock towers, bell steeples, or other architectural elements, are encouraged for all antenna support structures, antennas, and supporting equipment.

(9) Amateur Radio Antennas and Support Structures

(A) Amateur radio antennas that are owned and operated by a federally licensed amateur radio station operator are allowed in any district. A building permit is required for antenna support structures of 20 feet or more in height.

(B) No amateur antenna support structure or antenna may be greater than 50 feet in height. However, the height of such antenna support structure or antenna may be increased up to 75 feet by installing a telescopic or crank-up support structure. Upon issuing a specific use permit, an amateur antenna support structure or antenna may be constructed to exceed these height limits.

(C) Amateur antenna support structures, antenna, or support wires must be located behind the face of the main building. No amateur antenna support structure, antenna, or support wires may be located in the required rear or side yard setback. For an amateur antenna support structure or antenna in excess of 35 feet, the setback from side setback lines must be increased one foot for every foot the height exceeds 35 feet.

(D) The bottom section of an antenna support structure may not exceed 48 inches in width. An antenna support structure with a bottom section with a width exceeding 30 inches but not exceeding 48 inches must be tapered.

(E) Only one amateur radio support structure may be erected on a residential lot. Additional antenna support structures may be allowed with the approval of a specific use permit. Excluded from this provision are monopoles 4 inches or less in diameter used exclusively to support wire antennas as referenced in (2)(C)(v).

(F) Amateur radio antennas, antenna support structures, bases, masts, and poles in existence or for which a permit was issued prior to the effective date of this ordinance shall be considered legally nonconforming uses subject to the provisions specified in Division 6.

(G) All specific use permits issued for amateur radio antennas or antenna support structures shall be conditioned that the permittee complies with this Article, as amended, and all other applicable City ordinances. City Council may also provide other conditions and restrictions when granting the specific use permit that it determines are necessary to protect and provide for the community's health, safety, and general welfare. After a public hearing and an opportunity for the permittee to be heard, City Council may cancel, revoke, or suspend a specific use permit granted hereunder if it finds that any of the conditions imposed at the time of the granting of the permit are not met or thereafter cease to exist.

(10) Appeals

(A) An applicant may appeal a decision of the Director for an antenna installation that does not require a specific use permit, other than a network node installation, to the Planning and Zoning Commission by filing a Notice of Appeal within 10 days following the date the Director notifies the applicant of the decision. The Planning and Zoning Commission may approve, conditionally approve, table, or deny an appeal. Decisions of the Planning and Zoning Commission may be appealed to City Council in accordance with Sec. 9.04.050(m).

(B) Any applicant may appeal a decision of the Director to the City Manager for a network node installation if the applicant believes that the denial of a permit materially inhibits the provision of service, in violation of Sections 253 or 332 of the Telecommunication Act of 1996. The City Manager may adopt rules regulating the process and requirements for appeals. The City Manager must issue a decision within ten (10) business days of receipt of the written appeal. The decisions of the City Manager are final. Failure to render a decision constitutes a denial.

(C) Any entity that desires to erect or utilize telecommunications facilities that would be limited by the provisions of this ordinance may petition the Planning and Zoning Commission to modify the ordinance. In determining the need to initiate an amendment to the ordinance, the Commission shall consider the extent to which strict application of these regulations would prohibit or have the effect of prohibiting communications services.

(c) Drone Delivery Hub.

(1) The location of the drone delivery hub area shall be designated on an approved site plan and shall not be placed:

(A) Within any required building setbacks;

(B) Within any required landscape edge;

(C) Within fire lanes, easements, maneuvering aisles, customer pick- up lanes, or required loading zones and parking spaces;

(D) So as to obstruct visibility or interfere with pedestrian or vehicle circulation; or

(E) In the street yard except when:

(i) the structures are greater than 30 feet from the nearest public right of way;

(ii) it is the primary use on an individually platted lot within a C-2, I-1, or I-2 zoning district; or

(iii) the Planning & Zoning Commission approves the location.

(2) Distance Separation.

(A) Allowed by right if located:

(i) More than 200 feet from any Single-Family Residential or Mixed-Density Residential Zoning District or a Single-Family Dwelling in an Agricultural Zoning District;

(ii) More than 150 feet from any Multifamily residential zoning district; and

(iii) More than 1,000 feet from another Drone Delivery Hub.

(iv) More than 500 feet from the property line when located on an Agriculture Use lot.

(B) A Specific Use Permit is required if located less than the aforementioned distances.

(C) No additional distance separation is required from the Extraterritorial Jurisdiction.

(3) Maximum area:

(A) 10,000 square feet per 10 acres in C-2 Zoning Districts. Exceptions may be granted by the Planning & Zoning Commission during Site Plan approval.

(B) No maximum area for industrial districts.

(C) To be determined during the SUP process for all other districts.

(4) Screening: See Sec. 9.04.046

(d) Drone Delivery Pick-Up Kiosk.

(1) The location of the drone delivery kiosk shall be designated on an approved site plan and shall not be placed:

(A) Within any required building setbacks;

(B) Within any required landscape edge;

(C) Within fire lanes, easements, maneuvering aisles, customer pick- up lanes, or required loading zones and parking spaces;

(D) So as to obstruct visibility or interfere with pedestrian or vehicle circulation; or

(E) In the street yard except when:

(i) the structures are greater than 30 feet from the nearest public right of way,

(ii) it is the primary use on an individually platted lot within a C-2, I-1, or I-2 zoning district, or

(iii) the Planning & Zoning Commission approves the location.

(2) Distance Separation.

(A) Allowed by right if located more than 100 feet from a Single-Family Residential Zoning District or Dwelling, and

(B) A Specific Use Permit is required if less than the aforementioned distances.

(C) No additional distance separation is required from the Extraterritorial Jurisdiction.

(3) Maximum area: 300 square feet per acre

(4) Maximum Height: Must comply with the zoning district's height requirements.

(5) Screening: See Sec. 9.04.046

Sec. 9.04.038. Accessory Uses and Structures

(a) Purpose. This section authorizes the establishment of accessory uses and buildings that are incidental and customarily subordinate to principal uses. An accessory use is "incidental and customarily subordinate" to a principal use if it complies with the standards established in this section. All principal uses allowed in a zoning district shall be deemed to include those accessory uses, buildings, and activities typically associated with the use, unless specifically prohibited in this section.

(b) Approval Procedure.

(1) Any of the accessory uses identified in this section may be allowed as an accessory to an authorized principal use provided that:

(A) The proposed accessory use is allowed as a principal or accessory use in the base district where proposed; and

(B) The proposed accessory use or building is consistent with this subsection's general and specific standards for accessory uses.

(2) Simultaneously with a Principal Use. Accessory uses or buildings may be reviewed as part of a review of an associated principal use. In cases where the principal use is subject to a Specific Use Permit, an accessory use may only be authorized in accordance with an approved Specific Use Permit.

(3) Subsequent to a Principal Use.

(A) Unless exempted, a building permit shall be required in cases where an accessory use or building is proposed subsequent to a principal use.

(B) In cases where the principal use is subject to a Specific Use Permit, an accessory use may only be authorized in accordance with the provisions in Division 5.

(c) Interpretation of Unidentified Accessory Uses. The Director shall evaluate applications for accessory uses that are not identified in this section on a case-by-case basis, based on the following standards:

(1) The definition of "accessory use" in Division 10 and the general accessory use standards and limitations established in this Section;

(2) The purpose and intent of the base districts in which the accessory use is located;

(3) Potential adverse effects the accessory use or building may have on other lots, compared with other accessory uses permitted in the district; and

(4) The compatibility of the accessory use with other principal and accessory uses permitted in the district.

(d) General Standards for All Accessory Uses. All accessory uses and buildings shall be subject to the general standards in this section, as well as any applicable supplemental standards in Subsection (e) and all standards applicable to the associated principal use as set forth in Division 3.

(1) Size. All accessory uses shall:

(A) Be clearly subordinate in area, extent, and purpose to the principal use or structure; and

(B) Not violate this Article's bulk, density, parking, landscaping, or open space standards when taken together with the principal use or structure.

(C) The floor area of any detached accessory building shall not exceed 50% of the floor area of the principal structure. The total combined floor area of all buildings shall not exceed the maximum lot coverage for the zoning district in which it is located. The Director may authorize a building to exceed this percentage if the building is used as a guest house, or is used for animal production or crop production associated with an agricultural use.

(2) Function. All accessory uses shall directly serve the principal use or building, and be accessory and clearly incidental to the principal use or building.

(3) Timing. Accessory uses shall not be constructed or established prior to the start of construction of the principal use or building. An accessory building shall not be used until the construction of the primary building is complete.

(4) Height. Accessory buildings shall be ~~limited to a maximum height of eighteen (18) feet~~subordinate to the primary structure unless exempted from the height requirements in this Zoning Ordinance.

(5) Location.

(A) Accessory uses or buildings shall be located on the same lot as the principal use or building.

(B) Accessory buildings shall not be located within platted or recorded easements.

(C) Accessory buildings shall be set back at least ~~five (5)~~four(4) feet from any side ~~and ten (10) feet from any~~ or rear lot line.

(D) The Director may authorize an accessory building on a vacant lot if the structure is used for animal production or crop production associated with an agricultural use, or used in conjunction with a park.

(e) Supplemental Standards for Accessory Use Standards.

(1) Accessory Dwelling Unit.

(A) An Accessory Dwelling Unit shall only be permitted when the lot is 6,000 square feet or great in area.

(B) Properties are limited to one Accessory Dwelling Unit.

~~(A)~~(C) A ~~D~~detached Accessory Dwelling Unit shall only be located in the rear of a lot.

~~(B)~~(D) An Accessory Dwelling Unit must comply with the required setbacks of the zoning district in which the unit is located.

~~(C)~~(E) An Accessory Dwelling Unit ~~must~~ shall comply with the zoning district's height requirements~~. An Accessory Dwelling Unit must~~ and shall ~~not exceed the height~~be subordinate ~~of~~to the primary dwelling.

~~(D)~~(F) An Accessory Dwelling Unit must ~~be at least five hundred (500) gross square feet in area~~contain a toilet, shower, sink, and cooking facilities.

~~(E)~~(G) An Accessory Dwelling Unit's building area~~must~~ shall ~~not exceed one thousand (1,000) gross square feet in area.~~be subordinate to the primary dwelling.

~~(F)~~(H) An Accessory Dwelling Unit must connect utilities to those of the primary dwelling.

~~(G)~~(I) The property owner must occupy the principal dwelling or Accessory Dwelling Unit as the owner's permanent residence.

(2) Donation and Collection Bin.

(A) A Donation and Collection Bin shall meet all required zoning district setbacks.

(B) A Donation and Collection Bin may be located in parking spaces as long as the required parking minimums are met.

(C) The maximum size for a Donation and Collection Bin is 40 square feet.

(D) The maximum height for a Donation and Collection Bin is 5 feet.

(3) Fuel Pumps.

(A) Any fuel pumps shall not be located within 150 feet of a residential district.

(4) Home Occupation.

(A) No person other than members of a family who reside in the residential dwelling shall be engaged in such occupation, profession, domestic craft, or economic enterprise.

~~(B)~~ The occupation, profession, domestic craft, or enterprise shall be conducted wholly within the residential dwelling and no accessory building shall be used in conjunction therewith unless specifically permitted by this subsection.

(B) Such use shall be and remain incidental and subordinate to the principal use of the residential dwelling as a family residence, and the area utilized for such occupation, profession, domestic craft, or economic enterprise shall never exceed 25% of the total floor area of the residential dwelling, excluding garages.

(i) The residential dwelling shall maintain its residential character and shall not be altered or remodeled in order to create any type of exterior commercial appeal.

(ii) No exterior storage of material, equipment, and/or supplies used in conjunction with such occupation, profession, domestic craft, or enterprise shall be placed, permitted, or allowed on the premises occupied by the residential dwelling.

(iii) The only equipment to be used in such occupation, profession, domestic craft, or enterprise shall be that which is ordinarily used in a private home in a like amount and kind.

(iv) A home occupation shall not generate such additional traffic as to create a traffic hazard or disturbance to nearby residents. Patrons and commercial vehicles shall be provided sufficient parking on the property.

~~(ii)~~(v) Outdoor activities are limited to a maximum of six (6) pupils per session and are restricted to swimming lessons, water safety instruction, horse riding lessons, yoga, or instructional activities associated with homeschooling.

(C) The home occupation shall not accept clients or customers before 7:00 a.m. or after 10:00 p.m. This limitation on hours of operation shall not apply to allowed childcare home occupations. Hours of operation shall be limited to 8:00 a.m. to 8:00 p.m. for outdoor activities.

~~(C)~~(D) Not more than one non-illuminated sign advertising the home occupation shall be allowed; said sign shall not be more than one square foot in area and shall be mounted on the building in which the home occupation is being conducted.

~~(D)~~(E) ~~The residential dwelling shall maintain its residential character and shall not be altered or remodeled in order to create any type of exterior commercial appeal.~~

~~(E) No exterior storage of material, equipment, and/or supplies used in conjunction with such occupation, profession, domestic craft, or enterprise shall be placed, permitted, or allowed on the premises occupied by the residential dwelling.~~

(F) No offensive noise, vibration, smoke, dust, odors, heat, or glare generated by or associated with the home occupation shall extend beyond the property line of the lot or tract on which the home occupation is being conducted.

~~(G) The occupation, profession, domestic craft, or enterprise shall be conducted wholly within the residential dwelling and no accessory building shall be used in conjunction therewith.~~

~~(H) The only equipment to be used in such occupation, profession, domestic craft, or enterprise shall be that which is ordinarily used in a private home in a like amount and kind.~~

Home business/occupation is an office use where the resident occupant conducts no business other than by telephone, mail, facsimile, or computer modem; where customers are not typically

THIS MAY NOT BE THE MOST RECENT COPY OF THE ADOPTED ZONING REGULATIONS OF GARDEN CITY, KS. PLEAES CONTACT NEIGHBORHOOD & DEVELOPMENT SERVICES AT 620-276-1170 WITH ANY QUESTIONS.

received on the premises; where no deliveries are accepted on a regular basis; and where an office is needed for the purpose of sending and receiving mail, telephone calls, maintaining records, and other similar functions. These uses may be operated in such a way the adjoining properties may or may not be aware of their existence due to noise, traffic, and machinery operation. These include, but are not limited to the following:

Artists, sculptors, authors, composers, Licensed Day Care, babysitting (maximum five (5) children being cared for), house-cleaners, homemade crafts for sale off-site (provided no machinery or equipment shall be used or employed, other than which would customarily be found on the home and be stored in garage, shed on the property or enclosed within a privacy fence on the property), telecommuters, telephone solicitor, tutoring (maximum five (5) students), office facility for a minister, rabbis, priest, salesman, sales representative, internet or manufacturer's representative provided that no direct sales are made in person on the premises, contractor's office, financial planning, music instruction (limited to one (1) student at a time except for occasional groups), pet grooming (maximum five (5) pets - no kennel or stables), single chair barber/beauty salon, or swimming pool cleaning.

26.030 ENFORCEMENT PROCEDURES. Any home business/occupation permitted by the City of Garden City under the zoning Use Permit provisions shall only be valid for the applicant, business/occupation and residence for which the permit is issued. A home business/occupation Zoning Use Permit shall be subject to cancellation in the event any non-compliance with or continued violation(s) of any provisions of this regulation by action of the Garden City Board of Zoning Appeals.

Home business/occupation applicants or operators shall agree to permit the Code Enforcement Officer to inspect the premises to determine compliance with the rules and regulations set forth herein.

Any aggrieved person believing that a violation or violations of this regulation is occurring and who desires that action be taken by the City shall notify the City Code Enforcement Officer in writing of such alleged violation(s). Within thirty (30) calendar days after receipt by the Code Enforcement Officer of such written allegation(s), the Code Enforcement Officer shall complete an investigation of the alleged allegation(s) to determine the merits thereof. Within ten (10) working days after the Code Enforcement Officer has completed the investigation, the following actions shall be taken:

(A) If the Code Enforcement Officer determines that no violation as alleged or otherwise is occurring, then notification of that decision shall be given to the complaining person or a spokesperson for the complaining party by first class mail.

(B) If the Code Enforcement Officer determines that a violation is occurring or has occurred as alleged, then notification of that decision and a time for compliance shall be sent by Certified Mail Return Requested to the violator and by first class mail to the complaining person or a spokesperson for the complaining party. The notification shall also state what action, if any, will be taken if compliance is not performed within thirty (30) calendar days.

(C) If compliance does not take place, or violations continue to occur the City shall

(D) 26.040. Reserved.

THIS MAY NOT BE THE MOST RECENT COPY OF THE ADOPTED ZONING REGULATIONS OF GARDEN CITY, KS. PLEAES CONTACT NEIGHBORHOOD & DEVELOPMENT SERVICES AT 620-276-1170 WITH ANY QUESTIONS.

(A) conduct a hearing before the Garden City Board of Zoning Appeals~~A home occupation shall not generate such additional traffic as to create a traffic hazard or disturbance to nearby residents.~~

(5) Outdoor Display.

(A) Outdoor Display shall be designated on an approved site plan.

(B) Outdoor Display is limited to 5% of the total lot area or 20% of the primary building's gross floor area, whichever is more restrictive.

(C) Outdoor Display shall be placed within 10 feet of the front facade of the primary building and shall not exceed 4 feet in height.

(D) Temporary storage of merchandise for display and sale placed on a sidewalk or other pedestrian area must maintain a 6-foot wide pedestrian path through and adjacent to the Outdoor Display area. The pedestrian path must be concrete or asphalt and may not be located within off-street parking areas, including parking spaces, fire lanes, easements, maneuvering aisles, customer pick-up lanes, and loading zones.

(6) Outdoor Storage.

(A) Outdoor Storage shall be designated on an approved site plan.

(B) Outdoor Storage shall not be placed:

(i) Within any required setbacks,

(ii) Within parking spaces, fire lanes, easements, maneuvering aisles, or loading areas,

(iii) On the roof of any structure,

(iv) To exceed the required screening height

(v) At the front of any primary building.

(C) Outdoor Storage is limited to 5% of the total lot area or 20% of the primary building's gross floor area, whichever is more restrictive.

(D) Outdoor Storage shall comply with Sec. 9.04.046.

(E) Outdoor Storage items shall be stored on a paved surface, and associated access and maneuvering drives shall be a paved surface, except for in the AG, I-1, and I-2 zoning districts where items, may be placed on a gravel surface or similar permeable surface.

(7) Service Bays.

(A) All service bays within 150 feet of a residential district shall face away from adjacent residential districts unless separated by a building or permanent architectural feature of minimum height matching the height of the service bays.

(B) Service bays shall orient away from street frontage.

(8) Swimming Pool, Private.

(A) A swimming pool shall be located ~~is~~ no closer than four feet from any property line.

(9) Wind Energy Conversion Systems.

(A) Purpose. In order to balance the need for clean, renewable energy resources with the protection of the health, safety, and welfare of the community, the purpose of this section is to regulate private use wind energy conversion systems for the production of electricity for use on a lot.

(B) Standards. All wind energy conversion systems are subject to and must comply with the following provisions:

(i) Setbacks. Minimum setbacks for wind turbines shall be:

a. A minimum of 1.1 times the total extended height of the wind turbine – as measured from the top of the foundation to the uppermost part of the wind turbine – from the project property lines.

b. Guy wire anchors may not extend closer than 10 feet from any property line.

(ii) Number per lot or parcel. A maximum of two wind turbines per lot or parcel is permitted on lots or parcels less than one-half acre in size; a maximum of four wind turbines per acre are permitted on lots or parcels at least one-half acre in size.

(iii) Height. Subject to the above-referenced setback requirements, the maximum total extended height of tower-mounted wind energy conversion systems – as measured from the top of the foundation to the uppermost part of the wind turbine – is 35 feet on parcels less than 5 acres in size and 70 feet on parcels 5 acres or greater. If roof-mounted, the extended height shall not exceed 10 feet above the roof ridge and in no case be higher than 35 feet.

(iv) Lighting. Wind system towers shall not be artificially lighted unless required, in writing, by the FAA or other applicable authority that regulates air safety. Where the FAA requires lighting, the lighting shall be the lowest intensity allowable under FAA regulations; the fixtures shall be shielded and directed to the greatest extent possible to minimize glare and visibility from the ground; and no strobe lighting shall be permitted, unless expressly required by the FAA.

(v) Access. All tower-mounted wind energy conversion systems must comply with the following provisions:

a. The tower shall be designed and installed so that there shall be no exterior step bolts or a ladder on the tower readily accessible to the public for a minimum height of 12 feet above the ground. For lattice or guyed towers, sheets of metal or wood or other barriers shall be fastened to the bottom tower section such that it cannot readily be climbed; and

b. All ground-mounted electrical and control equipment shall be labeled or secured to prevent unauthorized access.

(vi) Rotor safety. All wind turbines shall comply with the following rotor safety requirements.

a. Each wind turbine shall be equipped with both manual and automatic controls to limit the rotational speed of the blade within the design limits of the rotor. An external, manual shut-off switch shall be included with the installation.

b. The minimum distance between the ground and any protruding blades utilized on a private wind turbine shall be 10 feet, as measured at the lowest point of the arc of the blades.

c. All blades of a wind turbine are required to be within a shroud.

(vii) Noise. All wind turbines shall comply with these noise requirements and restrictions. These levels may not be exceeded at any time, including short-term events such as utility outages and severe wind storms. A manufacturer’s sound report shall be required with a building permit application.

a. No wind energy conversion system or combination of wind energy conversion systems on a single lot or parcel shall create noise that exceeds a maximum of 35 decibels (dBA) at any property line where the property on which the wind energy conversion system(s) is located or the abutting property is less than one acre; or, a maximum of 50 decibels (dBA) at any other property line. Measurement of sound levels shall not be adjusted for, or averaged with, non-operating periods.

b. Any wind energy conversion system(s) exceeding these levels shall immediately cease operation upon notification by the building official and may not resume operation until the noise levels have been reduced and verified by an independent third-party inspector, and/or approved by the building official, at the property owner's expense. Upon review and acceptance of the third-party noise level report, the building official will allow the operation of the affected wind energy conversion system(s). Wind energy conversion system(s) unable to comply with these noise level restrictions shall be shut down immediately and removed upon notification by the building official, after a period established by the building official.

(viii) Aesthetics and Maintenance.

a. Appearance. Unless subject to any applicable standards of the FAA, wind turbines shall be a non-obtrusive color such as tan, sand, gray, black, or similar colors. The painting or coating shall be kept in good repair for the life of the wind turbine. In addition, any changes to the approved color shall result in notification by the building official that the affected wind turbine(s) shall cease operation until a color correction has been made. If the affected wind turbine(s) are not repainted, using an approved color, within the period established by the building official, the owner shall remove the affected wind energy conversion system(s).

b. Electrical Wires. All electrical wires leading from the tower to electrical control facilities shall be located underground.

c. Maintenance. Wind turbines shall be maintained in good repair, as recommended by the manufacturer's scheduled maintenance or industry standards.

(ix) Signs. Only one sign is allowed on the wind turbine, and it shall not exceed one square foot in size.

(x) Compliance with FAA regulations. All wind turbines shall comply with applicable FAA regulations, including any necessary approvals for installations.

(xi) Certified Safe. A Texas professional engineer sealed drawing or statement shall accompany a building permit application confirming that the wind energy conversion system(s) has been designed and is planned to be constructed in accordance with accepted industry standards and certified safe.

(C) Repair and Removal of Wind Turbines.

(i) Any wind turbine found to be unsafe by the building official or fire department shall immediately cease operation upon notification by the building official or fire department and shall be repaired by the owner to meet federal, state, and local safety standards or be removed within six months. Wind turbines that are not operated for a continuous period of 12 months shall be removed by the owner of the wind turbine.

(ii) When a wind turbine is removed from a site, all associated and ancillary equipment, batteries, devices, structures, or support(s) for that system shall also be removed. For the purposes of this section, non-operation shall be deemed to include, but shall not be limited to, the blades of the wind turbine remaining stationary so that wind resources are not being converted into electric or mechanical energy, or the wind turbine is no longer connected to the public utility electricity distribution system.

(D) Mounting of Wind Turbines. Attachment of the wind turbine, including any support or structural components, to any building or structure shall be in strict compliance with

building codes and fire codes. Galvanized steel or metal is an acceptable system for the support structures.

(E) Compliance with Regulations.

(i) All wind energy conversion systems shall comply with applicable fire codes and building codes.

(ii) All standards and regulations under this subsection and other applicable fire and building codes are mandatory. Once wind turbines are permitted, the owners have the option of compliance with the standards or discontinuation of operations. If the operation of the wind turbine(s) does not comply with the provisions of this article, the operator shall promptly take all measures necessary to comply with these regulations, including, but not limited to, discontinued operation of one or more wind turbines.

Sec. 9.04.039. Temporary Uses and Structures

(a) Purpose. This section allows for the establishment of certain temporary uses of limited duration and special events, provided that such uses comply with the standards in this subsection and are discontinued upon the expiration of a set time period.

(b) Approval Procedure. Any use listed in this section may be permitted as a temporary use provided:

(1) Where indicated in Table 19: Use Table; and

(2) The proposed temporary use is consistent with the general and specific standards for temporary uses and structures in this section.

(c) General Standards for all Temporary Uses. All temporary uses or structures shall meet the following general requirements, unless otherwise specified in this Article:

(1) The temporary use or structure shall not be detrimental to property or improvements in the surrounding area, or to public health, safety, or general welfare.

(2) The temporary use shall comply with all applicable general and specific regulations of this Section, unless otherwise expressly stated.

(3) Permanent alterations to the site are prohibited.

(4) All temporary signs associated with the temporary use or structure shall be properly permitted and removed as required by the Anna Sign Code.

(5) Temporary permits for construction yards, field offices, and batching plants and specific use permits or variances regulating temporary buildings shall be issued for a period of time not to exceed 18 months. Temporary permits for Itinerant Vendors and Seasonal Roadside Stands shall be issued for a period of time not to exceed 3 months. Extensions may be granted by the City Council. Upon due notice and hearing before the City Council, any such permit may be revoked if the City Council finds the use of the building or structure is contrary to the intent of this article or results in increased noise, traffic, or other conditions considered to be a nuisance or hazard.

(6) The temporary use or structure shall not violate any applicable conditions of approval that apply to a principal use on the site.

(7) The temporary use regulations of this section do not exempt the applicant or operator from any other required permits, such as health or building permits.

(8) If the property is undeveloped, it shall contain sufficient land area to allow the temporary use or structure to occur, as well as any parking and traffic circulation as required that may be

associated with the temporary use, without disturbing sensitive or protected resources, including required buffers, 100-year floodplains, river protection setbacks, and required landscaping. At the conclusion of the temporary use or at the expiration of the permit, whichever occurs first, all disturbed areas of the site shall be restored or improved to the condition that existed prior to the use.

(9) If the property is developed, the temporary use shall be located in an area that is not actively used by an existing approved principal use, and that would support the proposed temporary use without encroaching or creating a negative impact on existing buffers, open space, landscaping, traffic movements, pedestrian circulation, or parking space availability.

(10) Tents and other temporary structures shall be located so as not to interfere with the normal operations of any permanent use located on the property, shall be anchored, and meet the requirements of the Director or Fire Marshal, including fire rating.

(11) Off-street parking shall be adequate to accommodate the proposed temporary use.

(d) Supplemental Standards for Temporary Uses.

(1) Itinerant Vendors.

(A) Itinerant Vendors shall comply with the regulations established in Article 5.06 (Itinerant Vendors).

Division 4. Development Standards

Sec. 9.04.040. Purpose

(a) Purpose. This Division establishes uniform standards for developing and improving property throughout Anna to ensure quality development consistent with the Comprehensive Plan.

(b) Organization. This Division is organized into nine (9) subsequent sections for each development standard. This Division regulates:

(1) Dimensional Regulations (Sec. 9.04.041)

(2) Site Design Requirements (Sec. 9.04.042)

(3) Parking (Sec. 9.04.043)

(4) Loading (Sec. 9.04.044)

(5) Landscaping (Sec. 9.04.045)

(6) Screening and Fencing (Sec. 9.04.046)

(7) Outdoor Lighting (Sec. 9.04.047)

(8) Trash (Sec. 9.04.048)

(9) Performance Standards (Sec. 9.04.049)

Sec. 9.04.041. Dimensional Regulations

(a) Purpose. This Section aims to establish the general rules and exceptions for required lots, yards, setbacks, height, and stepback requirements.

(b) Applicability. This Section applies to any lot, yard, setback, height, or stepback required by this Zoning Ordinance.

(c) Number of Buildings per Lot.

(1) Single-Family Detached and Attached and Two-Family Uses. Only one primary building for single-family or two-family uses with permitted accessory buildings is allowed on a lot or platted tract.

(2) Townhome Unit, Multifamily, Single-Unit or Duplex Unit Park, and Nonresidential Uses. Where a lot is used for townhome units, multifamily, nonresidential uses, or a combination of those uses, more than one primary building may be located upon the lot, but only when conforming to all the open space, parking, and density requirements applicable to the uses and districts.

(d) Lot Area and Dimensions.

(1) No lot shall be created or reduced in area, width, or depth below the minimum requirements established in Division 2.

(2) A lot that was legally created prior to the adoption of this Zoning Ordinance may be redeveloped, but any deviations from the dimensional standards other than minimum lot area shall require a Variance.

(e) Yard Regulations.

(1) Front Yard Regulations.

(A) A front yard is a yard across the full width of the lot extending from the front line of the primary building to the front property line.

(B) The front yard shall be open and unobstructed from a point 40 inches above the general ground level of the graded lot to the sky. Eaves and roof extensions or a porch may project into the required front yard for a distance not to exceed 4 feet and subsurface structures, platforms, or slabs may not project into the front yard to a height greater than 40 inches above the average grade of the yard. See Figure 3: Front Yard Regulations.

Figure 3: Front Yard Regulations

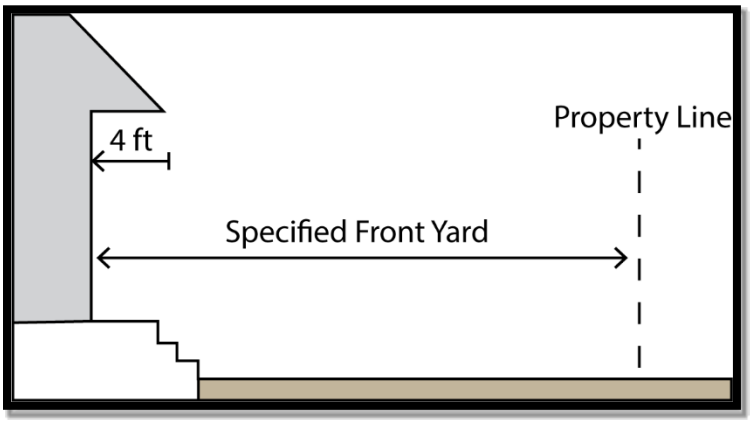

(C) Where a building line has been established by an approved plat that deviates from the setback that this Zoning Ordinance prescribes, the required front yard shall comply with the building line established by that plat.

(2) Side Yard Regulations.

(A) A side yard is between the primary building and the adjacent side property line, extending entirely from a front yard to the rear yard.

(B) On a corner lot, the street where the building's primary entrance is located, or designated to be located, is the front yard. Any streets perpendicular to the building's primary entrance are corner side yards.

(C) Every part of a required side yard shall be open and unobstructed except for the ordinary projections of window sills, belt courses, cornices, and other architectural features projecting not to exceed 12 inches into the required side yard and roof eaves projecting not to exceed 4 feet into the required side yard. A fence (in accordance with Sec. 9.04.046(d)) may be constructed on the property line adjacent to a side yard.

(D) Mechanical equipment such as air-conditioning compressors, swimming pool pumps and filters, and similar devices may be installed in the side yard at a maximum height of 60 inches above the ground level of the graded lot to the sky.

(E) Where a side property line divides a nonresidential district from a residential district, a minimum 10-foot side yard is required for the nonresidential lot side adjacent to that residential district.

(3) Rear Yard Regulations.

(A) A rear yard is a yard between the rear property line and the rear line of the primary building and the side property lines.

(B) Every part of a required rear yard shall be open and unobstructed to the sky from a point 40 inches above the ground level of the graded lot, except for permitted accessory buildings and the ordinary projections of window sills, belt courses, cornices, roof overhangs, and other architectural features projecting not to exceed 4 feet into the required rear yard. A fence (in accordance with Sec. 9.04.046(d) Fencing Standards.) may be constructed on the property line adjacent to a rear yard.

(f) Intersection Visibility Triangle.

(1) These provisions apply to all new development or proposed expansions into the intersection visibility triangle. However, these provisions do not apply to or otherwise interfere with the: placement and maintenance of traffic-control devices under governmental authority and control and public utilities; existing screening and fencing requirements; and existing and future City, state, and federal regulations.

(2) Obstructions are prohibited at elevations between two and one-half (2½) feet and nine (9) feet above the average street grade within the Intersection Visibility Triangle. Prohibited obstructions include any fence, wall, screen, billboard, sign, structure, foliage, or any other object.

(3) At intersections where arterials and collectors intersect at or near right angles, the Intersection Visibility Triangle shall be the area formed by extending the two curb lines from their point of intersection forty-five (45) feet along the curb and connecting these points with an imaginary line, creating a triangle. See Figure 4: 45' Intersection Point.

Figure 4: 45' Intersection Point

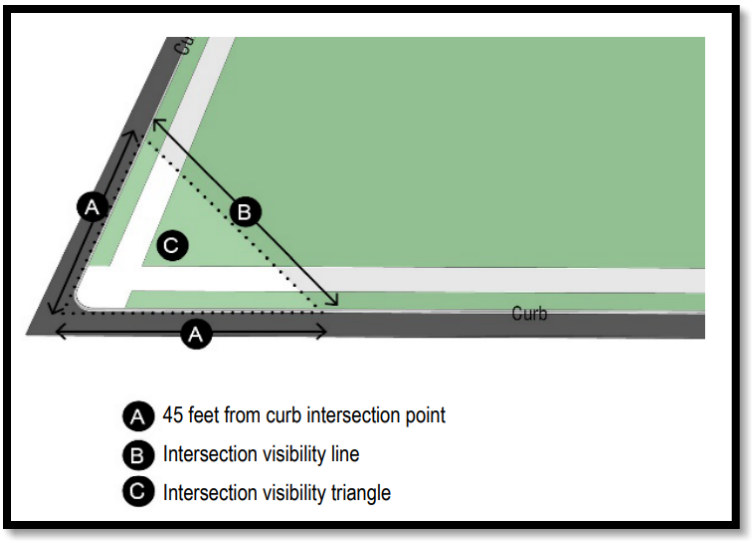

(4) At all intersections where local streets intersect at or near right angles, the Intersection Visibility Triangle shall be the area formed by extending the two curb lines from their point of intersection

thirty (30) feet along the curb and connecting these points with an imaginary line, creating a triangle. See Figure 5: 30' Intersection Point.

Figure 5: 30' Intersection Point

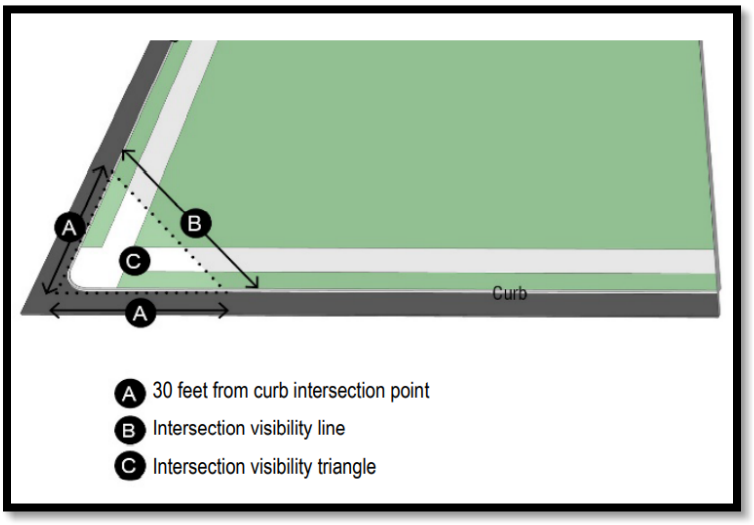

(5) If there are no curbs existing, the triangular area shall be formed by extending the property lines from their point of intersection twenty-five (25) feet on arterials and collectors and ten (10) feet on local streets, and connecting these points with an imaginary line, creating a triangle. See Figure 6: No Curbs Intersection Point.

Figure 6: No Curbs Intersection Point

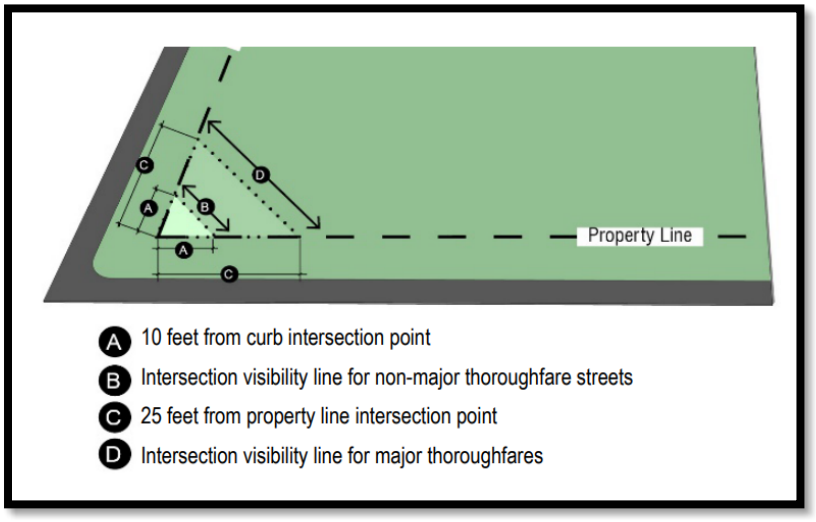

(6) At intersections where streets do not intersect at or near right angles, the Director shall have the authority to increase the minimum sight distances required above as they deem necessary to provide safety for both vehicular and pedestrian traffic.

(g) Height Regulations.

(1) A building or structure shall meet the requirements established in the Height definition (see Figure 18: Height Measurement).

(2) Church steeples, domes, spires, cooling towers, roof gables, chimneys, vent stacks, and athletic field equipment and fencing are exempt from maximum height provisions.

(h) Stepback Regulations.

(1) Stepback regulations apply to all new building construction and all additions with multiple stories and a height greater than 35 feet located adjacent to residential zoning districts and existing single-family uses but do not apply when an improved public street or railroad right-of-way separates the new building construction from the existing residential zoning district or single-family residential use.

(2) A 25-foot stepback applies for each additional story after the second story exceeding 35 feet in height (See Figure 7: Stepback Exhibit).

Figure 7: Stepback Exhibit

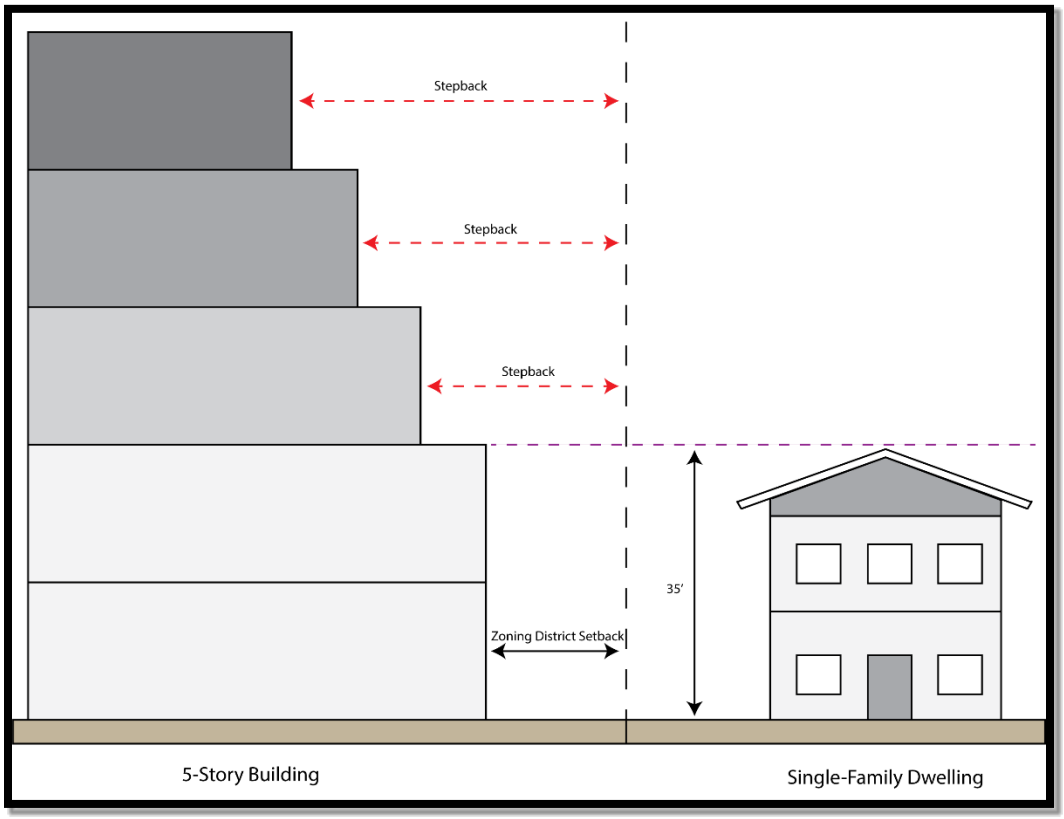

(3) Stepback regulations do not apply to the Downtown (DT) District to any nonresidential use and residential zoning district or use when separated by a public street.

(4) The ordinary projections of window sills, belt courses, cornices roof overhangs, balconies, rooftop patios, and other architectural features projecting not to exceed 4 feet into the required stepback unless granted by a specific use permit.

Sec. 9.04.042. Site Design Requirements

(a) Purpose. The purpose of this Section is to establish minimum standards for the appearance of development and corresponding site elements that are recognized as enhancing property values and that are in the interest of the general welfare of the City.

(b) Applicability. This section applies to all single-family, two-family, multifamily, mixed-use, and nonresidential developments for new construction. All development shall comply with the requirements established by the Anna Fire Marshal.

(c) Single-Family and Two-Family Residential Standards.

(1) Building Articulation. At least four facade articulation techniques are required on each single-family or two-family dwelling to add variety and interest to a building. The following features are acceptable techniques of exterior articulation.

(A) One of the following:

- A base course or plinth course;
- Banding, moldings, or stringcourses;
- Quoins;
- Oriels;
- Cornices;
- Arches;
- Balconies;
- Brackets;
- Shutters;
- Keystones;
- Dormers; or
- Louvers as part of the exterior wall construction. (Quoins and banding shall wrap around the corners of the structure for at least two feet.)

(B) Horizontal banding continues the length of the wall that faces a street or other similar highly visible areas.

(C) Front porch of at least 50 square feet.

(D) The installation of at least two (2) coach lights.

(E) Other techniques for building articulation can be substituted if approved by the Director.

(2) Roof Treatment. Except for porch roofs and shed roofs, pitched roofs shall have a minimum slope of 6" x 12" (six inches vertical rise for every 12 inches horizontal run) and shall have an overhang at least 1' (one foot) beyond the building wall. Porch roofs and shed roofs must have a minimum pitch of 4" x 12".

(3) Fenestration. Windowless exterior elevations that face a public right-of-way or other similar highly visible areas are prohibited. On two-story structures, windows are required on the first and second stories facing a public right-of-way.

(4) Garages. On front entry garages, the face of a garage shall not:

(A) Extend more than ten feet beyond the remainder of the front elevation of the primary living area of a dwelling; or

(B) Be over 60% of the total frontage width of a dwelling. Porches or columns are not considered part of the front elevation of the primary living area.

(5) House Repetition.

(A) Within residential developments, single-family and two-family dwellings with substantially identical exterior elevations can only repeat every four (4) lots when fronting the same right-of-way including both sides of the street.

(B) Homes side by side or across the street within one house (directly across the street or “caddy corner” across the street) shall not have substantially identical exterior elevations.

(d) Multifamily Residential Standards.

(1) Building Articulation.

(A) Horizontal wall planes longer than 40 feet in length shall be segmented into smaller sections by a structural or ornamental minor facade offset (recess or projection) of a minimum 4 feet deep and 8 feet wide.

(B) The height of those offsets is equal to the building's height at the location of the offset.

(2) Roof Treatment.

(A) Pitched or flat roofs are permitted.

(B) A parapet wall is allowed if constructed to prevent flat roof visibility.

(3) Fenestration.

(A) Any glass with a visible light reflectance rating of 25% or greater is prohibited.

(4) Elements. A multifamily development is required to provide at least two of the following elements:

(A) At least one dormer is provided for each roof plane over 1,000 square feet in area that faces a street. The dormer must be appropriately scaled for the roof plane and shall not be wider than the windows on the building elevation;

(B) All windows feature shutters. The shutters provided must be operational or appear operational and must be in scale with the corresponding window;

(C) All windows are emphasized through the use of molding around the windows, plant ledges, sills, shaped frames, awnings, or another similarly related architectural element;

(D) Downspouts associated with gutters are internally incorporated into the building's construction rather than attached to the building after the construction of the facade is complete.

(E) Other similar architectural features as approved by the Director.

(5) Amenities.

(A) A multifamily development shall provide the required amount of amenities prescribed in Table 22: Required Amenities.

Table 22: Required Amenities

Number of Units	Required Amenities
1 – 10	None
11 – 50	1
51 – 100	2
101 – 200	3
201 – 300	4
301 +	5

(B) The amenities below may be used to fulfill the requirements of Table 22: Required Amenities. Each amenity counts as one required amenity towards the requirements in Table 22: Required Amenities. However, multiples of the same amenity do not count towards the requirements in Table 22: Required Amenities. Additionally, to provide flexibility in development design, the Director may approve different amenities that agree with the purpose of this Sec. 9.04.042.

(i) Swimming pool (minimum 1,000 square foot surface area) with cooling deck (minimum ten feet wide in all areas);

(ii) Jacuzzi or hot tub area (minimum 50 square foot area);

(iii) At least four barbeque grills or one grill per 100 units, whichever is greater, with shaded seating areas, all barbeque grills shall be:

a. Serviced with propane or other gas, and

b. Be built into a structure incorporated into an adjacent amenity (i.e., pool or seating area) ;

(iv) Ramada(s), arbor(s), and/or trellis(es) covering at least 1,000 square feet of recreation space;

(v) Child play lot (minimum 3,000 square foot area) with equipment specifically designed to meet the following three age cohorts: 0-2 years old, 2-5 years old, and 5-12 years old;

(vi) A splash pad (water play amenity for children) that is a minimum of 1,000 square feet in area;

(vii) A dog park that is at least 5,000 square feet in area that:

a. Is enclosed by a minimum five-foot tall vinyl-coated chain link fence;

b. Uses grass, wood chips, or a combination of the two as surface materials; and

c. Provides at least one dog waste station that includes a bag dispenser and waste receptacle installed along the perimeter of the enclosure for every 2,500 square feet of the associated dog park.

(viii) Regulation-size volleyball, basketball, tennis, or other similarly related playing court.

(ix) Golf putting green (minimum 1,000 square feet);

(x) Fitness center/weight room (minimum 500 square feet);

(xi) Business center (minimum 500 square feet);

(xii) Media room (minimum 500 square feet).

(e) Townhome Unit and Single-Unit or Duplex Unit Park Standards.

(1) Building Articulation. At least two facade articulation techniques are required on each detached or attached residential dwelling unit to add variety and interest to a building. The following features are acceptable techniques of exterior articulation.

(A) One of the following:

- A base course or plinth course;
- Banding, moldings, or stringcourses;
- Quoins;
- Oriels;
- Cornices;
- Arches;
- Balconies;
- Brackets;
- Shutters;
- Keystones;
- Dormers; or
- Louvers as part of the exterior wall construction. (Quoins and banding shall wrap around the corners of the structure for at least two feet.)

(B) Horizontal banding continuing the length of the wall that faces a street, or other similar highly visible areas.

(C) Front porch of at least 50 square feet.

(D) The installation of at least two (2) coach lights.

(E) Other techniques for building articulation can be substituted if approved by the Director.

(2) Roof Treatment. Except for porch roofs and shed roofs, pitched roofs shall have a minimum slope of 6" x 12" (six inches vertical rise for every 12 inches horizontal run) and shall have an overhang at least 1' (one foot) beyond the building wall. Porch roofs and shed roofs must have a minimum pitch of 4" x 12".

(3) Fenestration. Windowless exterior elevations facing a public right-of-way or other highly visible areas are prohibited. On two-story structures, windows are required on the first and second stories facing a public right-of-way.

(4) Garages. On front entry garages, the face of a garage shall not:

(A) Extend more than ten feet beyond the remainder of the front elevation of the primary living area of a detached residential dwelling unit; or

(B) Consider porches or columns as part of the front elevation of the primary living area.

(5) Unit Repetition.

(A) Dwelling units with substantially identical exterior elevations can only repeat every four (4) units when fronting the same right-of-way, fire lane, or easement, including both sides of that right-of-way, fire lane, or easement.

(B) Dwelling units side by side or across each other within one unit (directly across or "caddy corner") shall not have substantially identical exterior elevations.

(6) Amenities.

(A) A Townhome Unit or Single-Unit or Duplex Unit Park shall provide the required amount of amenities prescribed in Table 23: Required Amenities.

Table 23: Required Amenities

Number of Detached Residential Dwelling Units	Required Amenities
1 – 10	None
11 – 50	1
51 – 100	2
101 – 200	3
201 – 300	4
301 +	5

(B) The amenities below may be used to fulfill the requirements of Table 23: Required Amenities. Each amenity counts as one required amenity towards the requirements in Table 23: Required Amenities. However, multiples of the same amenity do not count towards the requirements in Table 23: Required Amenities. Additionally, to provide flexibility in development design, the Director may approve different amenities that agree with the purpose of this Sec. 9.04.042.

(i) Swimming pool (minimum 1,000 square foot surface area) with cooling deck (minimum ten feet wide in all areas);

(ii) Jacuzzi or hot tub area (minimum 50 square foot area);

(iii) At least four barbeque grills or one grill per 100 units, whichever is greater, with shaded seating areas, all barbeque grills shall be:

a. Serviced with propane or other gas, and

b. Be built into a structure incorporated into an adjacent amenity (i.e., pool or seating area)

(iv) Ramada(s), arbor(s), and/or trellis(es) covering at least 1,000 square feet of recreation space;

(v) Child play lot (minimum 3,000 square foot area) with equipment specifically designed to meet the following three age cohorts: 0-2 years old, 2-5 years old, and 5-12 years old;

(vi) A splash pad (water play amenity for children) that is a minimum of 1,000 square feet in area;

(vii) A dog park that is at least 5,000 square feet in area that:

a. Is enclosed by a minimum five-foot tall vinyl-coated chain link fence;

b. Uses grass, wood chips, or a combination of the two as surface materials; and

c. Provides at least one dog waste station that includes a bag dispenser and waste receptacle installed along the perimeter of the enclosure for every 2,500 square feet of the associated dog park.

(viii) Regulation-size volleyball, basketball, tennis, or other similarly related playing court.

(ix) Golf putting green (minimum 1,000 square feet);

(x) Fitness center/weight room (minimum 500 square feet);

(xi) Business center (minimum 500 square feet);

(xii) Media room (minimum 500 square feet).

(f) Nonresidential Standards.

(1) Building Articulation.

(A) All buildings shall utilize facade offsets and appropriate fenestration to add variation and visual interest to an elevation and to break up long uninterrupted walls or elevations.

(B) Elevations that are 50 feet or longer in horizontal length require at least two offsets (projection or recess) from the primary facade plane of at least 18 inches deep and 4 feet wide.

(C) The height of those offsets is equal to the building's height at the location of the offset.

(2) Roof Treatment.

(A) Long uninterrupted roof lines and planes shall be broken into smaller segments through the use of scaled gables or dormers, changes in height, changes in roof form, type or planes that typically correspond to offsets in the building's facade, or other appropriate architectural elements.

(B) Parapet roof lines shall feature a well-defined cornice treatment or another similar element to visually cap each building elevation.

(3) Fenestration.

(A) The use of recessed windows, awnings, sills, drip caps, projecting trim casings or surrounds, projecting muntins or mullions, and other elements is required.

(B) Any glass with a visible light reflectance rating of 25% or greater is prohibited.

(4) Elements. All buildings or developments shall be required to provide at least two of the following elements:

(A) The primary entrance for all buildings shall feature a protected entry through the use of a recessed entry, porte-cochere, awning, canopy, or similar feature that serves the same purpose. The covering shall be at least three feet in depth when measured from the face of the adjoining facade.

(B) All building elevations shall feature at least two facade offsets (recess or projection) of at least five feet in depth for every 50 feet of horizontal length.

(C) All building elevations shall feature at least three distinct roof lines.

(D) All primary and secondary building entrances, excluding emergency exits and service doors, feature a recessed entry, canopy, awning, or similar sheltering feature of at least 50 square feet.

(g) Mixed-Use Standards.

(1) Building Articulation.

(A) All buildings shall utilize facade offsets and appropriate fenestration to add variation and visual interest to an elevation and to break up long uninterrupted walls or elevations.

(B) Elevations 50 feet or longer in horizontal length require at least two offsets (projection or recess) from the primary facade plane of at least 18 inches deep and 4 feet wide.

(C) The height of those offsets is equal to the building's height at the location of the offset.

(D) Columns and piers shall be spaced no farther apart than the height of the column or pier.

(2) Roof Treatment.

(A) Long uninterrupted roof lines and planes shall be broken into smaller segments through the use of scaled gables or dormers, changes in height, changes in roof form, type or planes that typically correspond to offsets in the building's facade, or other appropriate architectural elements.

(B) Parapet roof lines shall feature a well-defined cornice treatment or another similar element to visually cap each building elevation.

(C) Mansard roofs are prohibited.

(3) Fenestration.

(A) The use of recessed windows, awnings, sills, drip caps, projecting trim casings or surrounds, projecting muntins or mullions, and other elements is required.

(B) Any glass with a visible light reflectance rating of 25% or greater is prohibited.

(4) Ground Floor.

(A) A mixed-use ~~development~~building's ground or first floor is reserved for commercial uses, such as retail, office, and restaurant uses.

(B) For those mixed-use ~~developments~~ buildings incorporating live-work units, the first floor may be shared with residential and commercial uses.

(C) The ground floor shall have a minimum ceiling height of 14 feet.

(5) Elements. All buildings or developments shall be required to provide at least two of the following elements:

(A) The primary entrance for all buildings shall feature a protected entry through the use of a recessed entry, porte-cochere, awning, canopy, or similar feature that serves the same purpose. The covering shall be at least three feet in depth when measured from the face of the adjoining facade.

(B) All building elevations shall feature at least two facade offsets (recess or projection) of at least five feet in depth for every 50 feet of horizontal length.

(C) All building elevations shall feature at least three distinct roof lines.

(D) All primary and secondary building entrances, excluding emergency exits and service doors, feature a recessed entry, canopy, awning, or similar sheltering feature of at least 50 square feet.

(E) Other similar architectural features as approved by the Director.

(6) Amenities.

(A) A mixed-use ~~development~~ building shall provide a minimum of two amenities.

(B) The amenities below may be used to fulfill the requirements. Each amenity counts as one required amenity towards the requirements; however, multiples of the same amenity do not count towards the requirements. Additionally, to provide flexibility in development design, the Director may approve different amenities that agree with the purpose of this Sec. 9.04.042.

(i) Swimming pool (minimum 850 square foot surface area) with cooling deck (minimum ten feet wide in all areas);

(ii) Jacuzzi or hot tub area (minimum 50 square foot area);

(iii) At least two barbeque grills or one grill per 100 units, whichever is greater, with shaded seating areas, all barbeque grills shall be:

a. Serviced with propane or other gas, and

b. Be built into a structure incorporated into an adjacent amenity (i.e., pool or seating area)

(iv) Ramada(s), arbor(s), and/or trellis(es) covering at least 1,000 square feet of recreation space;

(v) A dog park that is at least 5,000 square feet in area that:

a. Is enclosed by a minimum five-foot tall vinyl-coated chain link fence;

b. Uses grass, wood chips, or a combination of the two as surface materials; and

c. Provides at least one dog waste station that includes a bag dispenser and waste receptacle installed along the perimeter of the enclosure for every 2,500 square feet of the associated dog park.

(vi) Fitness center/weight room (minimum 500 square feet);

(vii) Business center (minimum 500 square feet);

(viii) Media room (minimum 500 square feet).

Sec. 9.04.043. Parking

(a) Purpose. The purposes of this Section are to:

(1) Ensure that adequate off-street parking is provided for new land uses and changes in use;

(2) Minimize the negative environmental and development design impacts that can result from excessive parking, driveways, and drive aisles within parking areas;

(3) Establish standards and regulations for safe and well-designed parking and vehicle circulation areas that minimize conflicts between pedestrians and vehicles within parking areas and surrounding land uses;

(4) To regulate residential off-street parking and to specify the requirements for residential off-street parking as they pertain to the appearance and the health, safety, and welfare of the City;

(5) Offer flexible means of minimizing the amount of area devoted to vehicle parking by allowing reductions in the number of required spaces in context-sensitive locations;

(6) Ensure compliance with provisions of the Americans with Disabilities Act (ADA);

(7) Minimize the visual impact of off-street parking areas; and

(8) Ensure that adequate off-street bicycle parking facilities are provided in walkable areas and promote parking that offers safe and attractive pedestrian routes.

(b) Applicability.

(1) Any new building, structure, use, redeveloped site, or enlarged or expanded existing building or use, must meet this section's parking requirements. These developments require permanent parking and off-street loading. Parking spaces may be provided in a garage or surfaced open area.

(2) When a change in the intensity of use of any building or structure would increase the required parking by more than five (5) spaces or ten (10%) percent, whichever is greater, through addition or change in the number of dwelling units, gross floor area, or other specified units of measurements, the increment of additional required parking is provided in accordance with this section unless an adjustment is permitted in (g) below. If less than five (5) spaces or ten (10%) percent, whichever is greater, are required by a change or series of changes in use, the Director may waive up to the incremental required number of parking spaces after determining that the granting of the waiver will not be detrimental to the public welfare and will be consistent with the Comprehensive Plan.

(c) Compliance Required.

(1) Off-Street Parking and Loading Review. Each application for a site plan, building permit, or certificate of occupancy shall include information as to the location and dimensions of parking spaces, and the means of ingress and egress to those spaces. This information is in sufficient detail to determine the requirements of this Zoning Ordinance are met and shall contain necessary information required by applicable provisions of this Zoning Ordinance.

(2) ADA Compliance. All ADA parking spaces and related ADA accessibility features are required to be installed in accordance with the current edition of the ADA Standards for Accessible Design (the "ADA Standards") as published by the Department of Justice. Where discrepancies exist

between this Zoning Ordinance and the ADA Standards, the ADA Standards shall apply. All required parking shall meet the ADA Standards.

(3) Parking Reduction Procedures. No existing or proposed parking shall be reduced or eliminated unless otherwise specified. Reductions in parking spaces may be permitted where spaces are no longer required by these regulations or alternative spaces meeting the requirements of these regulations are provided.

(d) Off-Street Parking Requirements. Minimum off-street parking shall follow the requirements established in Table 19: Use Table.

(e) Metrics and Interpretations for Computation.

(1) Square Footage (Floor Area). The total or gross building square footage.

(2) Fraction of a Space. When the calculation of the number of required parking and loading spaces results in a requirement of a fractional space, any fraction is interpreted as one (1) whole parking or loading space.

(3) Parking Specific Variables.

(A) Square Footage.

(i) Example: 1/1,000 sf

(ii) Interpretation: 1 parking space for every 1,000 square feet of the building's floor area

(B) Dwelling Unit.

(i) Example: 1/DU

(ii) Interpretation: 1 parking space for each dwelling unit

(C) Bedroom(s)/Guestroom(s).

(i) Example: 1 + (0.75) bedrooms

(ii) Interpretation: 1 parking space plus the number of parking spaces from calculating 0.75 times all bedrooms.

(D) Bedroom Unit.

(i) Example: 1.5/1 BRU

(ii) Interpretation: 1.5 parking spaces for a single-bedroom apartment unit

(E) Acres.

(i) Example: 1/5 acres

(ii) Interpretation: 1 parking space for every 5 acres

(f) Additional Rules for Computing Parking Requirements.

(1) Uses Not Listed. The Director shall have the authority to determine the required parking and loading facilities for uses not specifically listed in the tables established in this section. This determination by the Director is in writing and is appealable to the City Council.

(2) Cumulative Parking. In computing the parking requirements for any development, the total parking requirements shall be the sum of the specific parking space requirements for each use included in the development except as provided in Joint Parking Facilities. Where multiple uses are proposed for a building, the parking requirements shall be calculated on the basis of the most

restrictive requirements unless specific areas of different uses are delineated by floor or building segment.

(3) Accessory Uses. Areas accessory to the principal use of a building, or portion of a building, are to be included in the calculation of floor area of the principal use, unless noted otherwise.

(4) Alterations, Expansions, and Changes in Use. For alterations, expansions, or changes in uses, prior to a certificate of occupancy, the Director shall determine in writing, based on information submitted by the applicant, the impact of the proposed change on the parking requirement for the building and the adequacy of the parking provided.

(g) Adjustments and Reductions to Parking Requirements.

(1) Generally.

(A) In specific instances established below, the Director or City Council may approve a reduction in required parking spaces. Applications for a reduction shall include the following information:

(i) A parking study that substantiates the need for a reduced number of spaces, and

(ii) A plan showing how the parking spaces are provided on the site.

(B) Multiple parking adjustments and reductions may be used.

(C) The maximum required parking reduction shall not total more than 35% unless specifically authorized in this Section.

(2) Adjustments and Reductions by the Director.

(A) Joint Parking Facilities. With the approval of a site plan, off-street parking facilities for different buildings, structures, or uses, or for mixed uses, may be provided and used collectively or jointly in any zoning district in which separate off-street parking facilities for each constituent use would be permitted, subject to the following provisions below.

(i) A legally sufficient written agreement assuring the perpetual joint usage of the common parking for the combination of uses or buildings is properly drawn and executed by the parties concerned, approved as to form and execution by the City Attorney, and filed with and made part of the application for a Building Permit.

(ii) Up to 60% of the parking spaces required for a theater or other place of evening entertainment, or for a religious facility, may be provided and used jointly by banks, offices, and similar uses not normally open, used, or operated during evening hours if specifically approved by the Planning and Zoning Commission. The City Council may rescind such approval.

(iii) Additional parking shall be obtained by the owners if the City Council determines that such joint use results in a public nuisance by providing an inadequate number of parking spaces or otherwise adversely affecting the public health, safety, or welfare.

(B) Captive Market. Parking requirements for retail and restaurant uses may be reduced up to 25% where it can be determined that some portion of the patronage of these businesses comes from other uses (i.e., employees of area offices patronizing restaurants) located within the same building or a maximum walking distance of five hundred (500) feet.

(C) Availability of Public Parking. Parking requirements may be reduced by 20% if a property has available to it a sufficient supply of existing underutilized public parking spaces in both off-

street public parking lots or on-street public parking spaces. Parking must be within a maximum walking distance of five hundred (500) feet from the proposed use.

(D) Mixed-Use (MU) District Parking. Any new development in the Mixed-Use (MU) District may apply a ~~15~~50% reduction to the required parking ratio established in Table 19: Use Table for that particular use excluding residential uses.

(E) Downtown (DT) District Parking. Any new development in the Downtown (DT) District may apply a ~~25~~75% reduction to the required parking ratio established in Table 19: Use Table for that particular use excluding residential uses. A mixed-use building or multifamily use may apply a 25% reduction to the required parking ratio within the Downtown (DT) District.

(F) Required parking for a restaurant with drive-through service and no dine-in seating and carryout orders may be reduced as long as three parking spaces or more parking spaces are provided.

(G) Drone Delivery Hub. The required number of spaces may be reduced up to 15% to accommodate drone delivery infrastructure.

(H) Drone Delivery Pick-Up Kiosk. The required number of spaces may be reduced up to two (2) spaces per Drone Delivery Pick-Up Kiosk in the following circumstances:

(i) Individually platted and stand-alone restaurants or retail buildings that require 20 or more off-street parking spaces.

(ii) Multi-tenant buildings or multiple buildings on one lot that require 30 or more total off-street parking spaces.

(iii) Industrial uses with 10 or more required off-street parking spaces.

(3) Adjustments and Reductions by the City Council.

(A) The City Council may reduce the parking requirements in Sec. 9.04.043(g)(2)(C) by 35%.

(B) The City Council may reduce parking if the applicant can clearly demonstrate that the required parking provisions create unnecessary hardship due to the particular nature or conditions of the proposed use.

(h) Design.

(1) All required parking spaces shall be located on the premises of the use to which that requirement applies or within an off-street space distance no more than 500 feet from the premises.

(2) The surface of parking spaces and aisles, truck standing spaces, and access driveways shall be treated, prepared, and maintained for adequate drainage and the elimination of dust, dirt, and mud.

(3) The minimum parking space, drive aisle dimensions, and any other associated standards shall meet the requirements and specifications established in Article 9.03 (Design Standards).

(4) Stacking.

(A) A stacking space shall be an area on a site measuring 9 feet by 20 feet with direct forward access to a service window or station of a drive-through facility which does not constitute space for any other circulation driveway, parking space, or maneuvering area. An escape lane shall be an area measuring a minimum of 11 feet wide that provides access around the drive-through facility. An escape lane may be part of a circulation aisle.

(B) For drive-through restaurants, the minimum stacking space for the first vehicle stop (point of order) shall be 100 feet and 40 feet thereafter for any other stops. An escape lane shall be provided parallel to the drive-through lane from the beginning of the drive-through lane to the pick-up window.

(C) For dry cleaners, banks and financial services, pharmacies, and other retail uses with drive-through facilities, a minimum of 5 total stacking spaces shall be required if one or 2 drive through lanes are provided. For 3 or more drive through lanes, a minimum of 4 total stacking spaces shall be required. An escape lane shall be provided in all instances.

(D) For unmanned kiosks, a minimum of one stacking space for each service window shall be provided.

(i) Residential Off-Street Parking.

(1) No person shall park any automobile, bus, truck, motorcycle, or any vehicle on any portion of a front yard or side yard of any area that is zoned SF-20.0, SF-14.5, SF-12.0, SF-10.5, SF-8.4, SF-7.2, SF-6.0, MD, MF, unless that area is a:

(A) Hard-surfaced driveway or parking area;

(B) Gravel driveway bordered by cement curbing or similar permanent border;

(C) Required driveway that provides access to a garage, carport, or off-street parking area required by this Section; and

(D) Side yard that is enclosed by a screening fence at least six feet in height and so constructed that no person can see through into the area surrounded by the fence.

(2) All residential driveways and any other associated standards shall meet the requirements and specifications established in Article 9.03 (Design Standards).

(j) Parking and Storage for Major Recreational Equipment and Vehicles.

(1) No Major Recreational Equipment shall be parked or stored on any lot in a residential district except in a carport or enclosed building, on a driveway, or in a required side or rear yard; provided, however, that such equipment may be parked anywhere on a residential premises no more than 24 hours during loading or unloading.

(2) No Major Recreational Equipment shall be used for living, sleeping, or housekeeping purposes when parked or stored on a residential lot, except for the temporary housing of guests not to exceed 14 consecutive calendar days within a 30-day period.

Sec. 9.04.044. Loading

(a) Purpose. The purposes of this Section are to:

(1) Ensure that adequate loading facilities are provided for new land uses;

(2) Establish standards and regulations for safe and well-designed loading and unloading to minimize conflicts between pedestrians and vehicles within parking areas and surrounding land uses;

(3) Minimize the impact of improperly planned loading areas.

(b) Applicability.

(1) Generally. Any new building, structure, use, redeveloped site, or enlarged or expanded existing building or use must meet this section's requirements unless specifically exempted.

(2) Exemptions. These requirements do not apply to residential, accessory, and temporary uses.

(c) Generally. The required number of off-street loading spaces is determined by gross floor area. Outdoor storage, sales, or display areas must be added to the gross floor area if these areas contain materials that are received or distributed by trucks (Display areas for an Auto Dealership are excluded from this calculation). If a development has more than two uses, the off-street loading space requirement is the highest number of spaces required by a single use. Required loading spaces follow the standards prescribed in Table 24: Required Loading.

Table 24: Required Loading

Building Square Footage	Loading Spaces Required
0 – 10,000	0
10,001 – 50,000	1
50,001 – 100,000	2
100,001 – 200,000	3
Each additional 100,000	1 additional

(d) Standards.

(1) Location. A loading space:

(A) Must be located within the same development as the building or use served;

(B) Is prohibited from projecting into a sidewalk, street, or public right-of-way, including any maneuvering area;

(C) Is prohibited from being located between the front building line and the lot line;

(D) Must be placed to the rear or side of buildings in visually unobtrusive locations;

(E) Must be set back a minimum distance of 100 feet from any adjacent residential zoning district or use;

(F) Must be set back a minimum distance of 50 feet from any public street or front property line. Downtown and Mixed-Use Districts are exempt from this distance separation.; and

(G) Must be oriented away from the street frontage.

(2) Dimensions. The minimum loading space size is 35 feet in length, 12 feet in width, and 15 feet in height.

(3) Maneuvering. The size of delivery vehicles intending to serve the site determines maneuvering area size. Each maneuvering area for loading spaces must not conflict with parking spaces or with

the maneuvering areas for spaces. A maneuvering area must be located on-site and be a minimum of 40 feet for spaces serving delivery vehicles.

(4) Design. Each loading space must minimize conflicts with other vehicular, bicycle, and pedestrian traffic.

(A) Loading facilities must maintain a 50-foot minimum distance from any residential property unless completely enclosed by building walls, a uniformly solid wall, or a combination of the two.

(B) Landscaping and Screening and Fencing prescribed in Sec. 9.04.045 and Sec. 9.04.046 apply to loading facilities and shall prevent direct views of the loading facilities and their driveways from adjacent properties and public right-of-way.

(C) Loading docks for any use adjacent to a residential use or district shall be designed and constructed to enclose the loading operation on three sides to reduce noise, with the open end directed away from residential property.

(e) Loading and Unloading of Children. To ensure the safety of children entering and exiting day care centers or other places where loading and unloading to automobiles and/or buses occurs, the following regulations shall apply.

(1) Designated loading/unloading spaces. Schools, daycare centers, and similar child training and care establishments shall provide loading and unloading parking spaces as close to the establishment's front door as is practical. These spaces shall be located on an internal drive that does not block the fire lane or other businesses' vehicular movement and shall be stained, painted, or stamped so that the area is easily identified.

(2) Drop-off lane. Kindergartens, elementary schools, day schools, and similar child training and care facilities shall provide a separate, concrete-paved loading and unloading lane area adjacent to an entrance that allows drivers to approach the entrance and, without exiting the vehicle, the staff will assist in loading and unloading of the children in and out of the vehicle. This drop-off lane shall be one-way and with sufficient stopping points to allow a minimum of two cars to unload simultaneously. In addition, the drop-off lane shall be constructed to allow vehicles to exit the lane without impeding the movement of other vehicles using other drive aisles or causing a safety hazard with parents and/or children entering or exiting the building.

Sec. 9.04.045. Landscaping

(a) Purpose. The purpose of this section is to preserve the City's unique character and integrate and enhance new development by promoting landscape design that:

(1) Reinforces the identity of the community;

(2) Appropriately situates new buildings in the landscape;

(3) Provides adequate vegetation for screening and buffering between land uses;

(4) Provides tree canopies to reduce urban heat island effect;

(5) Preserves existing trees and establishes procedures for replacing removed trees;

(6) Balances water demand and use;

(7) Identifies climate-appropriate landscape material; and

(8) Protects Anna's natural resources.

(b) Applicability. This section applies to:

(1) All nonresidential, multifamily, and mixed-use ~~developments~~ buildings for new construction unless otherwise specified;

(2) Residential development in certain instances as specified and provided in this Section;

(3) Any existing nonresidential, multifamily, or mixed-use ~~development~~ building that is altered by increasing the floor area by 30% or more of the originally approved floor area, either by a single expansion or by the cumulative effect of a series of expansions;

(4) Any change in use requiring the expansion of or significant improvements to meet parking standards shall upgrade landscaping on the site and meet this Section's requirements. If the standards cannot be met, then a variance may be requested.

(c) Landscape Plan Required.

(1) A landscape plan is required and shall be shown as part of the site plan.

(2) No permits shall be issued for building, paving, grading, or construction until a landscape plan is approved. Before issuing a certificate of occupancy for any building or structure, all screening and landscaping shall be in place per the landscape plan.

(3) If a certificate of occupancy is sought at a season of the year in which the Director determines that it would be impractical to plant trees, shrubs, or grass, or to lay turf, a temporary certificate of occupancy may be issued if a letter of agreement from the property owner is provided stating when the installation shall occur. All landscaping required by the landscape plan shall be installed within six months of the date of issuance of the temporary certificate of occupancy or the site shall be deemed to be in violation of this section and the temporary certificate of occupancy shall be revoked.

(d) General Landscape Standards. The following criteria and standards shall apply to landscape materials and installation:

(1) Required landscaped open areas shall be completely covered with living plant material unless approved xeriscape planting materials are used. All required landscaped open areas using

xeriscape planting materials shall provide 50% of living plant material. Nonliving landscaping materials such as wood chips and gravel may be used only under trees, shrubs, and other plants.

(2) Plant materials shall conform to the standards of the approved plant list for the City (see approved plant list). Grass seed, sod, and other material shall be clean and reasonably free of weeds and noxious pests and insects.

(3) Required plant materials are classified as:

(A) Canopy trees,

(B) Ornamental trees,

(C) Shrubs,

(D) Hedges,

(E) Vines, and

(F) Grasses and Ground Covers.

(4) Required plant materials shall follow the requirements established in Table 25: Planting Requirements.

Table 25: Planting Requirements

Plant Material Type	Maturity Crown Spread	Minimum Requirements at Time of Planting	
		Caliper at DBH	Height
Canopy Tree	25 ft	~~3~~ 4 inches	~~7~~ 8 ft
Ornamental Tree*	15 ft	~~1~~ 2 inch	5 ft
Shrubs**	N/A	N/A	~~2~~ 3 ft
Notes	*Ornamental trees having a minimum mature crown of less than 15 feet may be substituted by grouping the same so as to create the equivalent of 15 feet of crown width. **Shrubs shall be planted no further apart than three feet on center.		

(5) Hedges, where installed for buffering purposes required by this Section, shall be planted and maintained so as to form a continuous, unbroken, solid visual screen that will be three feet high within two years after the time of planting.

(6) Landscaping, except required grass and low ground cover, shall not be located closer than 3 feet from the edge of any parking space.

(7) Evergreen vines not intended as ground cover shall be a minimum of two feet in height immediately after planting and may be used in conjunction with fences, screening devices, or walls to meet landscape screening and buffering requirements.

(8) Grass areas shall be sodded, plugged, sprigged, hydro-mulched, or seeded, except that solid sod shall be used in swales, or when necessary to prevent erosion. Grass areas shall be established with complete coverage within a six-month period of time from planting and shall be re-established, if necessary, to ensure grass coverage of all areas.

(9) Ground covers used in lieu of grass shall be planted in such a manner as to present a finished appearance and reasonably completed coverage within one year of planting.

(10) All required landscaped areas shall be provided with an automatic underground irrigation system and shall design irrigation systems and watering schedules that supply the appropriate amount of water without overwatering. This does not apply to required landscaping for

residential development. That irrigation system shall be designed by a qualified professional and installed by a licensed irrigator after receiving a permit, as may be required under the construction code.

(11) Earthen berms may be planted and, when installed, shall follow the requirements below.

(A) Earthen berms shall have side slopes not to exceed 3:1 (three feet of horizontal distance for each one foot of height).

(B) Earthen berms shall contain necessary drainage provisions, as may be required by the City Engineer.

(C) Earthen berm plantings shall consist of consisting of newly planted evergreen and deciduous trees and shrubs native to the region.

(D) Evergreen and deciduous trees shall be a minimum of two-inch caliper measured at DBH and a minimum of six (6) feet in height at time of planting.

(E) Required deciduous and evergreen shrubs shall be a minimum of three (3) feet at time of planting.

(12) No tree shall be planted closer than four feet to a right-of-way line nor closer than eight feet to a public utility line (water or sewer), unless no other alternative is available. Further, a landscaping area in which trees are to be provided shall not conflict with a utility easement, unless no alternative is available.

(13) No tree that has a mature height of 25 feet or greater shall be planted within 25 feet (measured horizontally) from the nearest existing or proposed overhead utility line (see Appendix 1 and Appendix 2 of Article 9.07 Tree Preservation for height references).

(e) Xeriscaping Standards. To promote prudent use of the City's water resources and reduce the need for additional water system infrastructure, additional water resources and water purification systems, and to help ensure the viability of required plantings during periods of drought, required landscaping shall comply, where feasible, with the following requirements designed to reduce water usage.

(1) Required plant materials shall be selected from those identified as xeriscape plants on the approved plant list.

(2) Where specific conditions reduce the likelihood that any of the plant materials will survive, other plants on the list may be substituted at the Director's discretion.

(3) Other plants not on the list may be substituted at the Director's discretion. The applicant may be required to provide substantiation as to the hardiness, adaptability, and water demands of the plant when used in this area.

(4) For maximum reduction in water usage, xeriscape plants shall not be interspersed in plant massings with plants requiring higher water usage.

(f) Minimum Landscaping Requirements.

(1) General.

(A) All existing trees that are to be considered for credit shall be provided with a permeable surface within a minimum five-foot radius from the trunk of the tree. All new trees shall be provided with a permeable surface under the dripline with a minimum two and one-half foot radius from the trunk of the tree.

(B) Canopy trees, as specified on the approved plant list, shall account for at least 50% of the required total trees on a site.

(C) Necessary driveways from the public right-of-way shall be allowed through all required landscaping areas in accordance with this Zoning Ordinance. Shared drives shall be allowed through perimeter landscape areas.

(D) All trees planted to satisfy the tree standards must meet the requirements established in Table 25: Planting Requirements.

(2) Parking Lots.

(A) Landscape areas within parking lots shall be at least 180 square feet in size with ~~approximate~~ minimum dimensions of ~~10~~ 9 feet wide by 18 feet deep.

(B) Landscape areas shall be located to define parking areas and assist in clarifying appropriate circulation patterns.

(C) A landscape island shall be located at the terminus of each parking row, and shall contain at least one ~~canopy~~ tree. Exceptions may be granted ~~by the Planning & Zoning Commission~~ during ~~Preliminary Site Plan or~~ Site Plan approval:

(i) When a row ending in ADA parking spaces are separated from the building by a fire lane; or

(ii) Where necessary easements would conflict with planting of a tree.

(D) All landscape areas shall be protected by a monolithic curb or wheel stops and remain free of trash, litter, and car bumper overhangs.

(E) At least 75% of the frontage of parking lots adjacent to a public right-of-way, within the street yard shall be screened from public streets with evergreen shrubs attaining a minimum height of three feet, an earthen berm of a minimum height of three feet, a low masonry wall of a height of three feet, or a combination of the above with a combined height of three feet. A wall used for parking lot screening shall be accompanied with landscape planting in the form of low shrubs and ground cover to soften the appearance of the wall.

(3) Nonresidential, Mixed-Use, and Multifamily Development.

(A) At least 15% of the street yard shall be a permanent landscape area. This requirement is exempt in the Downtown (DT) District.

(B) When located at the intersection of two dedicated public streets (rights-of-way), a minimum 600 square foot landscape area shall be provided at the intersection corner, which can be counted toward the 15% street yard requirement. It shall consist of a combination of the following:

(i) Mulched landscape bed;

(ii) Flowering perennials;

(iii) Low shrubs less than four feet (4') in height;

(iv) Low ornamental grasses at least one foot (1') in height; and/ or

(v) Landscaping rock including but not limited to pea gravel, lava rocks, and river rocks.

(C) A minimum of 10% of the entire site shall be devoted to living landscape, which shall include grass, ground cover, plants, shrubs, or trees.

(i) No landscape area counting toward minimum landscaping requirements shall be less than 25 square feet in area or less than five feet in width.

(D) An applicant shall be required to plant one canopy tree per 40 linear feet, or portion thereof, of street frontage within the required landscape buffer.

(i) Trees may be grouped or clustered to facilitate site design. In no instance shall canopy trees be planted within 30 linear feet of each other.

(ii) These trees must be within the street yard except when the property is restricted by easements.

(iii) When the street yard is restricted by easements any combination of the following may be permitted:

a. The required canopy trees may be substituted with two ornamental trees for every one canopy tree required within the street yard;

b. Up to 50% of the required canopy trees may be placed in the internal landscape.

(E) In the Downtown (DT) District, the required tree planting standard shall be five canopy trees or 10 ornamental trees for every acre of development for lots greater than one acre.

(F) Internal landscape areas shall:

(i) Equal a total of at least eight square feet per parking space;

(ii) Have at least one tree within a landscaped area within 65 feet of every parking space;

(iii) Have a minimum of one tree planted in the parking area for every 10 parking spaces within parking lots with more than 20 spaces. These required trees shall be provided within the internal landscape area. These requirements shall not apply to multi-level parking structures or Downtown (DT) District properties.

(G) Whenever an off-street parking area or vehicular use area abuts an adjacent property line, a perimeter landscape area of at least five feet wide shall be maintained between the edge of the parking area and the adjacent property line. This landscape area shall be grassed and may provide approved ornamental trees or shrubs.

(H) Whenever a nonresidential use, mobile home use, or multifamily use is adjacent to a property used or zoned for single-family or duplex residential use, the more intensive land use shall provide a landscaped area of at least 10 feet in width along the common property line planted with one canopy tree for each 40 linear feet or portion thereof of adjacent exposure.

(I) All nonresidential properties shall provide trees at a ratio of 10 trees per acre (43,560 sq. ft.) or one tree per 4,356 sq. ft. of the gross lot area. At the discretion of the City and the property owner's request, the 10 trees per acre requirement may be satisfied by planting trees elsewhere in the City at the direction and discretion of the Director.

(4) Residential Development.

(A) Generally.

(i) Applicants are required to plant the amount established in Table 26: Residential Planting Requirements per lot prior to obtaining a certificate of occupancy.

(ii) Existing quality trees of at least three-inch caliper size located on the lot shall count to meet this standard if appropriate tree protection measures have been followed.

(B) Requirements.

(i) Trees selected from the canopy tree list in this Section shall be planted on all single-family and two-family lots.

(ii) At least one of the trees must be placed in the front yard of the lot.

(iii) For all residential properties, common areas, and open space lots, applicants are required to plant one canopy tree per 40 linear feet of street frontage. Trees may be grouped or clustered to facilitate site design.

(iv) The following minimum standards apply as established in Table 26: Residential Planting Requirements. An applicant shall choose one of three planting options. An applicant may plant the required canopy trees, ornamental trees, or a combination of canopy and ornamental trees specified in Table 26: Residential Planting Requirements.

Table 26: Residential Planting Requirements

Trees → Zoning District ↓	**Canopy**	**Ornamental**	**Combination (Canopy/Ornamental)**
Single-Family Residential (SF-20.0) District	3	5	2/3
Single-Family Residential (SF-14.5) District			
Single-Family Residential (SF-12.0) District			
Single-Family Residential (SF-10.5) District	2	4	1/3
Single-Family Residential (SF-8.4) District			
Single-Family Residential (SF-7.2) District			
Single-Family Residential (SF-6.0) District	1	3	1/2
Mixed-Density Residential (MD) District	1	2	1/1
NOTE: All required trees will be planted prior to issuance of the certificate of occupancy on the dwelling. The City does not regulate required plantings on individually platted single-family residential lots after issuance of a certificate of occupancy.			

(g) Landscape Buffers.

(1) Landscape Buffers on Local Streets. For all nonresidential, mixed-use, and multifamily developments, a minimum 10-foot landscape buffer adjacent to the right-of-way of any local

street or any other unclassified street is required (see Figure 8: Landscape Buffers). If the lot is a corner lot, all frontages shall be required to observe the 10-foot buffer. Slight modifications may be allowed to the minimum 10-foot landscape buffer in unusual circumstances, as approved on the site plan.

Figure 8: Landscape Buffers

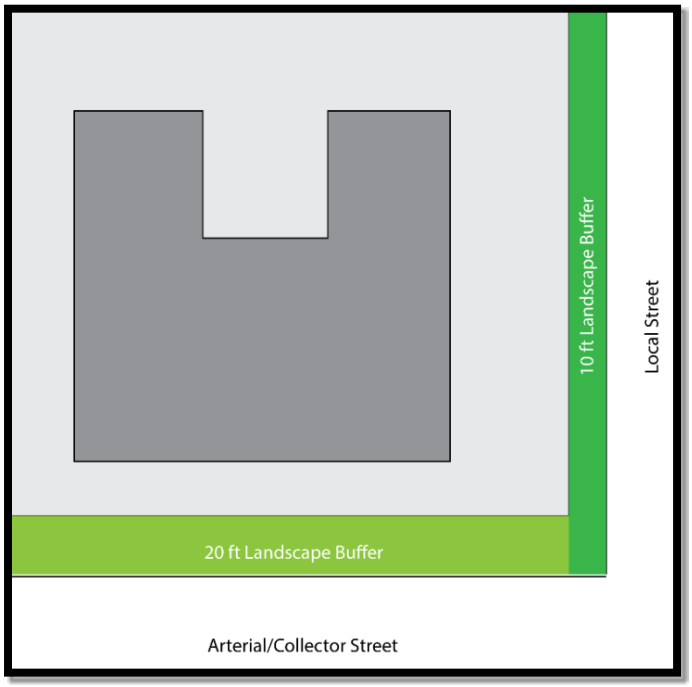

(2) Landscape Buffers on Arterials and Collectors. For nonresidential, mixed-use, and multifamily developments, a minimum 20-foot landscape buffer adjacent to the right-of-way of any arterial or collector is required (see Figure 8: Landscape Buffers). If the lot is a corner lot, all frontages shall be required to observe the 20-foot buffer.

(3) For all residential development, a minimum 20-foot landscape buffer shall be required adjacent to all sides of arterials and collectors.

(4) Modifications. If unique circumstances exist that prevent strict adherence to the requirements of (1) and (2) above, the Planning and Zoning Commission may consider granting a modification during the ~~preliminary site plan or~~ site plan approval process to reduce the minimum 20-foot landscape buffer to a minimum of 10 feet, provided that site design considerations have been incorporated to mitigate the impact of the modification. Unusual circumstances include, but are not limited to, insufficient lot depth or size of the existing lot, existing structures and drives, and floodplain and existing trees to be preserved. A financial hardship shall not be considered a basis for granting a modification.

(5) Properties zoned Downtown (DT) District shall be exempt from landscape buffers except when off-street parking spaces are located in between the right-of-way and the front building face and the headlights face towards the street. For DT properties that do require a landscape buffer, a minimum 10 -foot landscape buffer adjacent to the right-of-way is required.

(h) Tree Preservation.

(1) All tree preservation shall comply with the regulations of this subsection (h) in addition to the requirements established in Article 9.07.

(2) Any protected trees as defined in Article 9.07 (Tree Preservation) preserved on a site meeting these specifications may be credited toward meeting the tree requirement of any landscaping provision of this section for that area within which they are located, according to Table 27: Tree Preservation Credits, depending on the applicant's preference to accept or decline the credit. For purposes of this section, caliper measurement shall be taken at DBH above the ground and rounded to the nearest whole number.

Table 27: Tree Preservation Credits

Caliper of Existing Tree	Credit Against Tree Requirement
6" to 8"	2 trees
9" to 15"	3 trees
16" to 30"	4 trees
31" to 46"	5 trees
47" or more	8 trees

(3) Existing trees may receive credit if they are not on the City's approved plant material list but are approved by the Director; however, trees must be located within the landscape area to which credit is applied.

(4) Any tree preservation proposed shall designate the species, size, and general location of all trees on the conceptual or general landscape plan. The final landscape plan shall show the species, size, and exact location.

(5) During any construction or land development, the developer shall clearly mark all trees to be maintained and may be required to erect and maintain protective barriers around all such trees or groups of trees. The applicant shall not allow the movement of heavy equipment or the storage of equipment, materials, debris, or fill to be placed within the drip line of any trees. This is not intended to prohibit the normal construction required within parking lots.

(6) During the construction stage of development, the applicant shall not allow the cleaning of equipment or material under the canopy of any tree or group of trees to remain. Neither shall the applicant allow the disposal of any waste material, such as, but not limited to, paint, oil, solvents, asphalt, concrete, mortar, etc., under the canopy of any tree to remain. No attachment or wires of any kind, other than those of a protective nature, shall be attached to any tree.

(i) Sight Distance and Visibility.

(1) Rigid compliance with these landscaping requirements shall not cause visibility obstructions and blind corners at intersections as established in Sec. 9.04.041(f).

(2) If visibility obstructions are apparent in the proposed landscape plan as established in Sec. 9.04.041(f), the Director, may modify those landscaping requirements to eliminate the conflict.

(j) Maintenance.

(1) The owner(s) and/or their agent(s), if any, shall be jointly and severally responsible for the maintenance of all landscaping. All required landscaping shall be maintained in a neat and orderly manner at all times. This shall include, but not be limited to:

(A) Mowing (of grass of six inches or higher);

(B) Edging;

(C) Pruning;

(D) Fertilizing;

(E) Watering;

(F) Weeding; and

(G) Other activities common to maintenance of landscaping.

(2) Landscape areas shall be kept free of trash, litter, weeds, and other such material or plants not a part of the landscaping. All plant material shall be maintained in a healthy and growing condition as is appropriate for the season of the year.

(3) Plant materials used to meet minimum landscaping provisions that die or are removed shall be replaced with plant material of similar variety and size within 90 days.

(4) If any tree was preserved and used as a credit toward landscaping requirements was later removed for any reason, it shall be replaced by the number of trees for which it was originally credited. Replacement trees shall have a minimum trunk diameter of three inches measured 24 inches above the ground.

(5) A time extension may be granted by the Director if substantial evidence is presented to indicate abnormal circumstances beyond the control of the owner, tenant, or their agent.

(6) Failure to maintain any landscape area in compliance with this section is considered a violation of this article and may be subject to penalties prescribed for violation of this Zoning Ordinance.

(k) Approved Plant Materials. The allowed plant materials are established in a checklist at the Development Services Department that is maintained by the Director.

(l) Prohibited Plant Materials. The prohibited plant materials are established in a checklist at the Development Services Department that is maintained by the Director.

Sec. 9.04.046. Screening and Fencing

(a) Purpose. The purposes of this section are to:

(1) Minimize conflicts between potentially incompatible land uses and development on the abutting property;

(2) Ensure that screening devices and fences are attractive and in character with the neighborhood;

(3) Maintain fences by recognizing their use to create privacy; and

(4) Distinguish screening devices and fences from each other by clearly defining the two terms and applying specific standards to each term.

(b) Applicability. This section applies to all development within the City's corporate limits. This section does not apply to residential development unless otherwise specified.

(c) Screening Device Standards.

(1) Generally.

(A) All required screening devices must be equally finished on both sides.

(B) All openings on the surface for passage shall be equipped with gates equal in height and screening characteristics specified below, but need not be of the same material as the main fence or wall.

(C) Where a screening device is constructed, placed or planted on uneven terrain, there shall be no gap under the device, and the device must be composed of the same material throughout.

(D) No screening device comprised of brick, masonry, concrete, or solid metal shall be erected or placed that would interfere with the installation or maintenance of any public utility line, service, or drainage way within a dedicated easement unless approved by the City Engineer.

(E) No screening device shall conflict with the sight visibility requirements of Sec. 9.04.041(f).

(F) Any required screening device provided by a more intensive use abutting a residential use or district shall be permanently and adequately maintained by the more intensive use's property owner.

(G) If there is an existing screening device or fence along a residential property line and a nonresidential use is proposed, the required screening device shall be a living plant screen that complies with the requirements established in Sec. 9.04.045 and is deemed acceptable by the Director. However, this requirement may be exempted if a 5-foot minimum space between two screening devices and fences is provided for maintenance access. The intent of these requirements is to eliminate screening situations where two screening walls or fences abut each other.

(H) Before issuing an occupancy permit, all approved screening devices must be in place.

(I) All screening devices shall be permanently and continually maintained in a neat and orderly manner as a condition of use. The occupancy permit may be revoked by the Director for failure to adequately maintain such screening device.

(2) Exceptions. Required screening devices are not required if:

(A) An approved screening device already exists along the property line.

(B) The portion of the subject property to be screened contains a wooded area that shall be maintained for the life of the project and a tree survey indicates that a majority of the trees in the wooded area on the subject property are found to be "quality trees," as defined in the checklist at the Development Services Department; or

(C) The portion of the subject property to be screened is adjacent to a floodplain containing existing trees that provide natural screening.

(3) Design Requirements. A screening device shall be erected or placed in all locations and in accordance with all provisions specified below:

(A) Height. The minimum and maximum screening device height follow the requirements established in Table 28: Required Screening Height.

Table 28: Required Screening Height

Screening	Minimum Height	Maximum Height
Drone Delivery Hub	6 ft	15 ft
Drone Delivery Pick-Up Kiosk	5 ft	8 ft
Garbage, Trash, or Refuse Container	7 ft	10 ft
Outdoor Storage	8 ft	10 ft

Multifamily	6 ft	8 ft
Industrial	8 ft	10 ft
Other Required Screening	6 ft	8 ft

(B) Materials. The materials shall consist of one or more of the following unless specified elsewhere in this Zoning Ordinance (See Figure 9: Allowed Screening Devices):

(i) Brick masonry, stone masonry, concrete block, or other architectural masonry finish; or

(ii) Tubular steel (primed and painted) or wrought iron fence with masonry columns spaced a maximum of 20 feet on center with structural supports spaced every ten feet, and with sufficient evergreen landscaping to create a solid screening effect; or

(iii) Living plant screens (Evergreen shrubs with a minimum of three feet in height at the time of planting) that will not be detrimental to adjacent property and will provide sufficient visual screening based on the proposed location and characteristics of the project. A living plant screen shall comply with the requirements established in Sec. 9.04.045; or

(iv) Alternate equivalent screening that provides an exceptional screening aesthetic, meets sound structural practices and engineering design criteria, meeting the intent and function of this Section at the discretion of the Director and City Engineer.

Figure 9: Allowed Screening Devices



(4) Locational Requirements. The following locational requirements apply:

(A) All allowed open storage of materials, equipment, or commodities shall be screened from view from all streets and any residential properties. Materials, equipment, or commodities shall be stacked no higher than one foot below the top of the screening device or visual barrier.

(B) Garbage, trash, or refuse containers shall meet the requirements established in Sec. 9.04.048.

(C) All wrecking yards, junkyards, or salvage yards shall be fenced on all sides and shall be screened from view from the public right-of-way and from adjacent residential property.

(D) Display of new vehicles, or used vehicles not defined as junked vehicles under the ordinances of the City or laws of the State of Texas, need not be screened if they are, in the opinion of the chief building official, maintained in a neat and orderly manner.

(E) Ground mechanical and heating and air conditioning equipment in nonresidential and multifamily uses shall be screened from view from the public right-of-way and from adjacent residential property.

(F) Roof-mounted mechanical units shall be screened from view at a point of 5.5 feet above the property line with a parapet wall, mansard roof, or alternative architectural element. The height of the screening element shall be equal to or greater than the height of the mechanical unit provided that the element shall not extend more than 5 feet above the roof on a one or two story building or more than 13 feet above the roof on a building of 3 or more stories. A mechanical unit that is taller than the maximum permitted height of the screening feature shall be set back from the screen 5 feet plus 2 feet for each foot exceeding the height of the screen. Screening for mechanical units shall apply to new building construction only.

(G) At automotive uses, vehicles awaiting repair for more than 24 hours or after the close of business shall be screened from view from public right-of-way and from adjacent residential property.

(H) A screening device meeting the standards established in Table 28: Required Screening Height shall be constructed on nonresidential property adjacent to the common side or rear property line.

(I) Nonresidential uses in a residential district shall be screened from view of any adjacent residential lot or dwelling use along the side and rear property lines of that nonresidential use. These screening requirements are not required for public schools, parks, or religious land uses, except where a parking lot or active outdoor intensive-use area (such as a playground) is adjacent to a residential lot or dwelling.

(J) Off-street loading areas of any nonresidential use shall be screened from view of any residential dwelling or lot or of any other adjacent public land use.

(K) Where a multifamily use abuts a single-family or two-family use or district, the side and rear property lines of that multifamily use shall be screened from view of adjacent dwelling(s).

(L) No screening device or fence shall be erected, placed, or planted beyond the front building line of any permitted building in a residential district, either on a corner lot or interior lot, unless otherwise allowed by the Board of Adjustment through a variance request.

(M) Where a nonresidential use abuts a residential lot, use, or district, the side and rear property lines abutting that residential lot, use, or district shall be suitably screened by the nonresidential use so as to obscure the view from the residential lot, use, or district to the nonresidential use to a height not less than six feet.

(N) Where a district boundary separating a residential district from a nonresidential district is along a street or alley, and an automobile parking lot or parking area is located in the front

yard of the nonresidential use, then said parking lot or parking area facing the residential lot, use, or district shall be suitably screened to a height of not less than three and one-half feet.

(O) Drone Delivery Hubs shall be fenced on all sides and shall be screened from view from the public right-of-way and from adjacent residential property.

(P) Drone Delivery Pick-Up Kiosk shall be screened from the public right-of-way if located in the street yard.

(d) Fencing Standards.

(1) Generally.

(A) Solid fences shall not be allowed in the required front yard in any district, except for the Mixed-Density Residential (MD) and Multifamily Residential (MF) districts. In these instances, a 20-foot minimum setback shall be required for fencing along the right-of-way frontage.

(B) No fence shall exceed three feet in height in the required front yard in any residential district.

(C) No fence shall be allowed in the required right-of-way.

(D) No fence shall conflict with the sight visibility requirements of Sec. 9.04.041(f).

(E) Every fenced enclosure constructed under the provisions of this section shall have at least one gate in its perimeter.

(F) Chain link fencing is only allowed on single-family residential lots and industrial sites.

(G) All fences constructed under this section's provisions shall be maintained to comply with this section's requirements at all times. The Director may order the repair or removal of a fence if it is more than 5% damaged or leaning 10 degrees from vertical. Fences shall be repaired in compliance with the provisions of this section.

(2) Corner Lots.

(A) On all corner lots in residential districts with opposing rear lot lines, fences may be constructed not exceeding 96 inches in height along the side and rear yard lines, as indicated in Figure 10: 96 Inch Height Limit.

Figure 10: 96 Inch Height Limit

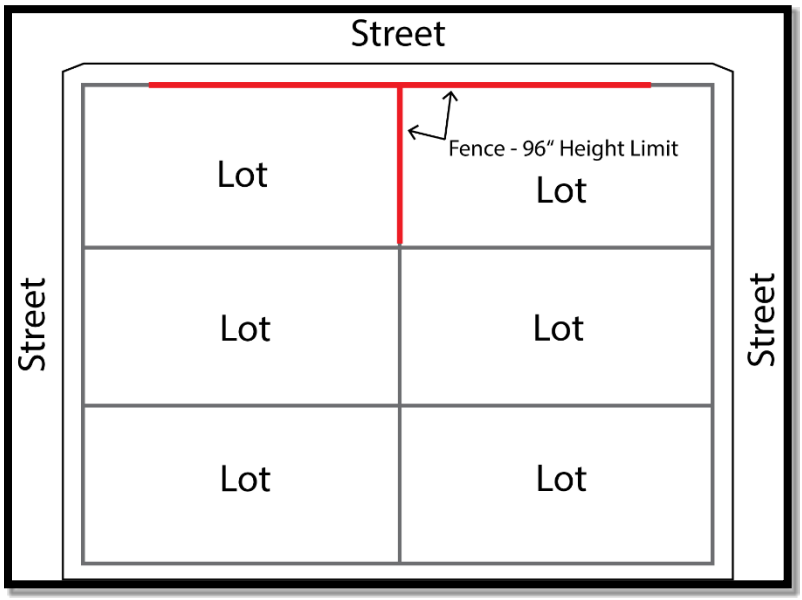

(B) On all residential district corner lots where the rear lot line is opposed to a side lot line across an alley from that side lot line, no fence exceeding 30 inches in height shall be constructed upon or within the side yard that is next to the street at a distance from the side building line greater than the minimum side yard requirement, as indicated in Figure 11: Fence near Alley.

Figure 11: Fence near Alley

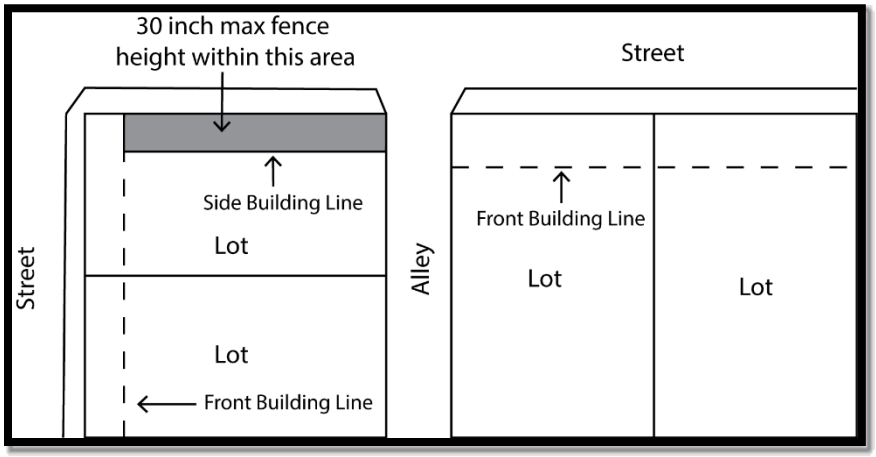

(C) On all residential district corner lots that are key lots, the corner lot shall have a front building line on both streets, unless that key lot is separated from other lots by a dedicated street or alley. Where the lot lines are opposed to a side lot line of an adjoining lot, no fence exceeding 30 inches in height shall be constructed between the front building lines and the side yard line of the abutting lot, as indicated in Figure 12: Fence at Corner (Key Lot).

Figure 12: Fence at Corner (Key Lot)

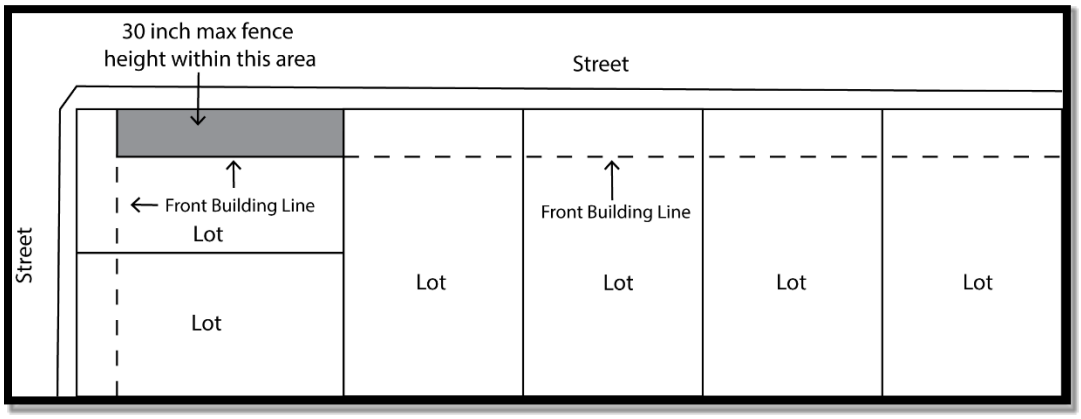

(3) Design Requirements.

(A) Height. The minimum fence height is 6’ from average lot grade with a maximum height of 8’.

(B) Construction.

(i) Treated lumber attached with galvanized screws to 2-3/8” diameter galvanized poles installed in an 8” diameter holes no less than 2-1/2 feet deep in 2’ of premixed concrete.

(ii) All posts shall have caps.

(iii) Brick, stone, masonry, vinyl materials or a combination with masonry columns every 8 feet. All columns shall be at least 18 inches wide and must be the vertical length of the fence.

(iv) Vinyl materials cannot be used in multifamily areas.

(v) No thin-wall masonry walls are allowed unless constructed with brick, stone, or other approved masonry units and supported by angle iron with masonry columns on piers.

(vi) All thin-wall plans shall be sealed by a professional engineer and approved by the City. A “thin wall” is defined as any wall 6” or less in width.

(vii) At the minimum, wrought iron fences shall have:

a. 2” by 2” by 3/16” square steel tube posts with cast iron pyramid finial “C-1” secured with stainless steel set screws.

b. Steel tube posts spaced no more than 8 feet from another post.

c. 5/8” solid square pickets spaced 3” to 10” apart.

d. A 3/4" by 3/4" by 1/8” channel horizontal rail near the upper half of the fence.

(4) Security Fencing.

(A) Barbed wire fences used in conjunction with permitted agricultural and related activities are permitted without restrictions, but are expressly prohibited in all other districts except as provided below.

(B) In residential areas, barbed wire, razor wire, electrified fencing, or other hazardous material are not allowed in the construction of fencing.

(C) No fence that conducts an electrical current is allowed in any district or for any use except for those uses in an agricultural zoning district or correctional facility.

(D) Barbed wire strands may be placed on top of permitted fences and screening devices in any district for the purpose of security from theft, entry, and hazard around public utility substations and uses of a similar nature, provided the top strand is not higher than 12 feet nor the bottom strand lower than eight feet from the adjacent grade line.

(E) Barbed wire may be placed on gate arms, fences, and screening devices in industrial zoning districts.

(5) Locational Requirements. The following locational requirements apply:

(A) A fence shall be located between a right-of-way or parking lot and pedestrian areas including but not limited to playground equipment, sports fields, outdoor commercial amusement areas but excluding sidewalks, colonnades, and paseos. Shrubs may be planted in lieu of a fence to provide a barrier that would create the same effect. Openings in the fence or shrub line no greater than five - feet in width are permissible for every 15 linear feet of fence line. Additional exceptions may be granted by the Planning & Zoning Commission during ~~Preliminary Site Plan or~~ Site Plan approval.

Sec. 9.04.047. Outdoor Lighting

(a) Purpose. The purposes of this Section are to:

(1) Define practical and effective measures by which the obtrusive aspects of excessive and careless outdoor light usage can be minimized, while preserving safety, security, and the nighttime use and enjoyment of property; and

(2) To curtail the degradation of the nighttime visual environment by encouraging lighting practices that direct appropriate amounts of light where and when it is needed, increasing the use of energy-efficient sources, and decreasing the waste of light and glare resulting from overlighting and poorly shielded or inappropriately directed lighting fixtures.

(b) Applicability.

(1) Generally. For all proposed new construction or additions to existing facilities, all new outdoor lighting fixtures shall meet the requirements of this section.

(2) Additions. Additions shall require the submission of a complete inventory and site plan detailing any proposed new outdoor lighting. New lighting on the site shall meet the requirements of this Section regarding shielding and lamp type.

(c) Compliance. All outdoor luminaires devices shall be installed in conformance with the provisions of this Section, the building code, the electrical code, and the City's sign code as applicable and under appropriate permit and inspection.

(d) Roadways. Lighting for roadways shall utilize only cutoff light fixtures.

(e) Lighting Zones Established. Lighting standards are regulated by zones. These zones are established in Table 29: Lighting Zones.

Table 29: Lighting Zones

Lighting Zone	Zoning Districts
E1	AG
E2	SF-20.0
	SF-14.5
	SF-12.0
	SF-10.5
	SF-8.4
	SF-7.2
	SF-6.0
	MD
E3	MF
E4	C-1
	C-2
	MU
	DT
	I-1
	I-2

(f) Lighting Classification.

Outdoor lighting is classified according to use as follows:

(1) Class 1 (Color Rendition). All outdoor lighting used for, but not limited to, outdoor sales or eating areas, assembly or repair areas, advertising and other signs, recreational facilities and other similar applications where color rendition is important to preserve the effectiveness of the activity. Recognized Class 1 uses are: outdoor eating and retail food or beverage service areas; outdoor maintenance areas; display lots; assembly areas such as concert or theater amphitheaters.

(2) Class 2 (General Illumination). All outdoor lighting used for, but not limited to, illumination for walkways, roadways, equipment yards, parking lots and outdoor security where general illumination for safety or security of the grounds is the primary concern.

(3) Class 3 (Decorative). Any outdoor lighting used for decorative effects including, but not limited to, architectural illumination, flag and monument lighting, and illumination of trees, bushes, etc.

(g) Shielding Standards. All nonexempt outdoor lighting fixtures shall have shielding as shown in Table 30: Shielding Standards.

Table 30: Shielding Standards

Use Class and Lamp Type		E1	E2	E3	E4
Nonresidential Uses					
Class 1 Lighting (Color Rendition)	Initial Output ≥ 1800 lumens	F	F	F	F
	Initial Output < 1800 lumens [2]	F	A [1]	A [1]	A [1]
Class 2 Lighting (General Illumination)	Initial Output ≥ 1800 lumens	F	F	F	F
	Initial Output < 1800 lumens [2]	F	A [1]	A [1]	A [1]
Class 3 Lighting (Decorative) [3]	Initial Output ≥ 1800 lumens	X	F	F	F
	Initial Output < 1800 lumens [2]	F	A [1]	A [1]	A [1]
Residential Uses					
All classes [4]	Initial Output ≥ 1800 lumens	F	F	F	F
	Initial Output < 1800 lumens [2]	A [1]	A [1]	A [1]	A [1]
Key	**A** = All types of fixtures allowed; shielding not required but highly recommended, except that any spot or flood light shall be aimed not higher than 25 degrees from the vertical line between the fixture and the ground when the source is visible from any off-site residential property or public roadway. **F** = Only fully shielded fixtures allowed. **X** = Not allowed. [1] Flood or spot lamps shall be aimed no higher than 25 degrees from the vertical line between the fixture and the ground when the source is visible from any off-site residential property or public roadway. **Exception**: Seasonal decorations using typical unshielded low-wattage incandescent lamps shall be permitted in all lighting zones for 90 calendar days. [2] See exception for seasonal decorations. [3] All class 3 lighting shall terminate between 11:00 p.m. (or when the business closes, whichever is later) and sunrise. [4] Residential refers to single-family attached or detached uses located in any of the zoning districts. Multifamily residential uses, or apartments, must use standards for Class 1, 2, and 3 lighting.				

(h) Total Outdoor Light Output Standards. Total outdoor light output shall not exceed the limits in Table 31: Lumens Caps. Seasonal decorations, permitted between November 15th and January 15th, are not counted toward these limits. (The values in this table are the maximum permitted levels and not intended as design standards; design standards shall be the lowest levels that meet the requirements of the task.)

Table 31: Lumens Caps

Lumens Caps – Initial Lamp Lumens per Net Acre	Type	E1	E2 (4)	E3 (4)	E4
Nonresidential Uses (1)	Total (full cutoff + unshielded)	125,000	50,000	200,000	1,000,000
	Unshielded only	2,000	4,000	4,000	40,000
Residential Uses (2) (3)	Total (full cutoff + unshielded)	10,000	10,000	10,000	20,000
	Unshielded only	1,000	1,000	5,000	5,000
Key	(1) This refers to all commercial and industrial uses and includes multifamily or apartment uses. (2) This refers to all single-family attached or detached uses. (3) In lighting zones E1 – E4, each residential single-family attached or detached dwelling or two-family dwelling is allowed up to 5,500 total lumens, or the amount indicated in this table based on the parcel's acreage, whichever is larger. Each is also allowed a maximum of 5,500 lumens of unshielded ("A") lighting, provided Table 30: Shielding Standards allows the lamp's type with "A" shielding. All residential spot or flood lamps permitted are to be aimed no higher than 25 degrees from the vertical line between the fixture and the ground when the source is visible from any off-site residential property or public roadway. (4) Schools located in zones E2 and E3 may petition the Director for an increase in the lumens-per-acre cap to the level permitted in zone E4. The Director may allow an increase when the school submits an engineered design supporting the need for such increase.				

(i) Effective Shielding Standard. All light fixtures that are required to be shielded shall be installed and maintained in such a manner that the shielding is effective, as described in the definition herein for full cutoff fixtures.

(j) Light Trespass Standard.

(1) Beyond the shielding requirements, all light fixtures shall be located, aimed, or shielded to minimize stray light trespassing across residential property boundaries.

(2) Any lamp installed on a residential property in zone E1 and visible from any other residential property shall be shielded such that it is not directly visible from that property.

(3) Luminaires, spot lamps, or spotlights that are aimed, directed, or focused to cause direct light to be directed toward residential buildings or adjacent or nearby land, or to create glare perceptible to persons operating motor vehicles on streets or roadways, shall be redirected or their light output controlled as necessary to eliminate such conditions.

(k) Special Uses.

(1) Recreational Facilities.

(A) Lighting for outdoor athletic fields, courts, tracks, or similar recreational facilities in lighting zones E1, E2, E3, and E4, shall be considered class 1 (color rendition), and shall be exempt from the lumens-per-acre limits of (h) above.

(B) Shielding. In lighting zones E1, E2, E3, and E4, full cutoff lighting is required for any recreation or public/institutional use. Recreational uses, such as football fields, soccer fields, golf courses, and baseball diamonds designed for class III or IV levels of play (typically amateur or municipal league, elementary to high school, training, recreational or social levels as defined by the IESNA Lighting Handbook and IESNA RP-6 Sports and Recreational

Area Lighting) or designed for class I and II levels of play (typically college, semi-professional, professional or national levels as defined by the IESNA Lighting Handbook and IESNA RP-6 Sports and Recreational Area Lighting) shall utilize luminaires with minimal uplight consistent with the illumination constraints of the design. Where full cutoff fixtures are not utilized, acceptable luminaires shall include those that:

(i) Are provided with internal and/or external glare control louvers and installed to minimize uplight and off-site light trespass; and

(ii) Are installed and maintained with aiming angles that permit no greater than 5% of the light emitted by each fixture to project above the horizontal.

(C) Illuminance. All lighting installations shall be designed to achieve no greater than the minimal illuminance levels for the activity as recommended by the Illuminating Engineering Society of North America (IESNA).

(D) Off-site Light Trespass. The installation shall also limit off-site spill (outside the parcel containing the recreational facility) to the maximum extent possible consistent with the illumination constraints of the design. For class III and IV levels of play, a design standard of one lux (0.1 fc) at the property line of any residential property at a vertical point five feet above grade, as measurable from any orientation of the measuring device, shall be required. For class I and II levels of play, a design goal of one and one-half lux (0.15 fc) at the property line of any residential property at a vertical point five feet above grade, as measurable from any orientation of the measuring device, shall be required.

(E) Engineering Design. Every such lighting system shall be designed by a registered professional engineer.

(F) Curfew. All events shall be scheduled so as to complete all activity before the curfew listed in Table 32: Lighting Zone Curfew. Illumination of the playing field, court, or track shall be permitted after the curfew only to conclude a scheduled event that was unable to conclude before the curfew.

Table 32: Lighting Zone Curfew

Lighting Zone			
E1	E2	E3	E4
8 p.m.	9 p.m.	10 p.m.	11 p.m.

(2) Outdoor Display Lots.

(A) Lighting for display lots shall be considered class 1 (color rendition), and shall be allowed a lumens-per-acre cap of two million.

(B) Shielding. All display lot lighting shall utilize full cutoff luminaires installed in a fashion that maintains the full cutoff characteristics.

(C) Illuminance. Lighting for display lots shall be considered class 1 (color rendition).

(D) Off-site Light Trespass. The display lot shall limit off-site light trespass (outside the parcel containing the display lot) to a maximum of 0.5 lux (0.05 fc) at the property line of any residential property at a vertical point five feet above grade, as measurable from any orientation of the measuring device, shall be required.

(E) Engineering Design. Every display lot lighting system shall be designed by a registered professional engineer.

(F) Curfew. Display lot lighting exceeding the lumens-per-acre cap shall be turned off at the curfew listed herein or within 30 minutes after closing of the business, whichever is later. Lighting in the display lot after this time shall be considered class 2 lighting and shall conform to all restrictions of this section applicable for class 2 lighting, including the lumens-per-acre caps in (h) above.

(3) Gas Station Canopies.

(A) Lighting Class. Lighting for service station canopies shall be considered class 2 lighting (general illumination).

(B) Shielding. All luminaires mounted on or recessed into the lower surface of service station canopies shall be full cutoff and utilize flat lenses.

(C) Total Under-canopy Output. The total light output used for illuminating service station canopies, defined as the sum of all under-canopy initial bare-lamp outputs in lumens, shall not exceed 40 lumens per square foot of canopy in Lighting Zone E4, and shall not exceed 20 lumens per square foot in Lighting Zone E3. All lighting mounted under the canopy, including but not limited to luminaires mounted on the lower surface or recessed into the lower surface of the canopy and any lighting within signage or illuminated panels over the pumps, is to be included toward the total at full initial lumen output.

(D) Lumen Output. The lumen output of lamps mounted on or within the lower surface of a canopy is included toward the lumen caps in (h) above according to the method defined in (h) above. Other lighting located under a canopy but not mounted on or within the lower surface is included toward the lumen caps in (h) above at full initial output.

(E) Off-site Light Trespass. The service station canopy lot shall limit off-site light trespass (outside the parcel containing the service station lot) to a maximum of 0.5 lux (0.05 fc) at the property line of any residential property at a vertical point five feet above grade, as measurable from any orientation of the measuring device, shall be required.

(4) Other Lighting on Parcels with Special Uses. On a property with special uses as listed above, all lighting not directly associated with the special use areas above shall conform to the lighting standards described in this section, including but not limited to the lamp type and shielding requirements of (i) above and the lumens-per-acre limits of (h) above. The net acreage for the determination of compliance with (h) above shall not include the area of the athletic field or outdoor display lot, as defined in (g) above; the area of any service station canopy shall be included in the net acreage.

(l) Prohibitions.

(1) Installation of nonconforming fixtures and lamps. The installation of any outdoor lighting fixture or lamp for new construction, additions, or replacement fixtures to existing facilities not in compliance with this section is prohibited.

(2) Laser source light. The use of laser source light or any similar high-intensity light for outdoor advertising or entertainment, when projected above the horizontal, is prohibited unless installed for temporary use with prior approval of the Director under (m) below. Authorization for such temporary use shall be for no more than three days per 365-day period for any one applicant or property and shall additionally be subject to any necessary state and federal approvals.

(3) Searchlights. The operation of searchlights for nongovernmental purposes is prohibited, unless installed for temporary use with prior approval of the Director under (m) below. Authorization for such temporary use shall be for no more than three days per 365-day period for any one

applicant or property and shall additionally be subject to any necessary state and federal approvals.

(4) Existing Lighting causing Light Trespass onto Residential Property.

(A) If, after complaint and investigation, the Director finds that an existing light fixture directs light toward residential buildings, the Director shall give written notice of that violation to the owner and to the occupant of the premises demanding that the violation be abated within 90 days of the date of written notice.

(B) Light trespass onto residential property from existing lighting shall be remedied by redirecting the light fixture, installing a shield, or by controlling the light output as necessary.

(C) Light levels shall not exceed a maximum of 0.25 footcandles (2.5 lux) at the property line of any residential property at a vertical point five feet above grade.

(D) Light trespass measurements shall be made at the property line of the residential site, with the meter held normal to a line between any offending light source(s) and the light meter. If measurement on private property is not possible or practical, light-level measurements may be made at the boundary of the public right-of-way or at any other location on an adjacent property.

(E) Measurement shall be made using a commercial cosine and color-corrected meter having an accuracy tolerance of plus or minus 5% or better at one lux (0.1 footcandle). The meter shall have been calibrated within two years of the date of measurement by the manufacturer or by a certified illumination laboratory.

(F) Measurements shall be taken using a 4.5” long, 1.75” +/- 0.25” diameter thin wall black tube baffle atop the meter’s photoelectric cell aperture to prevent any stray light from other sources from affecting the measurement.

(m) Temporary Exemptions.

(1) Temporary Exemption Requests. A temporary exemption request shall be subject to the approval of the Director. A request shall contain the following information:

(A) Specific ordinance exemption(s) requested;

(B) Duration of requested exemption(s);

(C) Proposed location on premises of the proposed light fixture(s);

(D) Purpose of proposed lighting;

(E) Information for each luminaire and lamp combination as required in (n) below;

(F) Previous temporary exemptions, if any, and addresses of premises thereunder; and

(G) Any other data and information as may be required by the Director.

(2) Approval – Limitation. The Director shall have five business days from the date of submission of the request for a temporary exemption to act, in writing, on the request. If approved, the exemption shall be valid for not more than 30 days from the date of issuance of the approval. The approval shall be renewable upon further written request for a maximum of one additional

30-day period. The director is not authorized to grant more than one temporary permit and one renewal for a 30-day period for the same property within one calendar year.

(3) Disapproval – Appeal. If the request for temporary exemption or its extension is disapproved, the applicant shall have the appeal rights provided in Sec. 9.04.050(m).

(n) Other Exemptions.

(1) Nonconformance.

(A) Bottom-mounted or unshielded on-premises or off-premises sign lighting shall comply with the shielding standards.

(B) Post-top antique or acorn-style luminaires that cannot achieve full cutoff may be used if they achieve cutoff.

(i) There shall be no change in use or lamp type, change or replacement of ballast or any replacement (except for same-type and same-output lamp replacement) or structural alteration made, without conforming to all applicable requirements of this section.

(ii) All existing outdoor lighting fixtures shall comply with the shielding standards of (g) above.

(2) Flag Illumination. Illumination of City, county, state, or U.S. flags with spotlights or flood lamps is exempt from all the requirements of this section.

(3) State and Federal Facilities. Compliance with the intent of this section by facilities that are owned, operated and maintained by the state or federal government is encouraged but not required.

(4) Emergency Lighting. Emergency lighting, used by police, firefighting, or medical personnel, or at their direction, is exempt from all requirements of this section for as long as the emergency exists.

(5) Swimming Pool and Fountain Lighting. Underwater lighting used for the illumination of swimming pools and fountains is exempt from the lamp type and shielding standards of (g) above, though such lighting shall conform to all other provisions of this section.

(6) Fossil fuel lights. All outdoor light fixtures producing light directly by the combustion of natural gas or other fossil fuels are exempt from all requirements of this section.

(o) Appeals.

(1) Historic Properties. Properties designated as federal, state, or local historic landmarks or that are within a federal, state, or local historic district shall be exempt from this section if there is a finding of an adverse impact on any significant historical, cultural, or archaeological element of the property as determined in writing by the City historic landmark commission or by the Texas historic preservation officer whenever the City historic landmark commission is without jurisdiction to require review of proposed work.

(2) Appeals. Any person aggrieved by any decision of the Director made in administration or enforcement of this Section has the right of appeal to the Board of Adjustment.

Sec. 9.04.048. Trash

(a) Purpose. The purpose of this Section is to provide adequate provisions for on-site waste disposal and collection while promoting sightly development.

(b) Applicability. This Section applies to all nonresidential development within Anna's corporate limits. This Section does not apply to residential development unless otherwise specified.

(c) Standards.

(1) Generally.

(A) Garbage, trash, or refuse containers require enclosures and shall meet the requirements established in Sec. 9.04.046(c).

(B) ~~Two~~ A minimum of one enclosure~~s are~~ is required on every commercial, multifamily, and industrial lot. ~~This requirement shall be met by either a~~The minimum dimensions of a double enclosure shall be 10 feet by 24 feet ~~or two~~ and single enclosures shall be 10 feet by 12 feet on every lot.

(C) All ~~enclosures~~ garbage, trash, and refuse containers are fully screened on all sides.

(D) Enclosure materials shall be masonry or concrete block and the same color as the exterior walls of the main structure.

(E) S~~A s~~olid metal gate~~s are is~~ required and shall:

~~(i) , and when open is not allowed to encroach within any fire lane.~~

(i) When open, the gates are not allowed to encroach within any fire lane.

(ii) No solid metal gate shall exceed 8 feet in height.

~~(ii)~~(iii) Gates shall remain closed except when in use for access.

~~(E)~~(F) Enclosures shall also be complemented by a living plant screen as established in Sec. 9.04.046(c)(3).

~~(F)~~(G) Garbage, trash, or refuse containers shall not be located in front of the main building unless no other option is available.

~~(G)(H) Gates shall remain closed except when in use for access.~~

~~(H)~~(I) All required garbage, trash, or refuse containers shall comply with CARDS design requirements established on the CARDS website (see website link). If CARDS is no longer the City's approved provider, then all required garbage, trash, or refuse containers shall comply with the design requirements of the City's newly contracted provider.

~~(I)~~(J) Residential amenity centers and commercial uses~~W~~ within the DT District, City contractor-approved rolling carts (CARDS carts, etc.) may be used to meet this Section's requirements. More dumpsters may be required at the Director's discretion.

(2) Design. Garbage, trash, or refuse containers shall comply with the design specifications below.

(A) Trash compactor enclosures and all other enclosure types shall comply with the Texas Commission on Environmental Quality Office of Waste's specifications (see website https://www.tceq.texas.gov/permitting/waste_permits/msw_permits/msw.html).

(B) All enclosure types shall provide a minimum of 40 feet of straight backing, as measured from the front gates of the enclosure, to accommodate a sanitation truck's maneuverability. If special circumstances prevent straight backing from being provided, the Texas Commission on Environmental Quality Office of Waste shall have the authority to approve angled or alternative backing movements.

~~(C)~~ All enclosure types shall provide a 24-foot vertical clear zone, unless otherwise approved by the Texas Commission on Environmental Quality Office of Waste's specifications.

(3) Shared Garbage, Trash, or Refuse Containers.

(A) Within the DT District, any nonresidential use, except for automotive and industrial uses, may share a garbage, trash, or refuse container with another nonresidential use by providing a shared garbage, trash, or refuse container agreement to the Director.

(B) The garbage, trash, or refuse container agreement shall be filed with the Collin County Clerk.

(C) A garbage, trash, or refuse container agreement shall be approved by the Director before filing with the County.

(D) The garbage, trash, or refuse container agreement shall include:

(i) All parties involved, including the property owners or agents and site owners or agents;

(ii) Duration and time of use; and

(iii) An exhibit indicating the:

a. Location of the garbage, trash, or refuse container on a site plan; and

b. Distance of the garbage, trash, or refuse container to the use, building, or site.

Sec. 9.04.049. Performance Standards

(a) Purpose. The purpose of this Section is to establish regulations that protect the public from the potential negative effects of industrial and intense commercial development by regulating smoke and particulate matter, odorous matter, fire or explosive materials, toxic and noxious matter, vibration, open storage, and glare in the vicinity of those sites.

(b) Applicability. In all zoning districts, any permitted use shall conform in operation, location, and construction to the performance standards established in this Section.

(c) Standards.

(1) Noise.

(A) Generally.

(i) It shall be unlawful for any person to willfully make, cause to be made, or continue any unreasonable noise within the City.

(ii) Any unreasonable noise that is plainly audible, as indicated below, shall be considered prima-facie evidence of a violation of this Section.

a. At the property line of a property;

b. Within 25 feet of the noise source when the noise source is within a vehicle or on the public right-of-way; or

c. Through the common wall in a building.

(B) Exemptions.

(i) Activities directly connected with the abatement of an emergency, including construction activities and authorized emergency vehicles when such vehicles are responding to an emergency call or when in pursuit of an actual or a suspected violator of the law or when responding to, but not returning from a fire, are excluded from the provisions of this Section.

(ii) Bells and chimes, or any device for the production or reproduction of the sound of bells or chimes from any religious land use, school, or clock, operated between the hours of 7:00 a.m. and 10:00 p.m. are excluded from the provisions of this Section.

(iii) Firework displays, which otherwise comply with the Anna Code, are excluded from the provisions of this Section.

(iv) Activated burglar alarms, which otherwise comply with the Anna Code, are excluded from the provisions of this Section.

(C) Sound Levels.

(i) Sound pressure levels shall be measured at the approximate location of the property line, at the height of at least four feet above the immediate surrounding grade, on a sound level meter of standard design and operated on the A network.

(ii) The maximum permissible sound pressure levels of any continuous source of sound is given in Table 33: Sound Pressure Level Limits. Sound pressure levels exceeding these limits are considered an unreasonable noise and are prohibited.

Table 33: Sound Pressure Level Limits

Zoning District	dB(A) during the Day (7 am to 7 pm)	dB(A) during the Night (7 pm to 7 am)
All Residential Districts	55	50
Nonresidential Districts (except Industrial)	60	55
Industrial Districts	80	75

(2) Vibration. No operation or use shall at any time create earth-borne vibrations that when measured at the bounding property line of the source operation exceed the limits of displacement established in Table 34: Vibration Displacement Limits.

Table 34: Vibration Displacement Limits

Frequency Cycles per Second	Displacement in Inches
0 – 10	0.0010
10 – 20	0.0008
20 – 30	0.0005
30 – 40	0.0004
40+	0.0003

(3) Smoke and Particulate Matter. No operation or use shall cause, create, or allow the emission for more than 3 minutes in any one hour of air contaminants that at the emission point or within the bounds of the property are:

(A) As dark or darker in shade as that designated as No. 2 on the Ringelmann Chart as published by the United States Bureau of Mines Information Circular 7118.

(B) Of such opacity as to obscure an observer's view to a degree equal to or greater than does smoke or contaminants in the standard prescribed in (A) above, except that when the presence of uncombined water is the only reason for failure to comply or when such contaminants are emitted inside a building that prevents their escape into the atmosphere, this standard and the standard in (A) above shall not apply.

(C) The emission of particulate matter from all sources shall not exceed 0.5 pounds per acre of property within the plant site per any one hour.

(D) The open storage and open processing operations, including onsite transportation movements that are the source of wind or airborne dust or other particulate matter; or that involves dust or other particulate air contaminants, generating equipment such as used in paint spraying, grain handling, sand or gravel processing or storage, or sand blasting all be so conducted that dust and other particulate matter so generated are not transported across the boundary line of the tract on which the use is located in concentrations exceeding 4 grains per 1,000 cubic feet of air.

(4) Odorous Matter.

(A) No use shall be located or operated that involves the emission of odorous matter that exceeds the odor threshold at the bounding property line or any point beyond the tract on which the emitting use is located.

(B) The odor threshold as herein set forth shall be determined by observation by a person or persons. In any case, where uncertainty may arise, or where the operator or owner of an odor-emitting use may disagree with the enforcing officer, or where specific measurement of odor concentration is required, the method and procedures specified by the American Society for Testing Materials (A.S.T.M.D.) 1391-57 entitled "Standard Method for Measurement of Odor in Atmospheres" shall be used and a copy of A.S.T.M.D. 1391-57 is hereby incorporated by reference.

(5) Fire or Explosive Hazard Material.

(A) No use involving the manufacture or storage of compounds or products that decompose by detonation shall be permitted except that chlorates, nitrates, per chlorates, phosphorus, and similar substances and compounds in small quantities for use by industry, school laboratories, druggists, or wholesalers may be permitted when approved by the Fire Department.

(B) The storage and use of all flammable liquids and materials such as pyroxylin plastics, nitrocellulose film, solvents, and petroleum products shall be permitted only when such storage or use conforms to the standards and regulations of the Fire Department.

(6) Toxic and Noxious Matter. No operation or use shall emit a concentration across the bounding property line of the tract on which such operation or use is located of toxic or noxious matter that will exceed 10% of the concentration (exposure) considered as the threshold limit for an industrial worker as such standards are set forth by the Texas State Department of Health in "Threshold Limit Values Occupational Health Regulation No. 3," a copy of which is hereby incorporated by reference.

(7) Water and Waste Pollution.

(A) No operation or activity shall discharge or cause to be discharged, liquid or solid waste into public waters unless in conformance with the provisions of the Texas Water Quality Board.

(B) No discharge at any point will be allowed into any public sewer, private sewer disposal system, or stream or into the ground, except in accordance with standards approved by the state health department or standards equivalent to those approved by such department, for similar uses, of any materials of such nature or temperature as can contaminate any water supply, interfere with bacterial processes in sewage treatment or otherwise cause the emission of dangerous or offensive elements. All discharges shall comply with all applicable City ordinances.

Division 5. Procedures

Sec. 9.04.050. General Procedures

(a) Purpose. The purposes of this division are to:

(1) Establish the appropriate workflows associated with each land development process, and

(2) Ensure that processes comply with state law, and

(3) Assign decision-making authority, completeness review, and deadlines to ensure that the processes are efficient and fair to applicants, and

(4) For discretionary or legislative decisions, provide notice and an opportunity to be heard by persons affected by the application.

(b) General Procedural Requirements.

(1) Applicability. This Section establishes rules and procedures for specific land use decisions under the jurisdiction of the City Council, Planning and Zoning Commission, Board of Adjustment, and City Staff (where applicable), and administrative decisions.

(2) Procedures. This Section sets up rules for procedures, such as notices and public hearings. It then describes the process for specific land use decisions. The procedures have a common workflow and description per Table 35: Procedural Components.

Table 35: Procedural Components

Component	Meaning
Applicability	The type of development or situation that is subject to the process.
Initiation	This is how the applicant begins the process, including which department or official receives the application.
Completeness	This is how the City determines that the application has sufficient information to be processed.
Notice and Hearings	This describes the type of notice, how it is provided, and the conditions of any applicable required public hearings.
Decision	This states who approves the application and the type of proceeding that leads to the decision.
Standards	These are any standards that apply to the application. All applications are subject to this Zoning Ordinance.
Subsequent Applications	If an application is denied, some processes have a waiting period before that type of application can be resubmitted for the property.
Appeals	This provides a way to review an application that is denied or that has conditions that the applicant disagrees with.
Scope of Approval	This indicates what activity the application authorizes. For example, some approvals send the applicant to the next step in the overall process, while others authorize construction or use.
Recordkeeping	This states how the formal decision of approval is maintained.

(3) Authority Table. Table 36: Authority Table summarizes the major review procedures for land use applications and development activity in the City's corporate limits and who acts on those

applications. Not all procedures addressed in this article are summarized in this table (see subsequent sections of this Division for additional details on each procedure).

Table 36: Authority Table

Application Type	Notice				Authority			
	Publication	*Mail*	*Website*	*Signs*	*Director*	*PZ Commission*	*City Council*	*Board of Adjustment*
Rezoning	Y	Y	Y	Y	R	R	D	-
Specific Use Permit	Y	Y	Y	Y	R	R	D	-
Text Amendment	Y	Y***	Y	-	R	R	D	-
Concept Plan*	N	N	N	N	DR	AD	A	-
~~Preliminary Site Plan**~~	~~N~~	~~N~~	~~N~~	~~N~~	~~R~~	~~D~~	~~A~~	~~-~~
Site Plan	N	N	N	N	D	A	-	-
Variance	N	N	N	N	R	-	-	D
Interpretation	N	N	N	N	D	-	-	A
Key	Y = Yes | N = No | R = Review and Recommend | D = Decision *(a decision includes the review of the application)* | A = Appeal Decision							
Notes	* = Any Concept Plan associated with a rezoning or specific use permit request requires a Planning & Zoning (PZ) Commission recommendation followed by City Council approval. ~~** = Any Preliminary Site Plan associated with a rezoning or specific use permit request requires a Planning & Zoning (PZ) Commission recommendation followed by City Council approval.~~ *** = If a text amendment to land uses would change an existing business/ property to a non - conforming land use, the property owner and tenant must be notified.							

(c) Pre-Application.

(1) Applicability. These requirements apply to any application if the applicant elects to request a Pre-Application Meeting with the City.

(2) Initiation. Before filing an application subject to this section, the applicant shall request a meeting with the Staff Committee concerning the plans and data as specified in this Zoning Ordinance.

(3) Staff Committee. The purpose of the Staff Committee is to assist an applicant prior to the submittal of an application, to coordinate the technical aspects of development, and to advise the City Manager concerning planning and development issues.

~~(A)~~ The Staff Committee is composed of the following departments, members, or their representatives from Development Services, Public Works, & the Fire Department.~~:~~

~~(i) The Director~~

~~(ii) The City Engineer~~

~~(iii) The City Building Official~~

~~(iv)~~(A) ~~The City Fire Marshal~~

(B) The Staff Committee may request the assistance of other staff members and agency representatives.

(4) Scheduling. Any applicants wishing to discuss a development proposal with the Staff Committee shall advise the Director at least seven (7) calendar days prior to the meeting.

(5) Pre-Application Meeting.

~~(A)~~ Prior to submission of applications for filing, a pre-application meeting (PAM) and formal application review meeting (FARM) are required, unless waived by the Development Services Director or designee. Both PAM and FARM meetings are conducted under the direction and authority of the Development Services Director, or his or her designee, who will invite appropriate staff to each meeting based on the unique circumstances of the specific project application. The pre-application meeting does not constitute the filing of a site plan, permit, plat, or development application of any type and do not create or establish vested rights as regulated by the Texas Local Government Code. Their purpose is to give applicants an opportunity to ask questions, identify issues early, and expedite the due diligence exploration and application checklist review processes, not to approve, commit to, or lock in any plan. The Development Services Director may establish policies and procedures not inconsistent with these regulations including but not limited to flow charts, forms, applications, or checklists to accomplish the purposes outlined herein. ~~The Pre-Application Meeting shall include the following:~~

~~(i) A discussion of the general project consistency with this Zoning Ordinance and the Comprehensive Plan,~~

~~(ii) A discussion of technical studies, plans, and other information deemed relevant to the specific application request, and~~

~~(iii) Discussion of the anticipated level of citizen interest.~~

~~(B) The applicant shall provide a brief overview of the project, including proposed location, uses, densities, project layout, and design features.~~

~~(C) The Director will provide information and comments at the Pre-Application Meeting, but will not take formal action on the application. In addition to provision of verbal information, the Director may provide a Pre-Application Meeting checklist.~~

~~(D)~~(A) ~~The applicant's and Staff Committee's comments are for purposes of information, but are not binding on either the City or the applicant.~~

(6) Documentation.

(A) During the meeting, the Director may review and complete an informational checklist, based on the scope of the application.

(B) The Director will record in writing and provide the applicant with any pertinent information concerning the project scope, as described by the applicant, as well as verbal guidance provided by City staff.

(d) Submitting Applications.

(1) General Requirements.

(A) Applications filed under this Zoning Ordinance must include the information required in any applicable checklist.

(B) The City Council may establish fees for all applications required in this Zoning Ordinance by resolution.

(2) Completeness Review.

(A) The Director will not process incomplete applications.

(B) An application is not complete until all required items are submitted (see the application's checklist).

(C) When applications are filed, the Director will review them for completeness.

(D) The time period to process an application does not commence until the Director determines that the application is properly submitted and the applicant has corrected any deficiencies in the application.

(E) Review for completeness of application forms is solely to determine whether information required for submission with the application is sufficient to allow further processing.

(F) The Director will determine whether the application is complete and will transmit the determination to the Applicant. If the Director determines that the application is not complete, the Director will specify those parts of the application that are incomplete and will indicate how they can be made complete, including a list and description of the information needed to complete the application. The Director and the decision-making body are not obligated to further review the application until the required information is corrected. For applications subject to Sec. 9.04.051 and Sec. 9.04.052, the application is not considered filed and is denied.

(G) The Director or the approving authority may provide submission deadlines for materials required in support of any application provided for in any checklist. Compliance with those deadlines is required to have the application placed on an agenda to be heard by the approving authority.

(e) Noticing.

(1) Generally.

(A) This Zoning Ordinance, in conjunction with those regulations set by State law, establishes various requirements for public notice.

(B) Noticing shall meet the minimum requirements established in Texas Local Government Code § 211.007(c), including the 200-foot notification and 20% protest requirements.

(C) Table 37: Notice Type, along with (2) below, describes the various types of notice and their contents. More specific notice requirements may be prescribed in each procedural section.

Table 37: Notice Type

Notice Type	Description
Publication	The Director will publish in an official newspaper or a newspaper of general circulation in the City.
Mail	The Director will mail the notices. Notice is served by its deposit in the City, properly addressed with postage paid, in the United States mail. Regular mail is sufficient, unless certified mail is required by a specific process or state law
Electronic	The City may communicate with the applicant or persons requesting notice by electronic transmission. Electronic transmission may include email, or communication through social media or online notification procedures established by the Director.

(2) Required Information. Notice shall include the following information, unless the process includes a different requirement:

(A) A synopsis of the proposed ordinance or application;

(B) Time, date, and place of the public hearing or meeting;

(C) The type of land use or development decision that is being considered;

(D) If a public hearing is required, a statement that at the time and place of the hearing all persons who desire will have an opportunity to be heard in opposition to or in favor of the ordinance or application;

(E) A point of contact within Development Services; and

(F) Development Services' website address (URL).

(3) Notice Sign Posting.

(A) One sign shall be posted on the property to be rezoned. Dimensions shall meet the minimum requirements established in Texas Local Government Code § 211.

(B) This sign(s) shall, if possible, be located adjacent to streets.

(C) This sign(s) shall be erected no less than 10 days before the Planning & Zoning Commission holds a public hearing and shall be removed within 15 days after final action by the City Council or when the applicant withdraws the request, whichever comes first.

(D) The sign shall contain a notice of a zoning change and the telephone number of the public office from whom dates of public hearings may be obtained.

(4) Failure to Provide Notice. The failure to provide any notice not otherwise required under State law does not affect the validity of any action undertaken pursuant to this Zoning Ordinance, and no person may challenge an action for lack of notice where the City has complied with the applicable State law governing notice.

(f) Staff Review.

(1) Review by Other Departments and Agencies. The staff may forward copies of the application to various local, state and/or federal agencies and departments for their review and comment. The Director may ask the reviewers to respond in writing or attend an application review meeting with the staff.

(2) Staff Review. The staff shall review the application and supporting information. This may occur in a meeting with the applicant and representatives of other agencies or departments, as described in (1) above. After reviewing the information, staff shall prepare a report summarizing the information for the reviewing bodies and providing a recommendation for action and any proposed conditions. The applicant or other interested parties may obtain a copy of the staff report from the department before the hearing at which the application is scheduled to be heard.

(3) Staff Report. If an individual section of this Division (and where permitted by state law) delegates to staff the authority to approve, approve with conditions, or deny an application, the staff report may include a written decision to that effect.

(g) Decision-Making and Public Hearings.

(1) Purpose. The purpose of a public hearing is to allow the applicant and all other interested parties a reasonable and fair opportunity to be heard, to present evidence relevant to the application, and to rebut evidence presented by others.

(2) Rules of Procedure. The City Council and Planning and Zoning Commission may adopt rules of procedure for public hearings.

(3) Action. Reviewing bodies shall hold regularly scheduled public hearings to receive and review public input on items required by this Zoning Ordinance. Decisions and recommendations should be rendered in a timely manner, based upon the specific requirements of these regulations and following:

(A) Conformance with these regulations, the comprehensive plan, and other adopted plans, design guidelines and policies;

(B) Recommendations of staff and recommending bodies;

(C) Input of reviewing agencies and departments;

(D) Public comment and testimony received at the hearing; and

(E) Effects of the proposal on the neighborhood, area, and community-at-large.

(4) Authority to Condition Development Approvals.

(A) After review of the application, other pertinent information or documents, and any evidence made part of the public record, the recommending and decision-making bodies may impose conditions that are reasonably necessary to assure compliance with applicable general or specific standards expressed in these regulations.

(B) The Director shall include a copy of the conditions with the record of decision.

(C) The applicant shall be notified of any conditions imposed on the application.

(h) Tabling.

(1) Purpose. This section allows for the tabling of applications as needed to collect additional information, or to engage in further review.

(2) Applicant Request. An applicant may request to table any application in writing for a future meeting date.

(3) Director Request. The Director may request to table any application for further review and consideration. In that case, the Director shall provide notice and explanation to the applicant in writing before the meeting at which the application is scheduled for hearing. Notice of the tabling will be given at the beginning of the scheduled meeting.

(i) Application Withdrawal.

(1) Generally. An application may be withdrawn at any time prior to formal consideration by the reviewing body.

(2) Fees. Withdrawal of an application after the determination of completeness results in the forfeiture of fees.

(3) No Public Hearing Required. If no public hearing is required, the applicant should give notice of the withdrawal to the Director at the earliest possible time. This allows the Director to notify other applicants of an agenda change.

(4) Public Hearing Required. If a public hearing is required, an applicant may request a withdrawal from the Director at any time prior to the opening of the hearing. Once the public hearing is opened, the reviewing body shall decide whether to approve the request and may instead act on the application.

(j) Scope of Approval.

(1) Generally. The reviewing body may take any action on the application that is consistent with the notice given, including approval of the application, conditional approval of the application, or denial of the application.

(2) Amendments. The reviewing body may allow amendments to the application if the effect of the amendment is to reduce the density or intensity of the original application, reduce the impact of the development, or reduce the amount of land involved from that indicated in the notices of the hearing. The reviewing body may not permit a greater amount of development, a more intensive use, a larger area of land than indicated in the original application, or a greater variance than was indicated in the notice.

(k) Protest Against Change. In case of a protest against a change signed by the owners of 20% or more either of the land included in the proposed change, or of the land within 200 feet of the subject property, excluding any intervening public street, an amendment shall not become effective unless by a favorable vote of ¾ of all the members of the City Council present and qualified to vote.

(l) Post-Decision Proceedings.

(1) Minor Revisions.

(A) The Director may approve minor revisions to the terms of an application approval. “Minor revisions” are those that are necessary in light of technical considerations discovered after the decision on the development application, and which do not substantively change the character of the development approval.

(B) Minor revisions must be authorized in writing.

(C) Minor revisions are subject to appeal to the Planning and Zoning Commission. On appeal, no further action will be taken to process the application, and/or issued permits are stayed pending the Planning and Zoning Commission’s determination.

(2) Major Revisions.

(A) A major revision is any revision that the Director determines is not a minor revision.

(B) A major revision is approved by the original decision-maker and is required in accordance with the procedures established for the original consideration of the application.

(C) In making a determination, the Director may seek a recommendation from any recommending body involved in the original application process.

(m) Appeals.

(1) Generally. A party with standing may seek judicial review pursuant to Texas Local Government Code § 211.011.

(2) Appeals to the City Council.

(A) Appeals may be taken to and before the City Council by any person aggrieved, or by any officer, department, board, or bureau in the City for any previous decision not made.

(B) An appeal shall be made by submitting to the City Secretary a notice of appeal and specifying the appeal’s grounds.

(C) The office or department from which the appeal is taken shall transmit to the City Council all of the papers constituting the record from which the action appealed was taken.

(D) An appeal shall stay all proceedings in furtherance of the action appealed from unless the building inspector shall certify to the City Council that, by reason of facts in the certificate, a stay would cause imminent peril to life or property, in which case proceedings shall not be stayed otherwise than by a restraining order which may be granted or by a court of equity, after notice to the office from whom the appeal.

(E) The City Council shall fix a reasonable time for the hearing of the appeal or other matter referred to it, and shall mail notices of that hearing to the petitioner and to the owners of property lying within 200 feet of any point of the lot or portion thereof on which an appeal is desired, and to all other persons deemed by the board to be affected by the appeal. These owners and persons shall be determined according to the current tax rolls of the City.

Sec. 9.04.051. Entitlement and Ordinance Procedures

(a) Rezoning.

(1) Applicability. This section applies to the change in the zoning classification of individual properties.

(2) Initiation. A rezoning may be initiated by:

(A) City Council;

(B) The Planning and Zoning Commission; or

(C) Request by owner or agent of owner of property to be changed.

(3) Completeness. See Sec. 9.04.050(d)(2).

(4) Notice and Hearing(s).

(A) Noticing shall comply with Sec. 9.04.050(e) and Texas Local Government Code § 211.007(c), as applicable.

(B) Two public hearings are required and shall comply with Sec. 9.04.050(g).

(5) Decision.

(A) Director Review. The Director shall review the rezoning and may provide a recommendation to the Planning and Zoning Commission to:

(i) Approve the rezoning, or

(ii) Deny the rezoning.

(B) Planning and Zoning Commission Recommendation. The Planning and Zoning Commission shall conduct a public hearing on the rezoning. The Planning and Zoning Commission shall submit its recommendation to the City Council:

(i) To approve the rezoning, or

(ii) To deny the rezoning, or

(iii) To approve the rezoning with conditions.

(C) City Council. The City Council shall consider the rezoning at a public hearing after a recommendation has been provided by the Planning and Zoning Commission. After the hearing is closed, the City Council shall, by ordinance:

(i) Approve the rezoning, or

(ii) Deny the rezoning, or

(iii) Approve the rezoning with conditions.

(6) Standards. In its review of an application for rezoning, the City Council shall consider the following standards. No single factor is controlling. Instead, each is weighed in relation to the other standards. If the Planning and Zoning Commission finds that a rezoning is inconsistent with the land use element of the comprehensive plan, the application shall not be considered until a recommendation regarding a comprehensive plan amendment for the proposed zoning

~~***Figure 13: Rezoning Flowchart***~~

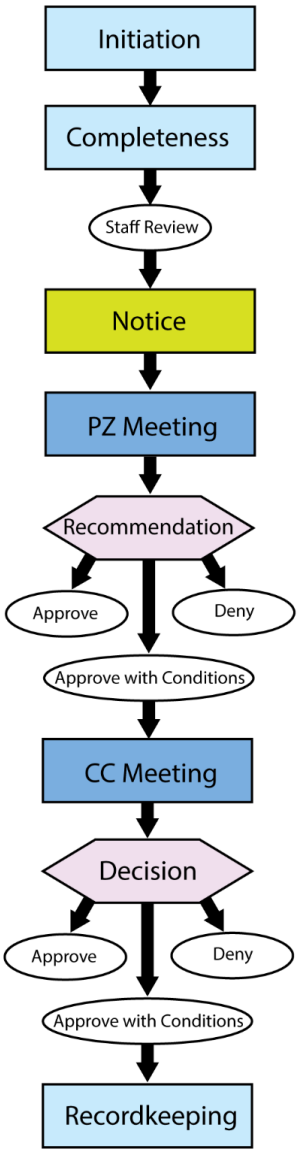

amendment is forwarded to the City Council, either prior to or concurrently with the proposed zoning amendment.

(A) Consistency. The City Council does not redetermine the City's policy of comprehensive zoning. The City's zoning map shall not be altered for the special benefit of the landowner when the change will cause substantial detriment to the surrounding lands or serve no substantial public purpose.

(B) Adverse Impacts on Neighboring Lands. The City Council shall consider the nature and degree of an adverse impact upon neighboring lands. Lots shall not be rezoned in a way that is substantially inconsistent with the uses of the surrounding area, whether more or less restrictive. Further, the City Council finds and determines that vast acreages of single-use zoning produce uniformity with adverse consequences such as traffic congestion, air pollution, and social alienation. Accordingly, rezonings that promote mixed uses subject to a high degree of design control are not necessarily deemed to be inconsistent with neighboring lands and shall be considered.

(C) Suitability as Presently Zoned. The City Council shall consider the suitability or unsuitability of the tract for its use as presently zoned. This factor, like the others, must often be weighed in relation to the other standards, and instances can exist in which the use for which land is zoned may be rezoned upon proof of a real public need or substantially changed conditions in the neighborhood.

(D) Health, Safety, and Welfare. The rezoning must bear a substantial relationship to the public health, safety, morals, or general welfare or protect and preserve historic and cultural places and areas. The rezoning may be justified, however, if a substantial public need exists, and this is so even if the private owner of the tract will also benefit.

(E) Public Policy. A strong public policy in favor of rezoning may be considered. Examples include a need for affordable housing, economic development, recreational activity, or mixed-use ~~development~~building, which functionally relates to the surrounding neighborhoods.

(F) Size of Tract. The City Council shall consider the size, shape, and characteristics of the tract in relation to the affected neighboring lands. Proof that a small tract is unsuitable for use as zoned or that there have been substantial changes in the immediate area may justify a rezoning.

(G) Other Factors. The City Council may consider any other factors relevant to a rezoning application under Texas law.

(7) Subsequent Applications.

(A) This subsection applies if:

(i) The applicant withdraws an application after notice of hearing is published, or

(ii) The City Council denies a zoning or rezoning application.

(B) If the above requirements apply, the applicant shall not submit a rezoning application for the same zoning district request on the same property for at least six (6) months.

(C) The above waiting period begins with the date of the City Council's denial of the prior application.

(8) Appeals. Not applicable.

(9) Scope of Approval. The approval of a rezoning does not authorize the development of land. A rezoning allows the applicant to apply for a building permit or concept plan, in the case of uses

permitted as of right, or a specific use permit, in the case of uses designated as special uses within the applicable zoning district.

(10) Recordkeeping. If the amendment involves changes to the existing zoning district boundaries, the form of the amending ordinance shall contain a narrative description of the land to be reclassified or reference to an accompanying plat of such land showing the new zoning districts and indicating their boundaries. The Director shall refer to the attested ordinance as a record of the current zoning status until the zoning map is changed accordingly.

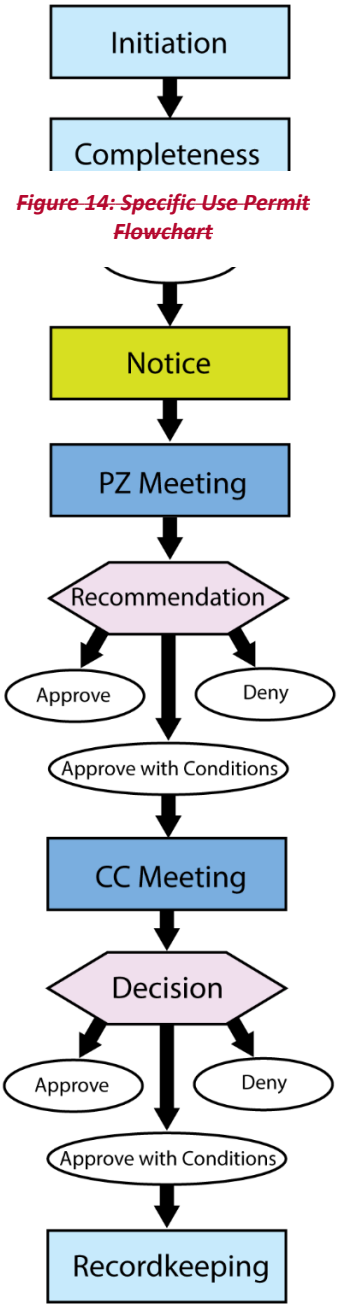

Figure 14: Specific Use Permit Flowchart

(b) Specific Use Permit.

(1) Applicability. This section applies to any application for approval of a use designated as a specific use in Table 19: Use Table.

(2) Initiation. The owner or agent of the owner of the property may initiate a specific use permit.

(3) Completeness. See Sec. 9.04.050(d)(2).

(4) Notice and Hearing(s).

(A) Noticing shall comply with Sec. 9.04.050(e) and Texas Local Government Code § 211.007(c), as applicable.

(B) Two public hearings are required and shall comply with Sec. 9.04.050(g).

(5) Decision.

(A) Generally. All hearing and notification procedures shall comply with Texas Local Government Code § 231.109, as applicable.

(B) Director Review. The Director shall review the specific use permit and shall provide a recommendation to the Planning and Zoning Commission to:

(i) Approve the specific use permit, or

(ii) Deny the specific use permit, or

(iii) Approve the specific use permit with conditions.

(C) Planning and Zoning Commission Recommendation. The Planning and Zoning Commission shall conduct a public hearing on the specific use permit. The Planning and Zoning Commission shall submit its recommendation to the City Council:

(i) To approve the specific use permit, or

(ii) To deny the specific use permit, or

(iii) To approve the specific use permit with conditions.

(D) City Council Decision. The City Council shall consider the specific use permit at a public hearing after a recommendation has been provided by the Planning and Zoning Commission. After the hearing is closed, the City Council shall by ordinance:

(i) Approve the specific use permit, or

(ii) Deny the specific use permit, or

(iii) Approve the specific use permit with conditions.

(6) Standards. The City Council will approve a specific use permit only if the applicant demonstrates that:

(A) The proposed specific use shall comply with all regulations of the applicable zoning district, the provisions of Division 2, any applicable use regulations of Division 3, and any applicable development standards of Division 4 of this Zoning Ordinance.

(B) The proposed specific use permit does not have a probable effect on the adjacent property and the community welfare with appropriate regard to the health, safety, and welfare of the general public.

(C) The proposed use shall not be noxious or offensive by reason of vibration, noise, odor, dust, smoke, or gas.

(D) The proposed use shall not injure the use and enjoyment of the property in the immediate vicinity for the purposes already permitted nor substantially diminish or impair the property values within the neighborhood.

(E) The public interest and welfare supporting the proposed specific use authorization shall be sufficient to outweigh the individual interests that are adversely affected by the establishment of the proposed use.

(7) Subsequent Applications.

(A) This subsection applies if:

(i) The applicant withdraws an application after notice of hearing is published, or

(ii) The City Council denies a specific use permit application.

(B) If the above requirements apply, the applicant shall not submit a specific use permit application for the same specific use permit request on the same property for at least six (6) months.

(C) The above waiting period begins with the date of the City Council's denial of the prior application.

(8) Appeals. Not applicable.

(9) Scope of Approval.

(A) Generally. The approval of a specific use permit does not authorize the development of land. A specific use permit allows the applicant the right to apply for a building permit, plat, and/or site plan.

(B) Violations. Any specific use permit is in violation of this Zoning Ordinance and shall be suspended or revoked if:

(i) A court with jurisdiction or a jury finds the holder of the specific use permit guilty of a violation or if a holder of a specific use permit pleads guilty of violating.

(ii) Any requirement or term or condition of the specific use permit or has not conformed, at any time, with any or all of the requirements or terms or conditions as set out in the specific use permit as approved by the City Council.

(iii) The activity authorized by the specific use permit commences prior to the institution of all conditions imposed by the specific use permit.

(iv) The use for which the specific use permit was authorized does not commence within 6 months of the effective date of the specific use permit. The Director may grant an extension of up to 6 months for good cause shown, upon petition of the specific use permit holder.

(v) The use for which the specific use permit is authorized is discontinued for 6 consecutive months.

(C) Notification. If the use discontinues or fails to commence as stipulated in this Zoning Ordinance, the Director will issue written notification to the property owner. Ten (10) days after issuance of this notice, the Director shall issue the permit holder written notification of the specific use permit's official revocation and removal from the Zoning Map.

(10) Recordkeeping.

(A) The specific use permit shall contain a narrative description if the specific use permit is only associated with a portion of a tract of land to be reclassified or reference to an accompanying plat if the specific use permit is associated with the entire tract of land.

(B) A certified copy of all ordinances authorizing a specific use permit pursuant to this section shall be recorded by and at the expense of the applicant in the name of the property owner as grantor in the Collin County Clerk.

(c) Zoning Ordinance Text Amendment.

~~*Figure 15: Zoning Ordinance Text Amendment*~~

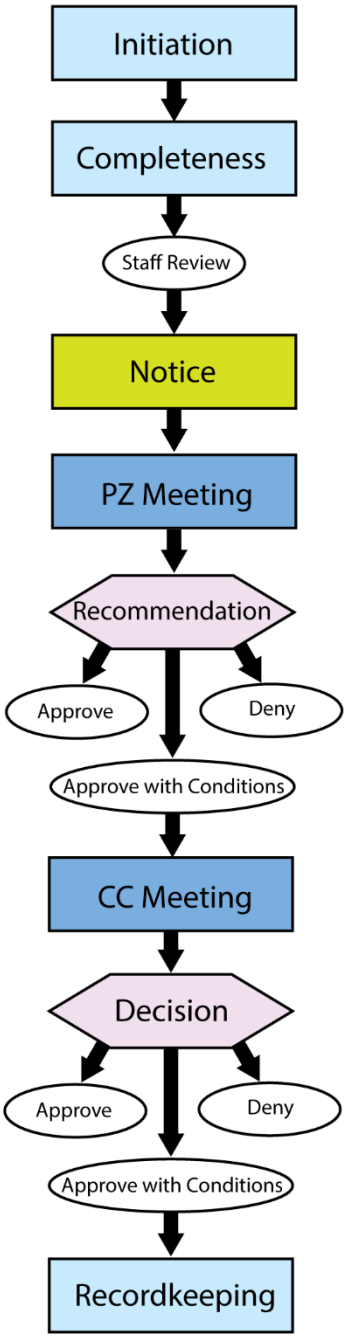

(1) Applicability. This section applies to any action of the City Council to amend or change the regulations of this Zoning Ordinance. This includes the regulations, restrictions, and boundaries or classification of property contained within this Zoning Ordinance or a change to the Zoning Map initiated by the City Council.

(2) Initiation. A text amendment may be initiated by:

(A) City Council;

(B) City staff;

(C) The Planning and Zoning Commission; or

(D) Application of any resident, property owner, or business owner within the City.

(3) Completeness. See Sec. 9.04.050(d)(2).

(4) Notice and Hearing(s).

(A) Noticing shall comply with Sec. 9.04.050(e) and Texas Local Government Code § 211.007(c), as applicable.

(B) Two public hearings are required and shall comply with Sec. 9.04.050(g).

(5) Decision.

(A) Generally. All hearing and notification procedures shall comply with Texas Local Government Code § 231.109, as applicable.

(B) Planning and Zoning Commission Recommendation. The Planning and Zoning Commission shall conduct a public hearing on the text amendment. The Planning and Zoning Commission shall submit its recommendation to the City Council:

(i) To approve the text amendment,

(ii) To deny the text amendment, or

(iii) To approve the text amendment with revisions.

(C) City Council Decision. The City Council shall consider the text amendment at a public hearing after a recommendation has been provided by the Planning and Zoning Commission. After the hearing is closed, the City Council shall by ordinance:

(i) Adopt the text amendment,

(ii) Deny the text amendment,

(iii) Approve the text amendment with revisions, or

(iv) Remand the text amendment to the Planning and Zoning Commission.

(6) Standards. A text amendment is a legislative decision subject to the City Council's discretion. The City Council may approve the text amendment if it:

(A) Is consistent with the comprehensive plan, and

(B) Promotes public health, safety, and general welfare.

(7) Subsequent Applications. Not applicable.

(8) Appeals. Not applicable.

(9) Scope of Approval. The approval of a text amendment does not authorize the development of land. A text amendment allows property owners to apply for permits or actions consistent with its standards and requirements.

(10) Recordkeeping. The Zoning Ordinance's text amendment shall be codified and published as part of the Anna Code of Ordinances by the City Secretary.

Sec. 9.04.052. Site Planning Procedures

(a) Generally.

(1) Overview.

~~(A) This section establishes a site plan review process for land development. The process involves a series of three plans, progressing from a general evaluation of a site and development concept to approval of a detailed development plan.~~

~~(B)~~(A) The ~~first plan in the series is a~~ concept plan~~. This plan~~ establishes a general schematic for site development, primarily focusing on vehicular access and circulation. Concept plans may be used to separate large properties into parts for phasing site planning and development.

~~(C) The second plan in the series is a preliminary site plan. This plan presents more detailed information on building layout, parking, drives, landscaping, screening, and other site improvements. Preliminary site plan approval assures the applicant that the general layout is acceptable before proceeding with detailed engineering and design.~~

~~(D)~~(B) Site plan approval is the final step in the process. A site plan is a detailed, scaled drawing of all surface improvements, structures, and utilities proposed for development. Site plan approval is required before engineering plans and building permits are released.

~~(E)~~(C) Concept plans~~, preliminary site plans,~~ and/or site plans that are submitted as a part of a rezoning or specific use permit request require review and approval by the Planning and Zoning Commission and City Council.

~~(F)~~(D) Concept plans~~, preliminary site plans,~~ and/or site plans that contain land uses that are in conformance with existing zoning require review and approval by staff unless otherwise stated in this Article~~the Planning and Zoning Commission~~.

~~(G) Site plans may be approved by City staff provided that they conform to preliminary plans for the development approved by either the Planning and Zoning Commission or City Council.~~

(2) Purpose. The purpose of this process is to:

(A) Ensure compliance with adopted City development regulations and other applicable regulations for which the City has enforcement responsibility.

(B) Promote safe, efficient, and harmonious use of land through the application of City-adopted design standards and guidelines.

(C) Promote stormwater quality planning into the site planning process.

(D) Protect and enhance the City's environmental and aesthetic quality.

(E) Ensure adequate public facilities to serve development.

(F) Prevent or mitigate adverse development impacts, including overcrowding and congestion.

(G) Aid evaluation and coordination of land subdivision.

(3) Applicability. The site plan review process shall apply to:

(A) Development within an area zoned planned development. (See Sec. 9.04.026)

(B) Nonresidential development.

(C) Multifamily residential development.

(D) Two-family dwelling and single-family dwelling, attached residential use developments and any mixed single-family dwelling, detached residential development that contains single-family dwelling, attached residential dwellings.

(E) Manufactured home parks.

(F) Parking lot development, reconstruction, or restriping of more than 20 spaces.

(G) Single-Family or Duplex Home Parks.

(4) Exemptions. The following types of development are exempted from the requirements of this section.

(A) Detached single-family residential dwellings.

(B) Agricultural buildings.

(C) Temporary uses and structures permitted under Sec. 9.04.039.

(5) Submitting Applications.

(A) Before preparing a concept plan~~, preliminary site plan,~~ or site plan, the applicant shall meet with the City as required in Sec. 9.04.050(c). The purpose of the meeting is to review potential site design before formal submittal. A pre-application meeting checklist can be obtained from the City Planning & Development webpage.

(B) Applications for approval of plans required by this Article must be submitted to the Director. A calendar of official submittal dates for items requiring Planning and Zoning Commission and City Council approval shall be published by the City 30 days prior to the beginning of each year. All applications received on a date other than an official submittal date shall be scheduled for consideration on the next official submittal date. An application or plan is considered filed on the date the applicant delivers the application or plan to the Development Services Department or deposits the application or plan with the United States Postal Service by certified mail addressed to the Development Services Department. Complete applications requiring Planning and Zoning Commission and City Council approval shall be placed on the meeting agenda of the Planning and Zoning Commission no later than 28 days following the official date of submittal. Items authorized for staff approval may only be submitted at any time during normal office hours. Complete applications authorized for staff approval shall be acted upon by the Director within 30 days (see Sec. 9.04.052(g)).

(6) Fees, Forms, and Procedures.

(A) Fees shall be established in accordance with Sec. 9.04.003(c).

(B) The Director may establish procedures, forms, and standards with regard to the content, format, graphics, and number of copies of information constituting an application for concept plans~~, preliminary site plans,~~ and site plans for clarity and consistency of operations. The published procedures, forms, and standards will have the force of ordinance as if fully incorporated herein.

(C) All site planning checklists of items to be included can be obtained from the City.

(b) Concept Plan.

(1) Generally. A concept plan ~~is the initial plan required in the site plan review process. This plan~~ is a general site assessment and development concept. A concept plan defines a basic schematic design for development. The purpose of a concept plan is to:

(A) Evaluate the site's natural condition, including vegetation, topography, drainage, surface, and subsurface factors affecting the site's development.

(B) Determine building sites and the use, intensity, bulk, and height of structures to be constructed.

(C) Locate public streets and rights-of-way, and determine points of ingress and egress between the development and public streets, including median breaks and turn lanes.

(D) Determine primary routes of vehicular circulation and parking areas internal to the development.

(E) Delineate development phasing.

(F) Other purposes related to the establishment of a planned development district. (See Sec. 9.04.026)

~~*Figure 16: Concept Plan Flowchart*~~

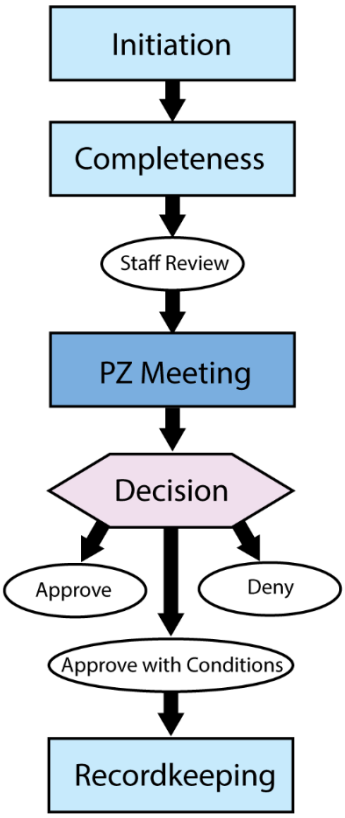

(2) Applicability.

(A) Properties within a Planned Development.

(i) Except as provided below, a concept plan is required for all development within an area zoned planned development.

(ii) The concept plan must include all property contained within a planned development district.

(B) Properties Outside a Planned Development.

~~(i)~~ The plan must include all contiguous property of common ownership outside of a planned development district unless the site is an approved platted lot.

~~(ii) A preliminary site plan may be submitted in lieu of a concept plan (see Sec. 9.04.052(c)).~~

(3) Application Procedure and Requirements.

(A) Pre-Application. Before preparing a concept plan, the applicant shall meet with the City as required in Sec. 9.04.050(c).

(B) Submitting Applications. The property owner or listed project representative shall file an application for the approval of a concept plan as required in Sec. 9.04.050(d).

(C) Standards of Approval.

(i) The Planning & Zoning Commission and City Council may approve, conditionally approve, table, or deny a concept plan based on the plan's:

a. Compliance with the Comprehensive Plan.

b. Compliance with the Zoning Ordinance and other applicable Planning and Development Regulations.

c. Impact on the site's natural resources and effect on adjacent area, property, and land use.

(ii) Concept plans that are submitted as a part of a rezoning or specific use permit request require City Council approval.

(D) Effect. Approval of a concept plan by either the Planning and Zoning Commission or City Council constitutes authorization by the City for the property owner to submit an application for approval of a ~~preliminary~~ site plan subject to compliance with any condition attached to the approval of the concept plan. As long as the concept plan remains valid, the location of streets, drives, median breaks, and curb cuts shall remain fixed and any subsequently prepared plan for an adjacent property or property located on the opposite face of a public street abutting the site shall coordinate its circulation system to the earlier approved, valid concept plan. Except when authorized, a concept plan may not be used to approve a variance to development regulations. Where an approved plan conflicts with an adopted regulation and no variance or exception is expressly approved, the regulation shall apply. Where approved, valid concept plans delineate areas as separate phases of development, each phase may be independently planned and developed provided that it is in accordance with the concept plan and other applicable regulations.

~~(E)~~ Lapse. Concept plan approval shall expire 2 years following the date of its original approval.

~~(c) Preliminary Site Plan.~~

~~(1) Generally. A preliminary site plan is the second plan in the site plan approval process. The purpose of the plan is to:~~

~~(A) Ensure compliance with applicable development regulations and previously approved, valid plans affecting development of the property.~~

~~(B) Determine the placement, configuration, coverage, size, and height of buildings.~~

~~(C) Determine the design of public street improvements and rights-of-way, the design and location of drives, aisles, and parking.~~

~~(D) Determine the location and preliminary design of open space, landscaping, walls, screens, and amenities.~~

~~(E) Determine the preliminary design of drainage facilities and utilities.~~

~~(2) Applicability.~~

~~(A) Generally. Except as provided in Sec. 9.04.052(d)(2), an approved, valid preliminary site plan shall be required prior to the consideration of a site plan.~~

~~(B) Properties within Planned Development. The preliminary site plan must include all property contained within a planned development district, except as permitted as a freestanding phase of development shown on an approved, valid concept plan.~~

~~***Figure 17: Preliminary Site Plan Flowchart***~~

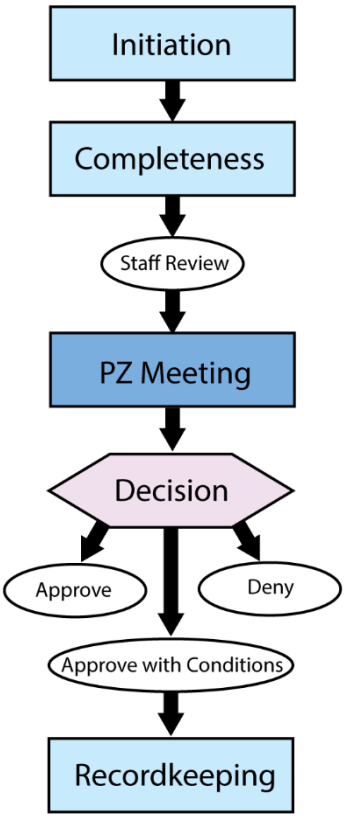

~~(C) Properties Outside a Planned Development. For property outside of a planned development district, the plan must include all contiguous property of common ownership unless the site is an approved platted lot or as permitted as a freestanding phase of development shown on an approved, valid concept plan.~~

~~(3) Application Procedures and Requirements.~~

~~(A) Pre-Application. Before preparing a preliminary site plan, the applicant shall meet with the City as required in Sec. 9.04.050(c).~~

~~(B) Standards of Approval.~~

~~(i) The Planning and Zoning Commission and City Council may approve, conditionally approve, table, or deny a preliminary site plan based on:~~

~~a. Conformance with the Comprehensive Plan.~~

~~b. Compliance with the Zoning Ordinance and other applicable Planning and Development Regulations and previously approved, valid plans for the property.~~

~~c. Compliance with a previously approved, valid site-specific stormwater quality plan.~~

~~d. Impact on the site's natural resources and effect on adjacent and area property and land use.~~

~~e. Safety and efficiency of vehicular and pedestrian circulation, traffic control, and congestion mitigation.~~

~~f. Safety and convenience of off-street parking and loading facilities.~~

~~g. Access for firefighting and emergency equipment to buildings.~~

~~h. Use of landscaping and screening to shield lights, noise, movement, or activities from adjacent properties and to complement the design and location of buildings and parking.~~

~~i. The location, size, and configuration of open space areas to ensure that such areas are suitable for intended recreation and conservation uses.~~

~~(ii) Preliminary site plans that are submitted as a part of a rezoning or specific use permit request require City Council approval.~~

~~(C) Effect. Approval of a preliminary site plan by the Planning and Zoning Commission or City Council shall constitute authorization by the City for the owner to submit an application for final site plan approval for development of the entire site or a portion thereof provided that the site plan conforms to the preliminary site plan and any conditions attached to its approval. As long as the preliminary site plan remains valid, the location of buildings, landscaped areas, open space, streets, drives, fire lanes, median breaks, curb cuts, and parking shall remain fixed except to permit minor adjustments resulting from subsequent engineering improvements or to prevent a condition affecting public health or safety which was not known at the time of approval. Except where authorized by ordinance, a preliminary site plan may not be used to approve an exception to development regulations. Where an approved plan conflicts with an adopted regulation and no variance or exception is expressly approved, the regulation shall apply.~~

~~(D) Lapse. The approval of a preliminary site plan shall be effective for a period of 2 years from the date that the preliminary site plan is approved by the Planning and Zoning Commission or City Council, at the end of which time the applicant must have submitted and received approval of a site plan. If a site plan is not approved within 2 years, the preliminary site plan approval is null and void. If site plan approval is only for a portion of the property, the approval of the preliminary site plan for the remaining property shall be null and void. The applicant shall submit a new preliminary site plan for review and approval subject to the existing regulations.~~

~~(d)~~(c) Site Plan.

(1) Generally. A site plan is ~~the final plan required in the site plan approval process. The site plan is~~ a detailed plan of the public and private improvements to be constructed. The purpose of the plan is to:

(A) Ensure compliance with applicable development regulations and previously approved, valid plans affecting the development of the property.

(B) Coordinate and ~~document~~ illustrate the design of public and private improvements to be constructed.

(C) Coordinate the subdivision of land, including the granting of easements, development agreements, and provision of surety.

~~Figure 17~~18: Site Plan Flowchart

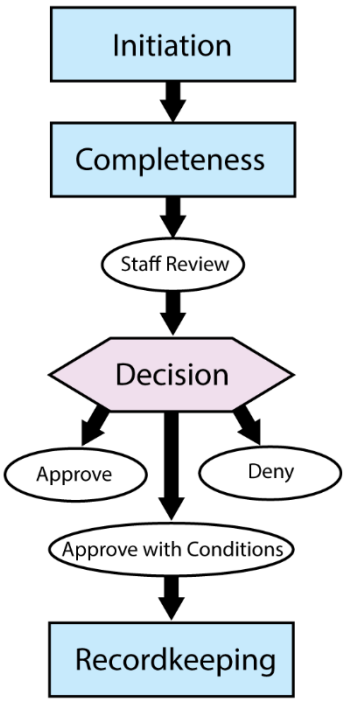

~~(2)~~ Applicability. An approved, valid site plan shall be required prior to the approval of any construction plan and permit for all development specified in Sec. 9.04.052(a)(3). ~~An approved, valid preliminary site plan is required prior to the consideration of a site plan except as provided below:~~

~~(3) Development of a single building not exceeding 5,000 square feet.~~

~~(4) Development of a single building on one lot not exceeding 1 acre (net) and where the lot is not being subdivided from a larger property.~~

~~(5) Development of parking or outside storage areas.~~

~~(6) Development of utilities and non-occupied structures.~~

~~(7)~~(2) ~~Development of outdoor recreation structures and amenities.~~

~~(8)~~(3) Application Procedures and Requirements.

(A) Pre-Application. Before preparing a site plan, the applicant shall meet with the City as required in Sec. 9.04.050(c).

(B) Additional Requirements. In addition to meeting the requirements for site plan approval, the following approvals may be necessary prior to authorization for development as determined during the Pre-Application Meeting(s) (if applicable to the project):

(i) ~~Preliminary or~~F ~~f~~inal plat or replat;

(ii) Engineering plans;

(iii) Stormwater quality plan;

(iv) Traffic Impact Analysis;

(v) Landscape and irrigation plans;

(vi) Façade Plan;

~~(v)~~(vii) Photometric (lighting) plans;

~~(vi)~~(viii) Tree preservation/mitigation plan;

~~(vii)~~(ix) Other approvals as required by ordinance.

(C) Standards of Approval.

(i) Director Approval.

a. ~~Where an application for site plan approval is made for development defined on an approved, valid preliminary site plan, t~~The Director or their designee shall consider all applications for site plan approval and may approve, conditionally approve, or deny the application based upon the criteria listed in subsection (iii) below.

b. The applicant may appeal the Director's decision to the City Council by filing a Notice of Appeal within 10 days following the date the Director notifies the applicant of their action.

(ii) Planning and Zoning Commission Approval.

~~a. The Planning and Zoning Commission shall consider all applications for site plan approval for development not requiring a preliminary site plan, or the proposed site plan constitutes a major amendment to an approved, valid preliminary site plan.~~

~~b.~~a. Where an application for site plan approval requires review per this Article or at the Director's discretion, the ~~The~~ Planning and Zoning Commission may approve, conditionally approve, table, or deny a site plan based upon the criteria listed in subsection (iii) below:

(iii) Approval Criteria.

a. Conformance with the Comprehensive Plan.

b. Compliance with the Zoning Ordinance and other applicable Planning and Development Regulations and previously approved, valid plans for the property.

c. Compliance with a previously approved, valid site-specific stormwater quality plan.

d. The design and location of off-street parking and loading facilities to ensure that all such spaces are usable and are safely and conveniently arranged.

e. The width, grade, and location of streets are designed to accommodate prospective traffic and to provide access for firefighting and emergency equipment to buildings.

f. The use of landscaping and screening:

1. To provide adequate buffers to shield lights, noise, movement, or activities from adjacent properties when necessary.

2. To complement the design and location of buildings and be integrated into the overall site design.

g. The location, size, and configuration of open space areas to ensure that such areas are suitable for intended recreation and conservation uses.

h. Protection and conservation of soils from erosion by wind or water or from excavation or grading.

i. Protection and conservation of water courses and areas subject to flooding.

j. The adequacy of streets, water, drainage, sewerage facilities, garbage disposal, and other utilities necessary for essential services to residents and occupants.

(D) Effect. Approval of a site plan is the City's authorization to apply for approval of building permits and to receive approval of engineering plans. So long as the site plan remains valid, the City shall not apply any additional requirements concerning building placement, streets, drives, parking, landscaping, or screening. Site plan approval is separate and distinct from other permits and approvals as may be required by the City and other regulatory agencies. Approval of a site plan shall not affect other applicable regulations concerning development and land use. Except where authorized by ordinance, a site plan may not be used to approve a variance to development regulations. Where an approved plan conflicts with an adopted regulation and no variance or exception is expressly approved, the regulation shall apply.

(E) Lapse. The approval of a site plan shall be effective for a period of 2 years from the date of approval by the Planning and Zoning Commission, Director, or City Council, at the end of which time the applicant must have submitted and received approval of engineering plans and building permits. If the engineering plans and building permits are not approved, the site plan approval is null and void. If engineering plans and permits have been approved only for a portion of the property and for improvements, the site plan for the remaining property and/or improvements shall be null and void. The applicant shall submit a new site plan for review and approval, subject to current regulations. Site plan approval shall expire upon completion of the improvements shown on the plan. Subsequent additional development, site modifications, and redevelopment shall be permitted in accordance with Sec. 9.04.052(c).

~~(e)~~(d) Amendments.

(1) Generally.

(A) At any time following the approval of a concept plan, preliminary site plan, or site plan and before the lapse of such approval, the property owner(s) may request an amendment.

(B) Amendments shall be classified as major and minor.

(C) Any concept plan, preliminary site plan, or site plan shall be in substantial conformance with the previously approved plan.

(2) Minor Amendments.

(A) Minor amendments shall include corrections of distances and dimensions, adjustments of building configuration and placement, moving nonresidential uses within the same use category to adjacent blocks, realignment of drives and aisles, layout of parking, adjustments to open space, landscaping, and screening, changes to utilities and service locations which do not substantially change the original plan.

(B) The Director may approve or disapprove a minor amendment.

(C) Disapproval may be appealed to the Planning and Zoning Commission.

(3) Major Amendments.

(A) Amendments to previously approved stormwater quality areas, and increases in building height and/or building proximity to an adjacent offsite residential use are considered major amendments.

(B) Major amendments may be considered by the Planning and Zoning Commission at a public meeting in accordance with the same procedures and requirements for the approval of that plan.

~~(f)~~(e) Extension and Reinstatement Procedure.

(1) Sixty (60) days prior to or following the lapse of approval for a concept plan, preliminary site plan, or site plan as provided in these regulations, the property owner may petition the Planning and Zoning Commission to extend or reinstate the approval. Such petition shall be considered at a public meeting of the Planning and Zoning Commission.

(2) In determining whether to grant such request, the Planning and Zoning Commission shall take into account the reasons for lapse, the ability of the property owner to comply with any conditions attached to the original approval, and the extent to which newly adopted regulations shall apply to the plan. The Planning and Zoning Commission shall extend or reinstate the plan, or deny the request, in which instance the property owner must submit a new application for approval.

(3) The Planning and Zoning Commission may extend or reinstate the approval subject to additional conditions based upon newly enacted regulations or such as are necessary to assure compliance with the original conditions of approval. The Planning and Zoning Commission may also specify a shorter time for lapse of the extended or reinstated plan than is applicable to original approvals.

~~(g)~~(f) Revocation of Approval. The Planning and Zoning Commission may revoke approval of a concept plan, preliminary site plan, or site plan if it determines that the conditions of the approval have not been met or if the plan contains, or is based upon, incorrect information which affects a significant health or safety interest.

~~(h)~~(g) Additional Development and Redevelopment.

(1) Following the completion of improvements shown on an approved site plan, additional development, site modifications, or redevelopment of the site shall be permitted subject to the approval of a revised site plan.

(2) Minor expansions and redevelopment may be approved by the Director under the terms of Sec. 9.04.052(d).

(3) All other expansions or redevelopments shall require the submittal of a revised site plan and the approval of the Planning and Zoning Commission under the requirements and procedures then in effect.

Sec. 9.04.053. Relief Procedures

(a) Variances.

(1) Applicability. The Board of Adjustment may authorize, in specific cases due to hardship, a variance from the terms of this Zoning Ordinance. [Reference: Texas Local Government Code § 211.009(a)(3)]

(2) Initiation. An application for a zoning variance shall be filed with the Director.

(3) Completeness. See Sec. 9.04.050(d)(2).

(4) Notice and Hearing(s).

(A) Generally, noticing shall comply with Sec. 9.04.050(e) and Texas Local Government Code § 211.007(c), as applicable.

(B) Additionally, noticing shall follow the requirements below.

(i) Mail notices of a public hearing to the petitioner and to the owners of property lying within 200 feet of any point of the lot or portion thereof on which a variation is desired, and to all other persons deemed by the Board of Adjustment to be affected thereby, such owners and persons being determined according to the current tax rolls of the City.

(ii) Depositing of this written notice in the mail shall be deemed sufficient compliance.

(5) Decision.

(A) The Board of Adjustment shall conduct a public hearing on the variance and shall render its decision after the hearing is closed.

(B) The Board of Adjustment may, in whole or in part:

(i) Approve the variance, or

(ii) Deny the variance, or

(iii) Approve the variance with conditions.

(C) The concurring vote of 4 members of the board is necessary to authorize a variance.

(6) Approval Criteria. The Board of Adjustment shall not approve a variance unless it finds that:

(A) The variance is not contrary to the public interest, and

(B) Due to special conditions, a literal enforcement of the ordinance would result in unnecessary hardship, and

(C) The spirit of the varied provision is observed and substantial justice is done.

(7) Subsequent Applications. If the variance request is denied, the applicant shall not submit a variance request of similarity on the same property for at least twelve (12) months.

(8) Appeals. A party with standing may seek judicial review pursuant to Texas Local Government Code § 211.011.

(9) Scope of Approval. After a final decision on the variance is rendered, the applicant and any party in interest may file any further permits or applications, undertake construction, or establish a use consistent with that decision.

(10) Recordkeeping. The Director shall maintain a copy of any order of the Board of Adjustment pursuant to this Section.

(b) Interpretation.

(1) Applicability. The Director has the authority to make written interpretations concerning the text of this Zoning Ordinance and the zoning map.

(2) Initiation. A request for interpretation shall be submitted to the Director on a form established by the Director and made available to the public.

(3) Completeness. See Sec. 9.04.050(d)(2).

(4) Notice and Hearing(s). Not applicable.

(5) Decision. The Director may, at their discretion, take any of the following actions:

(A) Review and evaluate the request;

(B) Consult with other staff as necessary;

(C) Render an opinion; and

(D) Provide the interpretation to the applicant in writing by regular mail.

(6) Standards. The Director shall consider this Zoning Ordinance, the zoning map, the comprehensive plan, and any other relevant information.

(7) Subsequent Applications. Not applicable.

(8) Appeals. See Sec. 9.04.050(m).

(9) Scope of Approval. An interpretation does not authorize the development or use of a property. After an interpretation is issued, the applicant or any other person may file an application to develop or use the property pursuant to this Zoning Ordinance, and the decision-maker shall take the interpretation into consideration.

(10) Recordkeeping. The Director shall maintain an official record of interpretations that shall be available for public inspection during normal business hours.

Division 6. Nonconformities

Sec. 9.04.054. Purpose

This Division governs uses, buildings, structures, lots, and other situations that came into existence legally prior to the effective date of this Zoning Ordinance or the effective date of future amendments to this Zoning Ordinance, but do not comply with or conform to one or more requirements of this Zoning Ordinance. All such situations are collectively referred to as “nonconformities”.

Sec. 9.04.055. General Policy

While existing legal nonconformities may continue, this Division is designed to curtail substantial investment in nonconformities to bring about their eventual improvement or elimination to preserve the integrity of this Zoning Ordinance and the character of Anna. Any existing legal nonconformity or site condition that becomes nonconforming because of any subsequent rezoning or amendment to this text of this Zoning Ordinance may be continued or maintained only pursuant to this Division. Also, this Division intends to reduce vacancies, promote appropriate redevelopment and re-use of existing structures and lots, and establish requirements.

Sec. 9.04.056. Applicability

(a) This Division applies to any nonconformity. A “nonconformity” means any of the following on the effective date:

(1) Nonconforming use (Sec. 9.04.058),

(2) Nonconforming structure (Sec. 9.04.059),

(3) Nonconforming lot (Sec. 9.04.060), or

(4) Nonconforming site features (Sec. 9.04.061).

(b) For the purpose of this Division, the “effective date” means the effective date of this Zoning Ordinance or any amendment to this Zoning Ordinance that creates a nonconformity.

Sec. 9.04.057. Generally

(a) Continuation of Nonconformities. Except provided below, the lawful use of a building or structure existing at the time of the adoption of this Zoning Ordinance may continue, even if the existing use, building, or structure does not conform to the provisions of this Zoning Ordinance for the district where it is located.

(b) Removal of Building or Structure. If a nonconforming use, building, or structure is removed from a lot, the nonconformity terminates. Any use, building, or structure established or constructed after that time shall comply with the provisions of this Zoning Ordinance in effect at that time.

(c) Replacing Damaged Buildings or Structures.

(1) If a nonconforming building or structure is destroyed by fire, the elements, or other cause, it may not be rebuilt except to conform to the provisions of the Zoning Ordinance.

(2) In the case of partial destruction of a nonconforming building or structure not exceeding 75% of its reasonable value, reconstruction will be permitted by size and function, and cannot be expanded.

(3) A nonconforming building or structure or group of nonconforming buildings or structures that is damaged by fire, flood, explosion, earthquake, war, or riot, may be reconstructed or replaced subject to this Division and erected as before if:

(A) The application for a permit is submitted within 12 months of the disaster,

(B) The restored or reconstructed building or structure does not exceed the square footage of the area as it existed before the disaster, and

(C) The building or structure meets the Anna Building Code.

(d) Public Services. Pursuant to Texas Local Government Code § 211.013(b), this Division does not require the removal or destruction of property that exists as of the effective date that is actually and necessarily used in a public service business. A "public service business" means a public utility or a business of like character.

(e) Annexation. The use of land after the City annexes territory is subject to Texas Local Government Code § 43.002.

(f) Applications. The City will not process applications if there is a nonconformity, unless:

(1) The application brings the property into conformity with this Zoning Ordinance; or

(2) The application is otherwise permitted by this Zoning Ordinance.

Sec. 9.04.058. Nonconforming Use

(a) Applicability. This section applies to any "nonconforming use," defined as a use that lawfully occupies a building or land on the effective date and that:

(1) Is no longer permitted in the applicable zoning district, or

(2) Would require a specific use permit in the applicable zoning district.

(b) Generally. No existing building, structure, or premises devoted to a use not permitted by this Zoning Ordinance shall be enlarged or structurally altered unless required by law or court order, except as provided below.

(c) Discontinuance of Use. A building, structure, lot, or parcel where a nonconforming use is discontinued for at least one year, regardless of the intent of the owner or occupant of the premises, may not be occupied by a nonconforming use after that time.

(d) Change in Nonconforming Uses.

(1) A nonconforming use may change to a conforming use. After a nonconforming use changes to a conforming use, it may not change back to a nonconforming use.

(2) A nonconforming use conducted in a structure may change to another use within the same definition if it is not relocated or expanded.

(3) A nonconforming use not conducted in a structure, or one in which a structure is incidental to the use of the land, shall not change to any other nonconforming use.

~~(4)~~ A nonconforming use of any classification shall not be added where there is already an existing nonconforming use.

(e) Expansion or Enlargement of Nonconforming Uses. A nonconforming use may be extended only within the premises on which the nonconforming use was located on the effective date. "Premises" means the building where the use occurs and the accessory buildings, appurtenances, driveways, parking, and loading spaces.

Sec. 9.04.059. Nonconforming Structures

(a) Applicability. This section applies to any "nonconforming structure." A "nonconforming structure" means a building or structure that:

(1) Lawfully exists on the effective date of this Zoning Ordinance or any amendment to this Zoning Ordinance that would cause the building or structure not to comply with this Zoning Ordinance, and

(2) Does not conform to all of the regulations of the zoning district in which it is located.

(b) Continuance of Nonconforming Structures. Except as provided below, any nonconforming structure may be occupied and operated if maintained in a state of good repair.

(c) Expansion.

(1) A nonconforming structure on a lot may expand one time by as much as 25% of the building's square footage if:

(A) The expansion does not encroach into required setbacks,

(B) Paved parking, sidewalks, and landscaping, as required by this Zoning Ordinance, are provided, and

(C) The nonconforming building or structure is screened and buffered from adjacent uses and zones as determined by Sec. 9.04.045.

(2) The expansion is allowed only if authorized by the Director.

(3) The expansion shall conform to all zoning district and development standards of this Zoning Ordinance and shall not create a new nonconformity.

Sec. 9.04.060. Nonconforming Lots

(a) Applicability. This section applies to any nonconforming lot. A "nonconforming lot" is a lot of record that, on the effective date of this Zoning Ordinance or any ordinance that establishes a minimum or maximum lot area, frontage, or lot width, is:

(1) Not in compliance with the minimum or maximum lot area, frontage, or lot width, and

(2) Lawfully existing and of record, and

(3) Held in separate and different ownership from any lot immediately adjoining and having continuous frontage.

(b) New Construction. In all districts, a nonconforming lot may be used as the building site for any use permitted in that district. No newly created or platted lot shall result in a nonconforming lot.

Sec. 9.04.061. Nonconforming Site Features

(a) Applicability. This section applies to any nonconforming site features.

(1) A "Nonconforming Site Feature" is a situation that occurs when, on the effective date:

(A) An existing site feature on a lot (including but not limited to parking areas, sidewalks, and landscaping) that was in compliance with the standards at the time of its establishment but that no longer conforms to the applicable regulations of this Zoning Ordinance, or

(B) The lot does not include site features required by this Zoning Ordinance for any existing use, building, or structure on the lot.

(b) Generally. On lots with nonconforming site improvements, each section in Division 4 establishes when compliance is required, unless:

(1) The nonconforming site improvements are brought into complete conformity with the regulations applicable to the use, building, structure, or zoning district, or

(2) The activity is authorized by the Planning and Zoning Commission.

(c) Nonconforming Site Approval. When an addition to, or repairs or alterations to, any structure or site improvement is proposed on a lot with a nonconforming site improvement, the Planning and Zoning Commission may approve a site plan (see Division 5) allowing the addition, repairs, or renovation if:

(1) Compliance with the site improvement requirements applicable to the zoning district in which the property is located is not reasonably possible. Mere financial hardship does not constitute grounds for finding that compliance with the site improvement requirements is not reasonably possible; and

(2) The property can be developed as proposed without any significant adverse impact on surrounding properties or the public health or safety; and

(3) If needed, the owner commits to other site design measures to reduce negative impacts associated with the nonconformity or to accomplish the purpose of the required site improvement.

Division 7. Enforcement

Sec. 9.04.062. Generally

(a) This Division establishes procedures the City uses to ensure compliance with the provisions of this Zoning Ordinance and obtain corrections for violations. It also institutes the remedies and penalties that apply to Zoning Ordinance violations.

(b) For any violation not encompassed by this Division, the Director may issue a citation in Municipal Court stating the alleged violation, the date of the violation, and the section of the Zoning Ordinance violated. Each day during which any violation of this Division occurs or continues is a separate offense and upon conviction is punishable as provided in this Division.

Sec. 9.04.063. Violations

Any of the following violates this Zoning Ordinance and is subject to the remedies and penalties provided for in this Division.

(a) Buildings or Structures. To erect, construct, reconstruct, alter, repair, convert, or maintain a building or structure in a manner inconsistent with the requirements of this Zoning Ordinance or a condition of approval.

(b) Use of Land. To use any land or premises in a manner inconsistent with the requirements of this Zoning Ordinance or a condition of approval.

(c) Establish Use or Structure Without Permit or Approval. To establish or place any use or structure upon land that is subject to this Zoning Ordinance without all of the approvals required by this Zoning Ordinance.

(d) Development or Subdivision Without Permit or Approval. To engage in any subdividing, development, construction, remodeling, or other activity of any nature upon land that is subject to this Zoning Ordinance without all of the approvals required by this Zoning Ordinance.

(e) Development, Subdivision, or Use Inconsistent with Permit. To engage in any development, use, construction, remodeling, or other activity of any nature in any way inconsistent with the terms and conditions of any permit, approval, certificate, or other form of authorization required to engage in those activities.

(f) Development, Subdivision, or Use Inconsistent with Conditions of Approval. To violate, by act or omission, any term, condition, or qualification placed by a decision-making body upon any permit or other form of authorization.

(g) Development or Subdivision Inconsistent with this Zoning Ordinance. To erect, construct, reconstruct, remodel, alter, maintain, move, or use any building, structure, or sign, or to engage in development or subdivision of any land in violation of any zoning, subdivision, or other regulation of this Zoning Ordinance.

(h) Making Lots or Setbacks Nonconforming. To reduce or diminish any lot area so that the lot size, setbacks, or open spaces are smaller than prescribed by this Zoning Ordinance.

(i) Increasing Intensity or Density of Use. To increase the intensity or density of use of any land or structure, except in accordance with the procedural requirements and substantive standards of this Zoning Ordinance.

(j) Removing or Defacing Required Notice. To remove, deface, obscure, or otherwise interfere with any notice required by this Zoning Ordinance.

(k) Generally. Any other action, or failure to act, that does not comply with a requirement of this Zoning Ordinance or a lawful condition of approval.

Sec. 9.04.064. Responsible Persons

(a) Any person who violates this Zoning Ordinance is subject to the remedies and penalties expressed in this Division.

(b) If a person causing a zoning violation is a renter, lessor, or contractor, the Director may notify the owner and the renter, lessor, and/or contractor of the violation. The owner shall ensure that the renter, lessor, and/or contractor are aware of the zoning violation and that the owner is ultimately responsible for correcting the violations.

Sec. 9.04.065. Enforcement Responsibility

The Director holds primary responsibility for enforcing all provisions of this Zoning Ordinance. Other City officials, designated by the City Manager, share responsibility for enforcing provisions of this Zoning Ordinance.

Sec. 9.04.066. Enforcement Procedures

(a) Remedies and Enforcement Powers. The City has the following remedies and enforcement powers.

(b) Generally. If Sec. 9.04.063 applies, the City may institute any appropriate action or proceedings:

(1) To prevent any unlawful erection, maintenance, or use,

(2) To restrain, correct, or abate the violation,

(3) To prevent the occupancy of a building, structure, or land, or

(4) To prevent any illegal act, conduct, business, or use in or about the premises.

(c) Notice of Violation.

(1) When any building or use is erected, constructed, built, reconstructed, altered, or maintained in violation of this Zoning Ordinance, the property owner, other responsible party, property owner, lessee, management, or tenant shall be served with a written notice that states the violation and requires compliance with this Zoning Ordinance no more than ten (10) days from service.

(2) The notice may be served in person or by depositing the same as certified in the United States Postal Service addressed to the property owner at the owner's address (i.e., as shown on the most current tax roll of the City), or the tenant (i.e., as shown on the utility billing records of the City). If the City mails the notice to the property owner and the U.S. Postal Office returns it as "refused" or "unclaimed" the validity of the notice is not affected, and the notice is considered delivered.

(d) Withhold Permit.

(1) The City may deny or withhold all permits, certificates, or other forms of authorization on any land or structure or improvements after determining there is an uncorrected violation of a Zoning Ordinance provision or of a condition or qualification of a permit, certificate, approval, or

other authorization previously granted by the City. This enforcement provision applies regardless of whether the current owner or applicant is responsible for the violation in question.

(2) The City may deny or withhold all permits, certificates, or other forms of authorization on any land, structure, or improvements owned or being developed by a person who owns, developed, or otherwise caused an uncorrected violation of a Zoning Ordinance provision or a condition or qualification of a permit, certificate, approval, or other authorization previously granted by the City. This provision applies regardless of whether the property for which the permit or other approval is sought is the property in violation.

(e) Permits Approved with Conditions. Instead of withholding or denying a permit or other authorization, the City may grant authorization subject to a corrected violation condition.

(f) Revoke Permits. Any development permit or other form of authorization required in this Zoning Ordinance may be revoked, including revocation of a certificate of occupancy.

(g) Stop Work. With or without revoking permits, the City may stop work on any building or structure on any land on which there is an uncorrected violation of Zoning Ordinance provision or of a permit or other form of authorization issued, in accordance with its power to stop work under its building codes.

(h) Injunctive Relief. The City may seek an injunction or other equitable relief in court to stop any violation of this Zoning Ordinance or of a permit, certificate, or other form of authorization granted.

(i) Abatement. The City may seek a court order in the nature of mandamus, abatement, injunction, or other action or proceeding to abate or remove a violation or otherwise restore the premises in question to the condition in which they existed prior to the violation.

(j) Civil Action and Administrative Adjudication. The City may enforce the provisions of this Zoning Ordinance through civil action.

(1) Civil action, as per state law; and

(2) Administrative adjudication under Municipal Court Chapter, Article IX, as amended, and Texas Local Government Code Chapter 54, Subchapter C, as amended.

(k) Withhold Public Services

(1) The City may withhold any public services until all rules, regulations, and requirements of the subdivision regulations have been met.

(2) Unless a plan, plat, or replat is approved in the manner and by the authorities provided for in this Zoning Ordinance, it is unlawful within the area covered by the plan, plat, or replat for any officials representing the City to serve or connect that land to any public utility owned, controlled, or distributed by the City for the use of the owners or purchasers of the plat or plan.

(l) Other Remedies. The City may have other remedies provided by law for zoning, subdivision, or related Zoning Ordinance provision violations.

(m) Other Powers. In addition to the enforcement powers specified in this Division, the City may exercise any and all enforcement powers granted by law.

(n) Continuation. Nothing in this Zoning Ordinance prohibits the continuation of previous enforcement actions undertaken by the City by previous and valid ordinances and laws.

Sec. 9.04.067. Cumulative Remedies

The remedies and enforcement powers established in this Division are cumulative, and the City may exercise them in any order or combination at any time.

Sec. 9.04.068. Penalties

Any person or corporation who violates any of the Zoning Ordinance provisions or fails to comply with any of the requirements, or who builds or alters any building or use in violation of any detailed statement or plan submitted and approved, is guilty of a misdemeanor punishable under this section.

(a) The owner or owners or tenant of any building or premises or part, where anything in violation of this Zoning Ordinance exists, and any architect, builder, contractor, agent, person, or corporation employed in connection and who may have assisted in the commission of any Zoning Ordinance violation are guilty of a separate offense punishable under this section.

(b) A person who violates any provision of this Division by performing a prohibited act or by failing to perform an act required is guilty of a misdemeanor. Each day on which a violation exists or continues to exist is a separate offense.

(c) If the definition of an offense under this Division does not prescribe a culpable mental state, then a culpable mental state is not required. This offense is punishable by a $500 maximum fine). Although not required, if a culpable mental state is alleged in the charge of the offense and the offense governs fire safety, zoning, or public health and sanitation, including dumping of refuse, this offense is punishable by a $2,000 maximum fine.

(d) If the definition of an offense under this Division prescribes a culpable mental state and the offense governs fire safety, zoning, or public health and sanitation, including dumping of refuse, then a culpable mental state is required and the offense is punishable by a $2,000 maximum fine.

Division 8. Decision-Making Bodies

Sec. 9.04.069. Generally

This Division introduces and establishes decision-making bodies, describes their composition, and summarizes their authority.

Sec. 9.04.070. Development Services Department

The Development Services Department serves as an administrative and staff decision-making body responsible to the Mayor, City Manager, City Council, Planning and Zoning Commission, and Board of Adjustment. The Development Services Department and the Director have the authority to process proposals to change the text and map of this title and for processing zoning and special permit applications, site planning applications, and Board of Adjustment applications.

Sec. 9.04.071. City Council

The City Council serves as a decision-making body responsible to the Mayor, City Manager, and the City's residents. The City Council is established in Article 4.03 of the City Charter and shall follow those regulations, as applicable.

Sec. 9.04.072. Director

(a) Appointment. See Article 4.05 of the City Charter.

(b) Powers and Duties. The Director has the following duties and responsibilities:

(1) To advise the City Manager on any matter affecting the physical development of the City.

(2) To formulate and recommend to the City Manager a comprehensive plan and modifications.

(3) To review and make recommendations regarding proposed City Council action implementing the comprehensive plan.

(4) To participate in capital program preparations and revisions.

(5) To advise the Planning and Zoning Commission in the exercise of its responsibilities and to provide necessary staff assistance.

(6) To keep the official zoning map current and the copies, by entering any changes that the City Council may order by amendments to the Zoning Ordinance and Map.

(7) To investigate complaints about violations of this Zoning Ordinance.

(8) To provide written notification to the person responsible for zoning violation(s), ordering the necessary action to correct violations, and order:

(A) Discontinuance of illegal uses of land, buildings, or structures.

(B) Removal of illegal buildings or structures or illegal additions or structural additions.

(C) Discontinuance of any illegal work.

(9) To provide any other action authorized by this Zoning Ordinance to ensure compliance with or to prevent violation(s).

Sec. 9.04.073. Planning and Zoning Commission

The Planning and Zoning Commission is established and organized in Article 9 of City's Home Rule Charter.

Sec. 9.04.074. Board of Adjustment

(a) Creation. There is hereby created a Board of Adjustment that shall be organized, appointed, and function as follows:

(1) The Board of Adjustment shall consist of five members who are residents of the City or its extraterritorial jurisdiction, each to be appointed by the City Council for a term of two years and removable for cause by the appointing authority upon written charges and after the public hearing.

(2) Vacancies shall be filled for the unexpired term of any member, whose place becomes vacant for any cause, in the same manner as the original appointment was made.

(3) The terms of three members shall expire each odd-numbered year, and the terms of four of the members shall expire of each even-numbered year.

(4) Board of Adjustment members may be appointed to succeed themselves.

(5) Vacancies shall be filled for unexpired terms, but no member shall be appointed for a term in excess of two years.

(6) Newly appointed Board of Adjustment members shall be installed at the first meeting after their appointment.

(b) Organization.

(1) The Board of Adjustment shall hold an organizational meeting in June of each year.

(2) The Board of Adjustment shall meet regularly and shall designate the time and place of its meetings.

(3) The Board of Adjustment shall adopt its own rules of procedure and keep a record of its proceedings consistent with the provisions of this Zoning Ordinance and the requirements of law.

(c) Powers and Duties Pursuant to Texas Local Government Code § 211.009.

(1) Appeals based on error. The Board of Adjustment shall have the power to hear and decide appeals where it is alleged there is error of law in any order, requirement, decision, or determination made by an administrative official of the City in the enforcement of this Zoning Ordinance.

(2) Limitation on reapplications. When the Board of Adjustment has denied a proposal, no new applications of similar nature shall be accepted by the board or scheduled for 12 months after the date of denial. Applications that have been withdrawn at or before the Board of Adjustment meeting may be resubmitted at any time for hearing before the Board of Adjustment.

(3) Vote of four members required. The concurring vote of four members of the Board of Adjustment is necessary to:

(A) Reverse an order, requirement, decision, or determination of an administrative official;

(B) Decide in favor of an applicant on a matter on which the Board of Adjustment is required to pass; or

(C) Authorize a variation from the terms of a zoning ordinance.

(d) Decision on Appeals. The Board of Adjustment shall decide the appeal within a reasonable time. Upon the hearing, any party may appear in person or by agent or attorney. The Board of Adjustment may reverse or affirm wholly or partly or may modify the order, requirements, decision, or determination as in its opinion ought to be made in the premises, and to that end, shall have all powers of the officer or department from whom the appeal is taken.

(e) Variances. The Board of Adjustment shall have the power to authorize upon appeal in specific cases such variance from the terms of this Zoning Ordinance as will not be contrary to the public interest where, owing to special conditions, a literal enforcement of the provisions of this Zoning Ordinance will result in unnecessary hardship and so that the spirit of this Zoning Ordinance shall be observed and substantial justice done, including the following:

(1) Permit a variance in the yard requirements of any district where there are unusual and practical difficulties or unnecessary hardships in the carrying out of the provisions due to an irregular shape of the lot or topographical or other conditions, provided such variance will not seriously affect any adjoining property or the general welfare.

(2) Authorize, upon appeal, whenever a property owner can show that a strict application of the terms of this article relating to the construction or alterations of buildings or structures will impose unusual and practical difficulties or particular hardship, such variances from the strict application of the terms of this Zoning Ordinance as are in harmony with its own general purpose and intent, but only when the board is satisfied that granting of such variation will not merely serve as a convenience to the applicant, but will alleviate some demonstrable and unusual hardship or difficulty so great as to warrant a variance from the comprehensive plan as established by this article and at the same time, the surrounding property will be properly protected.

(3) The Board of Adjustment shall have the power to hear and decide appeals where it is alleged there is an error of law in any order, requirements, decision, or determination made by the building inspector in the enforcement of this Zoning Ordinance. Except as otherwise provided herein, the board shall have, in addition, the following specific powers:

(A) To permit the erection and use of a building or the use of premises for railroads if such uses are in general conformance with the master plan and present no conflict or nuisance to adjacent properties.

(B) To permit a public utility or public service or structure in any district, or a public utility or public service building of a ground area and of a height at variance with those provided for in the district in which such public utility or public service building is permitted to be located, when found reasonably necessary for the public health, convenience, safety, or general welfare.

(C) To grant a permit for the extension of a use, height, or area regulation into an adjoining district, where the boundary line of the district divides a lot in single ownership on the effective date of this article.

(D) To permit the reconstruction of a nonconforming building that has been damaged by explosion, fire, act of God, or the public enemy, to the extent of more than 90% of its fair market value, where the Board of Adjustment finds some compelling necessity requiring a continuance of the nonconforming use.

(E) To waive or reduce the parking and loading requirements in any of the districts, when:

(i) The character or use of the building is such as to make unnecessary the full provision of parking or loading facilities; or

(ii) Such regulations would impose an unreasonable hardship upon the use of the lot.

(F) The Board of Adjustment shall not waive or reduce such requirements merely for the purpose of granting an advantage or convenience.

(f) Special Exceptions. The Board of Adjustment may hear and decide special exceptions to the terms of this Zoning Ordinance when the regulations require the Board of Adjustment to do so. Special exceptions shall follow the requirements in Sec. 9.04.053.

(g) Changes.

(1) The Board of Adjustment shall have no authority to change any provisions of this Zoning Ordinance and its jurisdiction is limited to hardship and borderline cases which may arise from time to time. The Board of Adjustment may not change the district designation of any land either to a more or less restrictive zone.

(2) It is the intent of this Zoning Ordinance that all questions of interpretation and enforcement shall be first presented to the administrative official, that such questions shall be presented to the Board of Adjustment only on appeal from the decision of the building official and that recourse from the decisions of the Board of Adjustment shall be to the courts as provided by the laws of the State of Texas.

Division 9. Legal Provisions

Sec. 9.04.075. Relationship

(a) Generally. See Texas Local Government Code § 211.013 (Conflict with Other Laws). Except as provided in the above-referenced statute, if any provision of this Zoning Ordinance conflicts with state or federal law, state or federal law controls.

(b) Interpretation.

(1) Specific provisions control over general provisions.

(2) If a conflict exists between different provisions of this Zoning Ordinance, the most restrictive standard applies.

(3) If there are multiple interpretations of this Zoning Ordinance because the meaning of a provision is unclear, the more restrictive interpretation applies.

(4) Any reference to a number in this Zoning Ordinance includes a fraction of that number, unless otherwise provided.

(5) Any reference to a building, structure, tract, block, or lot includes any portion or portions of those features, unless otherwise indicated.

(c) Plat Restrictions.

(1) Nothing in this Zoning Ordinance invalidates any approved plat restriction, nor any provision of adopted building codes.

(2) Building setback lines included in an approved and recorded subdivision plat control over general setback provisions required under the zoning provisions of this Zoning Ordinance.

(d) Building Code Requirements.

(1) No building setback shall be less than that specified for the type of construction proposed by adopted building codes.

(2) The Board of Adjustment has no authority to reduce any building setback required under adopted building codes.

Sec. 9.04.076. Private Restrictions

This Zoning Ordinance does not abrogate any deed restriction, covenant, easement, or any other private agreement or restriction on the use of land. However, if the provisions of this Zoning Ordinance are more restrictive or impose higher standards than any private restriction, the requirements of this Zoning Ordinance control. Where the provisions of any private restriction are more restrictive or impose higher standards than the provisions of this Zoning Ordinance, the private restrictions control if properly enforced by a person having the legal right to enforce those restrictions. The City does not enforce private restrictions.

Sec. 9.04.077. Severability

If any division, section, paragraph, subdivision, clause, phrase, or provision of this Zoning Ordinance is, for any reason, adjudged invalid or held to be unconstitutional, the invalidity or unconstitutionality of that particular division, section, paragraph, subdivision, clause, phrase, or provision so declared does not affect the validity or constitutionality of the remaining provisions of this Zoning Ordinance, but the same, and each of them, remain in full force and effect.

Sec. 9.04.078. Repeal of Existing Ordinances

(a) Any ordinance inconsistent with the terms and provisions of this Zoning Ordinance is repealed. That repeal, however, is only to the extent of any inconsistency. In all other respects, this Zoning Ordinance is cumulative of other ordinances regulating the same subject matter.

(b) Any inconsistency does not reduce the requirements of those regulations pertaining to fire prevention, health, sanitation, or safety of persons or property enacted by the City. If any restriction, prohibition, or provision of this Zoning Ordinance conflict with those provisions or any laws of the State of Texas, or with regulations of State or Federal regulatory bodies having jurisdiction:

(1) If the provision of this Zoning Ordinance is not preempted, the more restrictive restriction, regulation, prohibition, or provision applies, or

(2) If the state or federal law preempts a provision of this Zoning Ordinance, the state or federal law applies.

Sec. 9.04.079. Effective Date

This Zoning Ordinance takes effect upon the adoption of the ordinance from which it is derived by the City Council. The provisions of this Zoning Ordinance supersede all other development regulations governing the development of land within the City. All development applications and proposals filed on or after the effective date of the ordinance from which this Zoning Ordinance is derived, whether for new developments or for add-ons or expansions of existing developments, shall be processed in accordance with the standards and requirements and pursuant to the procedures established in this Zoning Ordinance.

Division 10. Definitions

Sec. 9.04.080. Generally

(a) Usage and Interpretation Rules. For the purpose of this Zoning Ordinance, certain terms or words are interpreted or defined as follows:

(1) Words used in the present tense include the future tense;

(2) The singular includes the plural;

(3) The word “person” includes a corporation, trust, individual, and/or group of individuals;

(4) The term “shall” is always mandatory; and

(5) The term “may” is discretionary.

(6) A reference to an official includes a designee of that official.

(7) When the calculation of a number for a required standard results in a fraction, that fraction is rounded up to the next whole number.

(b) Words and Terms Not Expressly Defined. Words and terms not expressly defined in this Division are to be construed according to the normally accepted meaning of those words or terms. Where no definition appears, then according to their customary usage in the practice of planning and engineering, as determined by the Director.

Sec. 9.04.081. Land Use Terms

The following terms are the land use types that correspond to Table 19: Use Table in Division 3.

(a) Residential Uses

(1) Industrialized Home (Modular Home)

Per the Texas Occupations Code Chapter 1202.002:

(A) Industrialized housing is a residential structure that is:

(i) Designed for the occupancy of one family;

(ii) Constructed in one or more modules or constructed using one or more modular components built at a location other than the permanent site; and

(iii) Designed to be used as a permanent residential structure when the module or the modular component is transported to the permanent site and erected or installed on a permanent foundation system.

(B) Industrialized housing includes the structure’s plumbing, heating, air conditioning, and electrical systems.

(C) Industrialized housing does not include:

(i) A residential structure that exceeds four stories or 60 feet in height;

(ii) Housing constructed of a sectional or panelized system that does not use a modular component; or

(iii) A ready-built home constructed in a manner in which the entire living area is contained in a single unit or section at a temporary location for the purpose of selling and moving the home to another location.

(2) Live-Work Unit

A live-work unit is a Dwelling Unit that is also used for work purposes, provided that the "work" component is restricted to the uses of a professional office, artist's workshop, studio, or other similar uses and is located on the street level. The "live" component may be located on the street level (behind the work component) or any other level of the building. The residential unit is occupied by the business owner or manager.

(3) Manufactured Home

A structure, constructed on or after June 15, 1976, according to the rules of the United States Department of Housing and Urban Development, transportable in one or more sections, which, in the traveling mode, is eight body feet or more in width or 40 body feet or more in length, or, when erected on-site, is 320 or more square feet, and that is built on a permanent chassis and designed to be used as a dwelling with or without a permanent foundation when connected to the required utilities, and includes the plumbing, heating, air conditioning, and electrical systems. All references in this article to manufactured housing or manufactured home(s) shall be references to HUD-code manufactured housing, unless otherwise specified. This use does not include mobile homes.

(4) Mobile Home

A structure constructed before June 15, 1976, transportable in one or more sections that, in the traveling mode, is eight body feet or more in width or 40 body feet or more in length, or, when erected on-site, is 320 or more square feet, and that is built on a permanent chassis and designed to be used as a dwelling with or without a permanent foundation when connected to the required utilities, and includes the plumbing, heating, air conditioning, and electrical systems. Mobile homes shall not be used as dwelling units within the corporate limits of the City. Mobile homes do not include recreational vehicles.

(5) Multifamily Dwelling

A dwelling contained in a structure also containing other dwellings in which each unit is attached to another at one or more party walls and at either the floor or the ceiling. This includes apartments and manor-style apartments. This does not include single-family attached dwellings or duplexes.

(6) Single-Family Dwelling, Attached

A dwelling that is part of a structure containing three or more dwellings, each designed and constructed for occupancy by one family, with each dwelling unit attached by a common wall to another, in which each dwelling is located on a separate platted lot.

(7) Single-Unit or Duplex Unit Park

A parcel of land or lot under one ownership that has been planned and improved for the placement of multiple detached residential dwelling units that house one or two families for lease or rent.

(8) Single-Family Dwelling, Detached

A single-family dwelling (a building designed exclusively for occupancy by one (1) family) that is not attached to any other dwelling or building by any means, excluding mobile homes and manufactured housing situated on a permanent foundation. Each dwelling is located on a separate platted lot.

(9) Townhome Unit

A dwelling that is part of a structure containing three or more dwellings, each designed and constructed for occupancy by one family, with each dwelling unit attached by a common wall to another, in which each dwelling is located on a parcel of land or lot under one ownership.

(10) Two-Family Dwelling (Duplex)

A building designed for occupancy by two individuals or families living independently of each other within separate units with a common wall and under one roof in which each dwelling is located on a separate platted lot. This use is also known as a duplex.

(b) Lodging/Group Living Uses

(1) Bed and Breakfast Facility

An owner-occupied property, other than a hotel or multifamily dwelling that offers lodging for paying guests and serves meals to these guests and contains one or more guest bedrooms and where facilities for food preparation are not provided in the individual guest bedrooms.

(2) Boarding/Rooming House

A building~~, other than a hotel or multifamily dwelling,~~ where lodging or meals is provided to persons for compensation, and where facilities for food preparation are not provided in individual rooms. This use shall not include hotel / motel, bed and breakfast, dormitory, or multifamily dwellings.

(3) Dormitory

A building in which housing is provided for individual students under the general supervision or regulation of an accredited college or university and as distinguished from an apartment, hotel, motel, or rooming house. A dormitory may provide apartment units for guests, faculty, or supervisory personnel on a ratio not to exceed one such apartment unit for each 50 students for which the building is designed. Individual rooms or suites of rooms may have cooking facilities. The dormitory may include facilities such as a commissary and/or snack bar, lounge, and study area, dining halls, and accessory kitchen, recreation facilities, and laundry, provided that these facilities are for the benefit and use of the occupants and their guests and not open to the general public.

(4) Hotel / Motel

A building containing guest rooms in which lodging is provided, with or without meals, for compensation, and that is open to transient or permanent guests, or both. This use may include restaurants, club rooms, banquet halls, ballrooms, and meeting rooms as accessory uses. A hotel/motel only provides temporary lodging, and does not include multifamily or attached dwelling or any other form of permanent residence. Guests are prohibited from using a guest room or suite as a primary permanent residence.

(5) Recreational Vehicle Park

Any tract of land under single ownership, where accommodation is provided for a recreational vehicle use.

(c) Automotive Uses

(1) Auto Dealership

Building(s) and associated open area other than a street or required automobile parking space used for the display or sale of new or preowned automobiles, motorcycles, ATVs, recreational vehicles, light trucks, and trailers, to be displayed and sold on the premises, and where minor repair work and maintenance is

done for those vehicles. This use does not allow for the storage of wrecked automobiles or the dismantling of automobiles or the storage of automobile parts or junk on the premises.

(2) Auto Dealership, Used

Building(s) and associated open area other than a street or required automobile parking space used for the display or sale of used automobiles, motorcycles, ATVs, recreational vehicles, light trucks, and trailers, to be displayed and sold on the premises, and where minor repair work and maintenance is done for those vehicles. This use does not allow for the storage of wrecked automobiles, dismantling automobiles, or storage of automobile parts or junk on the premises.

(3) Auto Parts Sales

The use of any building or other premises to display and sell new or used parts for automobiles, panel trucks, vans, trailers, or recreational vehicles.

(4) Auto Repair, Heavy

An establishment that offers mechanical and bodywork on motor vehicles, including straightening of body parts, body repairs, battery rebuilding, painting, welding, short-term storage of automobiles not in operating condition, similar outdoor work on motor vehicles that may involve noise, glare, fumes, smoke, or similar impacts.

(5) Auto Repair, Light

Minor repair or replacement of parts, tires, tubes, and batteries; diagnostic services; minor motor services such as grease, oil, spark plug, and filter changing; tune-ups; emergency road service; replacement of starters, alternators, hoses, brake parts; automobile washing and polishing; performing state inspections and making minor repairs necessary to pass said inspection; normal servicing of air conditioning systems, and other similar minor services for light load vehicles.

(6) Auto Storage

The storage on a lot or tract of operable automobiles for the purpose of holding such vehicles for sale, distribution, or storage.

(7) Car Wash

A facility where the primary or secondary function is washing automobiles, pick-up trucks, and small vans, but not trailers or commercial trucks. This includes both mechanical production line methods or self-service equipment. A car wash may also function as an accessory use to a gas station or other primary use.

(8) Truck Sales

Building(s) and associated open area other than a street or required automobile parking space used for the display or sale of primarily new heavy load vehicles, to be displayed and sold on the premises, and where no repair work is done except minor reconditioning of the vehicles to be displayed and sold on the premises, and no dismantling of vehicles for sale or keeping of used vehicle parts or junk on the premises. This use also includes the rental of new or used panel trucks, vans, trailers, recreational vehicles, or motor-driven buses in operable condition and where no repair work is done.

(9) Truck Stop and Repair

Any premises where heavy load vehicles are serviced, repaired, and/or where maintenance on such vehicles is undertaken and that includes facilities for dispensing fuels and other petroleum products directly into motor vehicles. Such premises may include the incidental sale of accessories or equipment

for heavy-load vehicles and similar commercial vehicles, overnight lodging accommodations, and/or restaurant facilities.

(d) Commercial Uses

(1) Adult Entertainment Establishment

Amusement enterprises offering activities and services distinguished or characterized by the depiction or describing of “specified anatomical areas” or “specified sexual activities,” as defined in this article. Such uses shall include but not be limited to the following:

(A) Adult Arcade - Any place to which the public is permitted or invited wherein coin-operated, slug-operated, or token-operated, or electronically, electrically, or mechanically controlled still or motion picture machines, projectors, or other image-producing devices are maintained to show images to five or fewer persons per machine at any one time and where the images so displayed are distinguished or characterized by the depicting or describing of “specified anatomical areas” or “specified sexual activities” as defined in this section.

(B) Adult Bookstore - A commercial establishment that has devoted a substantial or significant portion of its business to the sale, rental, or any form of consideration of any one or more of the following:

(i) Books, magazines, periodicals, or other printed matter, photographs, films, motion pictures, videocassettes, videotapes, or other video reproductions, slides, or other visual representations that depict or describe “specified anatomical areas” or “specified sexual activities,” as defined in this section; or

(ii) Instruments, devices, or paraphernalia that depict “specified anatomical areas” or “specified sexual activities” or are designed for use in connection with “specified sexual activities.”

(C) Adult Cabaret - A nightclub, bar, restaurant, or similar commercial establishment that regularly features:

(i) Person or persons who appear in a state of nudity; or

(ii) Live performances that are characterized by the exposure of “specified anatomical areas” or by “specified sexual activities,” including topless or bottomless dancers, exotic dancers, or strippers; or

(iii) Films, motion pictures, videocassettes, videotapes, or other video reproductions, slides, or other photographic or visual representations that are characterized by the depiction of “specified anatomical areas” or “specified sexual activities” as defined in this section.

(D) Adult Motion Picture Theater - A commercial establishment where, for any form of consideration, films, motion pictures, videocassettes or tapes, slides, or similar photographic reproductions are regularly shown that are characterized by the depiction or description of “specified anatomical areas” or “specified sexual activities” as defined in this section.

(E) Adult Theater - A theater, concert hall, auditorium, or similar commercial establishment that regularly features persons who appear in a state of nudity or live performances that are characterized by the depiction or description of “specified anatomical areas” or “specified sexual activities” as defined in this section.

(F) Sexually Oriented Business – An adult entertainment establishment

(G) Nude Modeling Studio - Any place where a person who appears in a state of nudity, or displays any “specified anatomical area” is provided to be observed, sketched, drawn, painted, sculptured, photographed, or similarly depicted by other persons who pay money or any form of consideration.

(H) Massage Parlor - Any place where, for any form of consideration, massage, alcohol rubs, administration of fomentations, electric or magnetic treatments, or any other treatment or manipulation of the human body occurs as part of or in connection with any “specified sexual activity,” or where any person providing such treatment, manipulation, or service related thereto exposes any “specified anatomical area.”

(2) Artist Studio

The workshop of an artist, writer, craftsperson, or photographer, but not a place where members of the public come to receive instruction on a more than incidental basis or to sit for photographic portraits.

(3) Bar (75% sales from alcohol)

An establishment that serves alcoholic beverages by the drink for on-site consumption and that derive seventy-five (75) percent or more of the gross revenue from the on-premise sale of alcoholic beverages.

(4) Brewpub/Wine Bar

A restaurant or other facility that manufactures alcoholic beverages including but not limited to beer, wine, or liquor for either on-premises or off-premises retail and wholesale and consumption in quantities not considered industrial or large-scale production as determined by the City Manager or designee. The business must hold one of the following licenses or permits from the Texas Alcoholic Beverage Commission: Winery Permit (G) or Brewpub License (BP).

(5) Building, Materials, and Landscaping Store

The sale of new building and landscaping materials and supplies with related sales for hardware, carpet, plants, electrical and plumbing supplies all of which are either oriented to a retail customer or contractor or wholesale customer. Outdoor storage and retail sales are incidental.

(6) Cannabidiol (CBD) Shop and smoking-related shops and uses include the following:

(i) Cannabidiol (CBD) shop. An establishment for which more than fifty percent (50%) of sales are derived from the retail sale of products related to or derived from CBD (cannabidiol) oil or hemp. This includes, but is not limited to, oils, vitamins, supplements, food, personal care, and garments.

(ii) Cigar lounge. An establishment that may sell food or beverages for on-site consumption, allows smoking by customers, and is cigar-themed and focused, as evidenced by the following: (1) clearly states in its name and marketing that it is a "cigar bar" or "cigar lounge," (2) derives at least thirty-three (33) percent of its gross revenue from the on-site sale of cigars and cigar products, (3) maintains an on-site walk-in humidor for the intent of resale of cigar products; (4) posts outdoor signage notifying the public that entry will result in exposure to secondhand tobacco smoke, and (5) provides an independent ventilation system and must be separated from any adjoining nonsmoking areas by an impermeable wall and ceiling. For the purposes of this subsection and subsection (iii), below, “cigar(s)” means a roll of tobacco which is wrapped in leaf tobacco, or wrapped in a substance that contains tobacco, and which does not include any separate filter as part of its design. For the purposes of this subsection and subsection (iii), below, “cigar product(s)” means products directly

associated with cigars, and excludes all types of cigarettes (tobacco or otherwise), cigarillos, electronic smoking devices, vapes or vaping liquids, pipes, hookahs (or other shared pipes), or any smoking products which do not contain tobacco (e.g., those containing cloves, hemp, or other tobacco analog/substitute). The term "cigar products" also includes cigar-related accessory items such as cigar cutters and humidor boxes commonly associated with the smoking of cigars, but excludes any item designed or marketed for the purpose of repackaging the contents of any smoking product, including a tobacco cigar, into another form or device for ignition, aerosolization, other means of use (e.g., glass pipes which could be used to smoke tobacco removed from a cigar). Items such as apparel, memorabilia or artwork do not constitute cigar products.

(iii) Cigar shop. An establishment for which more than ninety percent (90%) of sales are derived from the retail sale of cigar products in which cigars are sold, stored, and/or consumed, except that the term “cigar shop” does not include a cigar lounge.

(iv) Smoke Shop. An establishment that sells tobacco, cigarettes, electronic cigarettes, vaping products, hookah products, nicotine-enriched products, and/or associated paraphernalia, products and devices primarily for the purpose of smoking or vaping in various forms. These establishments sometimes provide an on-site contained area with a separate ventilation system for the purpose of smoking within the associated structure. Smoke shops do not include: (1) establishments engaged in the sale of tobacco products and/or smoking equipment as an incidental part of a variety of retail sales such as gas stations, convenience stores, or drug stores; (2) cigar shops; or (3) cigar lounges.

(7) Commercial Amusement, Indoor

A place where entertainment activities occur completely within an enclosed structure for a fee, including but not limited to bowling alleys, arcades, skating rinks, escape rooms, pool halls, video, and pinball parlors.

(8) Commercial Amusement, Outdoor

A place where entertainment activities occur outdoors for a fee, including but not limited to miniature golf, batting cages, water slides, driving ranges, and go-cart tracks.

(9) Convenience Store

A retail store that sells everyday goods and services that may include, without limitation, ready-to-eat food products, groceries, over-the-counter drugs, and sundries.

(10) Convenience Store, Fuel Pumps

A retail store that sells everyday goods and services that may include, without limitation, ready-to-eat food products, groceries, over-the-counter drugs, and sundries. This use includes the sales of fuel for automobile refueling.

(11) Feed and Farm Supply

An establishment for the selling of foodstuffs for animals and including implements and goods related to agricultural processes but not including farm machinery.

(12) Financial Institution

An establishment where the primary occupation is financial services such as banking, savings and loans, loan offices, and check cashing and currency exchange outlets. It does not include financial services that

typically occur in an office or storefront, such as investment companies, loan companies, credit and mortgage, insurance services, or brokerage firms), which are classified under "Office," below. Alternative financial services like cash advances are listed under "Pawn Shop / Pay Day Loans" below.

(13) Food Preparation and Sales

A place for preparing, cooking, baking, and selling of products on the premises.

(14) Food Truck Park

An area designated for mobile vendors (e.g., food trucks) to park and sell food, beverages, and other retail items or services to patrons. This use may include any necessary electrical outlets, seating/dining areas, restroom facilities, and trash receptables needed for the food trucks' daily operations.

(15) Greenhouse or Nursery

A facility, structure, or area, often artificially heated and/or cooled, used as a location for cultivating plants that are used by the grower and not sold as a commercial activity. This use also includes where trees or plants are raised and/or sold, including related storage of equipment for landscape contracting and like instances.

(16) Grocery Store

A store primarily engaged in retailing a general line of food products, such as canned and frozen foods; fresh fruits and vegetables; and fresh and prepared meats, fish, and poultry.

(17) Heavy Equipment Sales and Rental

The sales and maintenance of heavy machinery. This includes establishments primarily engaged in sales, renting, or servicing machinery and equipment for use in business, agricultural, or industrial operations. These establishments typically cater to a business clientele and do not generally operate a retail-like or store-front facility. "Heavy machinery" includes office equipment, machinery tools, construction equipment, farm implements, excavation equipment, or transportation equipment.

(18) Kennel

A facility licensed to house dogs, cats, or other household pets and/or where grooming, breeding, boarding, ~~or~~ training, or selling of animals is conducted as business.

(19) Mixed-Use ~~Development~~Building

~~The development of a tract of land or~~A building ~~or structure~~ with two or more different uses such as but not limited to residential, office, retail, public, or entertainment, in a compact urban form. ~~A mixed-use development may include a mixed-use building. A mixed-use building is a building with a~~Any of the following floor space configurations:

(A) Any general retail, office, or restaurant use on the ground floor, and residential dwelling units above the ground floor or behind the non-residential floor area.

(B) The floor space above the ground floor may be occupied by nonresidential floor area in addition to dwelling units.

(20) Office

An office for professionals, such as lawyers, architects, financiers, engineers, artists, musicians, designers, teachers, accountants, and others who, through training, are qualified to perform services of a professional nature and where no storage or sale of merchandise exists, except as accessory to the professional services.

(21) Pawn Shop / Pay Day Loans

An establishment where money is loaned on the security of personal property pledged in the keeping of the owner (pawnbroker). This includes short-term cash loan businesses (also known as payday loans), most commonly based on a borrower's personal check held for future deposit or on electronic access to the borrower's bank account.

(22) Personal Services

Shops and establishments primarily engaged in providing services generally involving the care of the person or such person's apparel, or rendering services to business establishments such as laundry or dry-cleaning retail outlets, portrait/photographic studios, beauty salons, massage spas, barber shops, employment service, or mailing or copy shops. Intradermal services ("Permanent Makeup") such as microblading, lip blushing, medical camouflage, and scalp micropigmentation as well as ear-piercing services are permitted by right as an accessory use but shall not be the primary service nor include body tattooing ("Tattoos") or additional body piercings unless granted by a specific use permit.

(23) Portable Building Sales

An establishment that displays and sells structures that are capable of being carried and transported to another location, not including mobile homes or manufactured housing.

(24) Postal Services

A local branch of the United States Postal Service or private commercial venture engaged in the distribution of mail and incidental services. This includes those establishments that reproduce printed or photographic impressions, including but not limited to the process of composition, binding, plate making, microform, type casting, presswork, and printmaking.

(25) Private Club

An establishment providing social and dining facilities, as well as alcoholic beverage service, to an association of persons, and otherwise falling within the definition of, and permitted under the provisions of the Texas Alcoholic Beverage Code, as the same may be hereafter amended, and as it pertains to the operation of private clubs.

(26) Restaurant

An establishment where food and drink are prepared, sold to customers, and may be consumed on the premises.

(27) Retail Store

A shop or store that, as its primary business, sells merchandise to the public. Examples include drugstores and discount department stores, and stores that sell apparel, home improvement/furnishings, toys, electronics, or sporting goods.

(28) Radio/Television Studio

A land use that broadcasts amplitude modulation or frequency modulation audio signals for general public reception.

(29) Shopping Center

A group of primarily retail and service commercial establishments planned, constructed, and managed as a total entity with customer and employee parking provided on-site, provision for goods delivery separated from customer access, provision of aesthetically appropriate design and protection from the elements.

(30) Tasting Room

A retail establishment associated with a brewery, brewpub, distillery, or winery for the sale of beer, wine, or liquors.

(31) Taxidermist

A facility engaged in the preserving of an animal's body via mounting or stuffing for the purpose of display or study.

(32) Theater

A structure that is open to the public and is used for dramatic, operatic, musical, motion picture, or other performance or entertainment-related activities, where admission is charged per performance or event, and where there is no audience participation other than as spectators. Such establishments may include incidental services such as food and beverage sales and other concessions.

(33) Veterinarian Facility

Any facility maintained by or for the use of a licensed veterinarian to diagnose, treat, or prevent animal diseases and injuries. This use includes any necessary overnight care, medical treatment, and monitoring services for any boarded animal.

(e) Recreation Uses

(1) Amphitheater

An open area with its appurtenant facilities devoted primarily to the showing of motion picture or theatrical productions on a paid admission basis to patrons.

(2) Athletic Field, Public

An athletic field or stadium owned and operated by a public agency for the general public including a baseball field, golf course, football field, or stadium that may be lit for nighttime play. This use does not include professional sporting stadiums.

(3) Athletic Field, Private

An athletic field or stadium owned and operated by a private agency or corporation for paying patrons including a baseball field, golf course, arena, football field, or stadium that may be lit for nighttime play. This use includes those uses associated with professional sporting stadiums, arenas, and venues.

(4) Community Center, Public

A building or buildings dedicated to social and/or recreational activities, serving the City or a neighborhood and owned and operated by the City or by a nonprofit organization dedicated to promoting the health, safety, morals, or general welfare of the City.

(5) Community Center, Private

A building or buildings dedicated to social and/or recreational activities serving residents of a subdivision, homeowner's association, or development that is operated by an association or incorporated group for their use and benefit; not to be a commercial, for-profit business.

(6) Country Club

Land and buildings customarily containing a golf course and a clubhouse and available only to specific private membership; such a club may contain adjunct facilities such as a private club, dining room, swimming pool, tennis courts, and similar recreational or service facilities.

(7) Golf Course

An area with improved with trees, greens, fairways, hazards for the sport of golf, and that may include clubhouses.

(8) Health Club / Athletic Facility

An establishment that provides exercise facilities such as running, jogging, aerobics, weightlifting, indoor/outdoor sports courts, and swimming, as well as locker rooms, showers, and saunas. Uses would typically include racquetball and handball courts, tennis courts, weightlifting and exercise equipment facilities, exercise areas, swimming pools and spas, martial arts, classrooms and/or practice areas, gymnasiums and running or jogging tracks. This shall not include municipal or privately owned, access-only recreation buildings.

(9) Racetrack

A facility used for the racing of motor-driven vehicles and/or animals.

(10) Sport Shooting Range

A business establishment, private club, or association that operates an area for the discharge or other use of firearms for silhouette, skeet, trap, black powder, target, self-defense, or similar recreational shooting.

(11) Park

An open recreation facility or park owned and operated by a public agency and available to the general public. A park may be privately owned.

(12) Swimming Pool

A swimming pool with accessory facilities, not part of the municipal or public recreational system and not a private swim club, but where the facilities are available to the general public for a fee.

(f) Public/Institutional Uses

(1) Cemetery

Land used or intended to be used for the burial of the dead and dedicated for cemetery purposes, including mausoleums and mortuaries when operated in conjunction with and within the boundaries of such cemetery.

(2) Civic Center

A building or complex of buildings that houses municipal offices and services and that may include cultural, recreational, athletic, convention, event, and/or entertainment facilities ~~owned and/or operated by a governmental agency~~.

(3) Civic Club or Lodge

A facility or area for a special purpose organization or for the sharing of sports, arts, literature, politics, or other similar interests, but not primarily for profit or to render a service that is customarily carried on as a business, excluding religious land uses.

(4) College or University

An institution established for educational purposes offering courses of study beyond the secondary education level, but excluding trade and commercial schools.

(5) Correctional Facility

A facility that is generally designed for the confinement, correction, and rehabilitation of adult and/or juvenile offenders sentenced by a court.

(6) Fairgrounds

An area or space either outside or within a building for the display of topic-specific goods or information. This use includes outdoor fairs, exhibitions, rodeos, and circuses.

(7) Public Library, Museum, or Art Gallery

An institution for the collection, display, and distribution of objects of art, science, or library sciences and that are sponsored by a public or quasi-public agency that is open to the general public.

(8) Religious Land Use

A structure or group of structures intended for regular gatherings of people to attend, participate in or conduct religious services and other related activities and associated accessory uses. Associated accessory uses may include religious instruction classrooms, church offices, counseling programs, private school, youth programs, parking, child and adult day care facilities, summer camps, recreational facilities, caretaker's quarters, food bank, thrift shop, sales of religious items, and cemeteries.

(9) School

A public or private educational facility offering instruction at the elementary, junior, and/or senior high school levels in the branches of learning and study required to be taught in the schools of Texas.

(10) Technical School

A nonacademic establishment such as a trade school, where instruction is offered in secretarial, computer and data processing, drafting, electronic repair including radio/TV repair, commercial art, allied health care, real estate, banking, restaurant operation, or similar trades, or vocational training such as

automobile body and engine repair, construction equipment operation, building trades, truck driving, and mechanical and electrical equipment/appliance repair.

(g) Industrial Uses

(1) Brewery/Distillery

The production of beer, wine and/or liquor at industrial quantities and internal large-scale commercial distribution.

(2) Commercial Cleaning Facility

An industrial facility where fabrics are cleaned with substantially nonaqueous organic solvents.

(3) Commercial Kitchen

A place for preparing, cooking, or baking of products primarily intended for off-premises distribution.

(4) Contractor's Shop and Storage Yard

The offices and/or storage facilities for a specialized trade related to construction, electric, glass, painting and decorating, welding, water well drilling, sign making, or similar items. This use includes storage yards (for equipment, materials [including sand, road-building aggregate or lumber], supplies and/or vehicles owned or rented by the establishment), roofing and sheet metal, fabrication of cabinetry and related millwork and carpentry, elevator maintenance and service, and Venetian blind and metal awning fabrication and cleaning. Incidental sales of materials are included within this definition.

~~(5) Drone Delivery Hub.~~

~~An area of land, structural surface, building, or structure with one or more designated drone staging areas for use by unmanned aircraft systems (UAS) approved by the Federal Aviation Administration to distribute commercial goods by air. This includes any appurtenant areas used or intended for use for unmanned aircraft system buildings, structures, and other facilities. This use is for permanent infrastructure and overnight storage of UAS.~~

~~(6) Drone Delivery Pick-Up Kiosk.~~

~~An area of land, structural surface, building, or structure with one or more designated drone staging areas for use by unmanned aircraft systems (UAS) approved by the Federal Aviation Administration to distribute commercial goods by air. This includes any appurtenant areas used or intended for use for unmanned aircraft system buildings, structures, and other facilities. This use is for temporary stops and no overnight storage of UAS.~~

~~(7)~~(5) Industrial and Manufacturing, Heavy

The manufacturing, processing, and storing of paper, chemicals, plastics, rubber, cosmetics, drugs, nonmetallic mineral products (such as concrete and concrete products, glass), primary metals, acetylene, cement, lime, gypsum or plaster-of-Paris, chlorine, corrosive acid or fertilizer, insecticides, disinfectants, poisons, explosives, paint, lacquer, varnish, petroleum products, coal products, plastic and synthetic resins, electrical equipment, appliances, batteries, and machinery. This group also includes asphalt mixing plants, concrete mixing plants, smelting, animal slaughtering, oil refining, and explosives facilities.

~~(8)~~(6) Industrial and Manufacturing, Light

Manufacturing of products, from extracted, raw, recycled, or secondary materials, including bulk storage and handling of those products and materials, or crushing, treating, washing, and/or processing of materials. This includes similar establishments, and businesses of a similar and no more objectionable character. It also includes incidental finishing and storage. Goods or products manufactured or processed

on-site may be sold at retail or wholesale on or off the premises. This does not include any activity listed under Industrial and Manufacturing, Heavy. Examples of general manufacturing include the manufacture or production of the following goods or products: apparel (including clothing, shoes, dressmaking); boats and transportation equipment; brooms; caskets; communication or computation equipment; dairy products; die-cut paperboard and cardboard; drugs, medicines, pharmaceutical; electrical equipment or machinery; farm machinery; fasteners and buttons; feed and grain; food/baking (including coffee roasting, creameries, ice cream, ice, frozen food, confectionery, and beverage); fruit and vegetable processing, canning and storage; gaskets; glass products made of purchased glass; household appliances; industrial controls; leather and allied products; lithographic and printing processes (including printing plants as defined below); mattresses; medical equipment and supplies; medicines; mill work and similar woodwork; mobile homes; musical instruments; novelties; office supplies; optical goods; photographic equipment; prefabricated and modular housing and components; printing and print supplies (including printing plants); 3-D printing, radio and TV receiving sets; sanitary paper products; scientific and precision instruments; service industry machines; signs; textiles (including dyeing, laundry bags, canvas products, dry goods, hosiery, millinery); tobacco products; toys, sporting and athletic goods; and watches and clocks. “A "printing plant" means a facility devoted to printing or bookbinding, including related large-scale storage and transshipment.

~~(9)~~(7) Industrial Park

A large tract of land that has been planned, developed, and operated as an integrated facility for a number of individual industrial uses, with special attention to circulation, parking, utility needs, aesthetics, and compatibility.

~~(10)~~(8) Research and Development

A facility (such as a laboratory) for general research, scientific research, development and/or training where assembly, integration, and testing of products in a completely enclosed building is incidental to the principal use of scientific research, development, and training.

~~(11)~~(9) Salvage Yard

Any building, structure, or open area used for the dismantling or wrecking of any type of used vehicles or the storage, sale, or dumping of dismounted or wrecked vehicles or their parts and accessories, including any farm vehicles or farm machinery or parts thereof, stored in the open and not being restored to operating condition, including the commercial salvaging, storage, and scraping of any other goods, articles, or merchandise. This use also includes areas in which waste or scrap materials are bought, sold, exchanged, stored, packed, disassembled, or handled, including but not limited to scrap iron and other metals, paper, rags, rubber tires, and bottles.

~~(12)~~(10) Self-Storage (Mini-Warehouse)

A facility used for storage of goods and/or materials with separate access to individual storage units by persons renting the individual units.

~~(13)~~(11) Warehouse, Distribution, and Wholesale

A facility or area for the storage of goods, and the sale of goods to other firms for resale, including activities involving significant storage and movement of products or equipment. This use does not involve manufacturing or production. Examples include:

(A) Carting,

(B) Cold storage,

(C) Distribution facilities (as defined below),

(i) A “distribution facility” means the intake of goods and merchandise, individually or in bulk, the short-term holding or storage of such goods or merchandise, and/or the breaking up into lots or parcels and subsequent shipment off-site of such goods and merchandise. Distribution may be provided to an entity with an identity of interest in the distribution facility or to businesses and individuals unrelated to the distributor. The term "distribution facility" also includes a transshipment facility for the temporary holding, storage, and shipment of goods or vehicles.

(D) Dry goods wholesale,

(E) Express crating,

(F) Hauling,

(G) Feed locker plants,

(H) Fulfillment centers that combine storage with call centers,

(I) Hardware storage,

(J) Merchant wholesalers (such as restaurant supply sales),

(K) Warehouse or produce/fruit/food storage and wholesale structures,

(L) Wholesale sale of paper supplies, shoes, sporting goods, professional and commercial equipment and supplies, and otherwise preparing goods for transportation.

~~(14)~~(12) Wholesale Showroom Facility

An establishment that primarily consists of sales offices and sample display areas for products and/or services delivered or performed off-premises. Catalog and telephone sales facilities are appropriate. Retail sales of products associated with the primary products and/or services are permitted. Warehousing facilities shall maintain a minimum of 75% of its total floor area devoted to storage and warehousing not accessible to the public.

(h) Caretaking Uses

(1) Adult Day Services

A facility that offers services and activities to senior citizens, including but not limited to counseling, assistance with daily tasks, exercise, transportation, and social activities. Such facilities do not include overnight stays.

(2) Assisted Living Facility

Per the Texas Health & Safety Code, Section 247.002, “assisted living facility” means an establishment that:

(A) Furnishes, in one or more facilities, food and shelter to four or more persons who are unrelated to the proprietor of the establishment;

(B) Provides:

(i) Personal care services; or

(ii) Administration of medication by a person licensed or otherwise authorized in this state to administer the medication;

(C) May provide assistance with or supervision of the administration of medication; and

(D) May provide skilled nursing services for the following limited purposes:

(i) Coordination of resident care with outside home and community support services agencies and other health care professionals;

(ii) Provision or delegation of personal care services and medication administration as described by this subdivision;

(iii) Assessment of residents to determine the care required; and

~~(iv)~~ For periods of time as established by department rule, delivery of temporary skilled nursing treatment for a minor illness, injury, or emergency.

(iv)

(3) Chemical Dependency Facility

Per the Texas Health & Safety Code, Section 464.001:

(A) “Chemical dependency" means:

(i) Abuse of alcohol or a controlled substance;

(ii) Psychological or physical dependence on alcohol or a controlled substance; or

(iii) Addiction to alcohol or a controlled substance.

(B) “Facility” means:

(i) A public or private hospital;

(ii) A detoxification facility;

(iii) A primary care facility;

(iv) An intensive care facility;

(v) A long-term care facility;

(vi) An outpatient care facility;

(vii) A community mental health center;

(viii) A health maintenance organization;

(ix) A recovery center;

(x) A halfway house;

(xi) An ambulatory care facility; or

(xii) Any other facility that offers or purports to offer treatment.

(4) Child Care Facility, Children’s Home

A business for the care of children at a location other than a caretaker’s residence for more than 24 hours a day. See Chapter 42 of the Human Resources Code.

(5) Child Care Facility, Daycare

An establishment providing care for seven (7) or more children for less than twenty-four (24) hours a day at a location other than the permit holder’s home. A State license is required. Also includes similar terms such as nursery and child care center. See Chapter 42 of the Human Resources Code.

(6) Child Care Home (≤6 Children)

A private residence where state-licensed care, protection, and supervision are provided, for a fee, at least twice a week to no more than six (6) children at one time, including children of the adult provider, for less than twenty-four (24) hours per day. See Chapter 42 of the Human Resources Code.

(7) Child Care Home (≥7 Children)

A private residence where state-licensed care, protection, and supervision are provided, for a fee, at least twice a week to no more than twelve (12) children at one time, including children of the adult provider, for less than twenty-four (24) hours per day. See Chapter 42 of the Human Resources Code.

(8) Community Home for Persons with Disabilities

A residence for not more than six (6) persons with disabilities and two (2) supervisors. Such entity must be licensed and comply with Chapter 123 of the Human Resources Code. Per Section 123.002, a " person with a disability"" means a person whose ability to care for himself or herself, perform manual tasks, learn, work, walk, see, hear, speak, or breathe is substantially limited because the person has:

(A) An orthopedic, visual, speech, or hearing impairment;

(B) Alzheimer's disease;

(C) Pre-senile dementia;

(D) Cerebral palsy;

(E) Epilepsy;

(F) Muscular dystrophy;

(G) Multiple sclerosis;

(H) Cancer;

(I) Heart disease;

(J) Diabetes;

(K) Autism; or

(L) Mental illness.

Per Section 123.003, "The use and operation of a community home that meets the qualifications imposed under this chapter is a use by right that is authorized in any district zoned as residential."

(9) Funeral Services

An establishment used primarily for human funeral services, which may or may not include facilities on the premises for embalming and performing of autopsies or other surgical procedures. Examples include funeral homes, mortuaries, crematoriums, or columbaria.

(10) Halfway House

A licensed home for inmates on release from more restrictive custodial confinement or initially placed in lieu of such more restrictive custodial confinement, wherein supervision, rehabilitation, and counseling are provided to mainstream residents back into society, enabling them to live independently.

(11) Medical Care Facility

A facility, whether or not licensed or required to be licensed by the State of Texas, by or in which facilities are maintained, furnished, conducted, operated, or offered to prevent, diagnose, or treat human disease, pain, injury, deformity, or physical condition, whether medical or surgical, of two or more non-related mentally or physically sick or injured persons; or for the care of two or more non-related persons requiring or receiving medical, surgical, or nursing attention or service as acute, chronic, convalescent, aged, or physically disabled. This use includes an intermediate care facility, mental facility, outpatient surgery center, birthing facility, diagnostic imaging facility, radiation therapy facility, dialysis facility, medical/physical rehabilitation and trauma unit, or related institution or facility that offers treatment on an outpatient basis. This use may be operated for profit or nonprofit, privately owned, or operated by a local government unit. This use includes any hospital, defined as any licensed and State of Texas accredited health care institution with an organized medical and professional staff and with inpatient beds available around-the-clock, whose primary function is to provide inpatient medical, nursing, and

other health-related services to patients for both surgical and nonsurgical conditions and that usually provides some outpatient services (such as emergency care).

(12) Medical Office

A public or private, profit or nonprofit facility, office, suite for the reception and treatment of outpatient persons physically or mentally ill, injured, handicapped, or otherwise in need of physical or mental diagnosis, treatment, care, or similar service where licensed medical, dental, and other health care professionals conduct outpatient services. No overnight patients shall be kept on the premises. This use typically includes physician and dental offices.

(i) Transportation Uses

(1) Airport

A place where an aircraft can land and take off, usually equipped with hangars, facilities for refueling and repair, and various accommodations for passengers and/or freight.

(2) Bus Terminal

Any premises for the transient housing or parking of motor-driven buses and the loading and unloading of passengers.

(3) Parking Facility

An area for parking light or heavy load vehicles.

(4) Railroad Station

Any premises for the transient parking of trains and the loading and unloading of passengers.

(5) Railroad Team Track and Right-of-Way

A facility/place for the loading and unloading of materials on trains.

(6) Transit Station

An area or Facility where people wait for transportation services.

(7) Truck or Motor Freight Terminal

A building or area in which freight brought by motor truck is assembled and/or stored for shipping by motor truck.

(j) Infrastructure Uses

(1) Drone Delivery Hub.

An area of land, structural surface, building, or structure with one or more designated drone staging areas for use by unmanned aircraft systems (UAS) approved by the Federal Aviation Administration to distribute commercial goods by air. This includes any appurtenant areas used or intended for use for unmanned aircraft system buildings, structures, and other facilities. This use is for permanent infrastructure and overnight storage of UAS.

(2) Drone Delivery Pick-Up Kiosk.

An area of land, structural surface, building, or structure with one or more designated drone staging areas for use by unmanned aircraft systems (UAS) approved by the Federal Aviation Administration to distribute commercial goods by air. This includes any appurtenant areas used or intended for use for unmanned

aircraft system buildings, structures, and other facilities. This use is for temporary stops and no overnight storage of UAS.

~~(1)~~(3) Electrical Substation

A subsidiary station in which electric current is transformed.

~~(2)~~(4) Gas Metering Station

A facility at which natural gas flows are regulated and recorded.

(5)

~~(3)~~ Gas Metering Station with Odorizer

A facility at which natural gas flows are regulated and recorded that may use a device to odorize gas at the facility.

~~(4)~~(6) Governmental Service Yard

An area for the servicing and storing vehicles or other property of a governmental agency.

~~(5)~~(7) Power Plant

An industrial facility using solar, wind, water, electric, or other sources to generate electric power.

~~(6)~~(8) Radio, TV, or Microwave Operations, Amateur

The transmission and retransmission of radio, electromagnetic, or microwave signals for private or personal use and not for the purpose of operating a business and/or for financial gain.

~~(7)~~(9) Radio, TV, or Microwave Operations, Commercial

The transmission and retransmission of radio, electromagnetic, or microwave signals primarily for the purpose of operating a business and/or financial gain.

~~(8)~~(10) Recycling Facility

A facility used for the collection and/or processing of recyclable material. Processing means the preparation of material for efficient shipment by such means as baling, compacting, flattening, grinding, crushing, mechanical sorting, or cleaning. Such a facility, if entirely enclosed within a building or buildings, shall be considered a warehouse.

~~(9)~~(11) Solid Waste Facility / Landfill

A facility where non-hazardous wastes are taken from collection vehicles, temporarily stored, and ultimately relocated to a permanent disposal site. This includes any facility, incinerator, landfill, materials recovery facility, municipal solid waste landfill, private or public solid waste management facility, recovered materials processing facility, sanitary landfill, or solid waste management facility.

~~(10)~~(12) Solid Waste Transfer Station

A facility and/or premises at which solid waste is temporarily deposited prior to ultimate removal to a permanent solid waste storage site.

~~(11)~~(13) Telephone Exchange

A switching or transmitting station owned by a public utility but not including business offices, storage, or repair shops or yards.

~~(12)~~(14) Utility Shop

The pole yard, maintenance yard, and/or administrative offices of a municipality or franchised utility.

(k) Agriculture Uses

(1) Agriculture

The use of land for the production of plants and animals useful to humans, including, to a variable extent, the preparation of these products for human use and their disposal by marketing or otherwise, and includes horticulture, floriculture, viticulture, forestry, dairy, livestock, poultry, bee, hatcheries, and any and all forms of farm products and farm production. This includes accessory uses for treating or storing farm products and equipment.

(2) Agritainment

Events and activities that allow for recreation, entertainment, and tourism that is in conjunction with on-going agricultural activities on-site (examples include corn mazes, hayrides, and petting zoos).

(3) Feedlot

An area or facility primarily engaged in feeding animals. These animals are kept for the products they produce or for eventual sale.

(4) Stable, Commercial

A structure housing horses that are boarded or rented to the public or any stable other than a private stable, but not including a sale barn, auction, or similar trading activity. Accessory uses are permitted and include but are not limited to offices, storage areas, caretaker's quarters, educating and training in equitation, and caring for, breeding, or training horses associated with the stable use.

(l) Accessory Uses

(1) Accessory Building

An accessory building or use is one that:

(A) Is subordinate to and serves a principal building or principal use; and

(B) Is subordinate in area, extent, or purpose to the principal building or principal use served; and

(C) Contributes to the comfort, convenience, and necessity of occupants of the principal building or principal use served; and

(D) Is located on the same building lot as the principal use served. If connected to the principal building, an open-air structure with three or fewer walls is not considered a building addition to the main building.

(2) Accessory Dwelling Unit

An additional dwelling unit integrated within a single-family dwelling, or located in a detached accessory building, such as carriage houses or agricultural-type outbuildings, located on the same lot as single-family dwellings. This use also includes similar uses like servant's quarters and guard residences.

(3) Barndominium

An accessory structure that includes living space and barn space on an agricultural property. This definition does not include barns detached from the living space operating as a separate structure.

(4) Carport

A structure open on a minimum of three sides designed or used to shelter vehicles, not to exceed 24 feet on its longest dimension.

(5) Donation Collection Bin

An accessory structure where clothes, goods, products, and other items are placed for donation and are subsequently delivered to a charitable organization for public consumption.

(6)

~~(6)~~ Fuel Pump

A stand-alone fuel dispenser that has one (1) or more nozzles or sets of nozzles, which in turn are separately connected to a distinct system that records the fuel pumped by a single vehicle and the corresponding payment owed for that fuel.

(7) Home Occupation

An occupation, profession, domestic craft, or economic enterprise that is customarily conducted in a "residential dwelling" as hereinafter defined, subject to compliance with each of the conditions established in Division 3.

(8) Garage

A detached accessory building or portion of the main building for the parking or temporary storage of automobiles of the occupants of the premises; if occupied by vehicles of others, it is a storage space.

(9) Outdoor Dining

An outdoor accessory space reserved for customers at a restaurant, which may be uncovered or covered by a canopy, awning, or similar design feature.

(10) Outdoor Display

The outside arrangement of goods, materials, products, or other equipment on a lot for consumer sales.

(11) Outdoor Storage

The outside keeping of goods, materials, products, containers, or other equipment on a lot.

(12) Retail Ice and Dispensed Water Sales

Establishment offering automated retail sale of bagged or bulk ice, and dispensed water through a coin-operated machine enclosed in a masonry structure; ice is frozen and bagged on-site.

(13) Service Bay

An opening in a wall or building, whether with or without bay doors, which is designed to allow vehicle access.

(14) Stable, Private

An accessory use designated for quartering horses on private property.

(15) Swimming Pool, Private

A swimming pool on private property for the use of the property owner, including family and guests.

(16) Wind Energy Conversion System

A wind-driven turbine (whether roof or tower mounted), and associated control or conversion electronics for the purpose of providing electrical power to a privately owned lot or parcel. These systems are considered accessory uses in all zoning districts.

(m) Temporary Uses

(1) Batching Plant

A temporary manufacturing facility for the production of concrete or asphalt during construction of a project and to be removed when the project is completed.

(2) Construction Yard

A storage yard or assembly yard for building materials and equipment directly related to a construction project and subject to removal at the completion of construction and subject to the same restrictions as field office.

(3) Farmers Market

A site or an area where space is rented to individual vendors who sell agricultural or horticultural goods. Vendors may also include specialty food producers selling baked goods, candies, chocolates, jams, jellies, spices, condiments, cheeses, eggs, milk, honey, meats, fish, pasta, and the like, but this definition does not include the sale of arts and crafts products, or any other item as specified in the "flea market" definition.

(4) Field or Sales Office

A building or structure, of either permanent or temporary construction, used in connection with a development or construction project for display purposes or for housing temporary supervisory or administrative functions related to development, construction or the sale of real estate properties within the active development or construction project. Permits for "temporary buildings" shall be issued for a period of time not to exceed 18 months. Extensions may be granted only by the City Council. Upon due notice and hearing by and before the City Council, any such permits granted may be revoked if the City Council finds the use of the building or structure is contrary to the intent of this article or results in increased noise, traffic, or other conditions considered to be a nuisance or hazard.

(5) Flea Market

A site where space inside or outside a building is rented to vendors on a short-term basis for the sale of merchandise. The principal sales shall include new and used household goods, personal effects, tools, artwork, small household appliances, and similar merchandise, objects, or equipment in small quantities. The term "flea market" shall not be deemed to include wholesale sales establishments or rental services establishments, but shall be deemed to include personal services establishments, food services establishments, retail sales establishments, and auction establishments.

(6) Itinerant Vendor

Any person, whether principal or agent, who engages in a temporary or transient business, either in one locality or in traveling from place to place, selling goods, wares, merchandise, and/or services and who, for the purpose of carrying on such business, hires, leases or occupies land for the exhibition and sale of such goods, wares, merchandise, and/or services.

(7) Seasonal Roadside Stand

Any structure or land used by the property owner, their family, or tenants to sell agricultural or horticultural produce, livestock, or merchandise principally produced on that farm, that is clearly an accessory use of the premises and does not change its character. This may also include the sale of produce grown on other farms and accessory products.

Sec. 9.04.082. Key Terms

(a) A Terms

(1) Administrative Official

The officer or other designated authority charged with administering and enforcing this Zoning Ordinance, or their duly authorized representative.

(2) Alley

A public minor way, which is used primarily for secondary vehicular service access to the back or side of properties otherwise abutting on a street or highway.

(3) Amenity

Specific items for multifamily development that provide opportunities for residents to participate in on-site leisure or recreational activities.

(4) Anna Code

The Anna City Code of Ordinances.

(5) Applicant

See Property Owner or Developer.

(6) Application

A written request for approval required by this Zoning Ordinance.

(7) Average Maintained Horizontal Illuminance

The density of light flux in an outdoor area or areas calculated:

(A) On a horizontal plane at ground level;

(B) As an average flux density over the surface of the outdoor area or areas; and

(C) Applying a light loss factor calculated by methods prescribed by the lighting handbook of the Illuminating Engineering Society or any successor publication; with calculations made by, or on the basis of lighting plans other information provided by, manufacturers or suppliers of outdoor light fixtures and made in a manner consistent with the lighting handbook of the Illuminating Engineering Society or any successor publication.

(8) Awning

A roof-like cover that can be removed that projects from the wall of a building.

(b) B Terms

(1) Balcony

An elevated platform projecting from the wall of a building and enclosed by a railing or parapet.

(2) Block

That property abutting on one side of the street and lying between the nearest intersecting or intercepting streets or nearest intersecting or intercepting street and railroad right-of-way, waterway, or other barrier to or gap in the continuity of development along such street.

(3) Board of Adjustment

The City of Anna's appointed Board of Adjustment.

(4) Building

Any structure built for the support, shelter, or enclosure of persons, chattels, or movable property of any kind. When such structure is divided into separate parts by one or more unpierced walls extending from the ground up, each part is deemed a separate building, except as regards minimum side yards.

(5) Building Line

A line parallel or approximately parallel to the street line at a specific distance therefrom marking the minimum distance from the street line that a building may be erected.

(6) Building Permit

A permit issued by the City before a building or structure is started, improved, enlarged, or altered as proof that such action complies with the Anna code.

(c) C Terms

(1) Caliper

The diameter of the trunk of a tree measured from breast height. This measurement is typically taken between four (4) to six (6) feet above ground level.

(2) Canopy

See Awning.

(3) Canopy Tree

A large tree that reaches a 25-foot minimum crown spread at maturity.

(4) Carport

A structure that is open on at least two (2) sides, covered with a roof and constructed specifically for the storage of one or more automobiles; utility room may be included.

(5) Certificate of Occupancy

An official certificate issued by the building inspector that indicates conformance with or approved conditional waiver from the zoning regulations and authorized legal use of the premises for which it is issued.

(6) City

The City of Anna, Texas, unless otherwise expressly stated.

(7) City Council

The duly elected governing body of the City of Anna, Texas.

(8) City Engineer

A licensed professional engineer, or firm of licensed professional consulting engineers, that has been specifically employed by the City to assist in engineering-related matters. The City Manager may assign the duties of the City Engineer to another City official whether or not licensed as a professional engineer.

(9) City Manager

The person holding the position of the City's chief executive officer (e.g., City Manager), as appointed by the City Council.

(10) Class 1 Lighting

All outdoor lighting used for, but not limited to, outdoor sales or eating areas, assembly or repair areas, advertising and other signs, recreational facilities, and other similar applications where color rendition is important to preserve the effectiveness of the activity. Recognized class 1 uses are: outdoor eating and retail food or beverage service areas; outdoor maintenance areas; display lots; assembly areas such as concert or theater amphitheaters.

(11) Class 2 Lighting

All outdoor lighting used for, but not limited to, illumination for walkways, roadways, equipment yards, parking lots, and outdoor security where general illumination for safety or security of the grounds is the primary concern.

(12) Class 3 Lighting

Any outdoor lighting used for decorative effects including, but not limited to, architectural illumination, flag and monument lighting, and illumination of trees, bushes, etc.

(13) Comprehensive Plan

The long-range planning and development policy of the City and adjoining areas as adopted by the City Council, including all its revisions and plan elements (including, but not limited to, the future land use plan, thoroughfare plan, parks master plan, etc.). This plan indicates the general locations recommended for various land uses, transportation routes, public and private buildings, streets, parks, water and wastewater facilities, and other public and private developments and improvements. The comprehensive plan is titled the Anna 2050 Comprehensive Plan.

(14) Contiguous

Lots are contiguous when at least one boundary line or point of one lot touches a boundary line, or lines, or point of another lot.

(15) Corner Lot

A lot that has more than one intersecting street frontage (with the exception of alleys).

(16) Corner Side Yard

The yard abutting a street on a corner lot perpendicular to where the primary building entrance is to be located.

(17) Cornices

The uppermost member of a classical entablature, consisting typically of a cymatium, corona, and bed molding.

(18) County

The department, offices, and services of Collin County, Texas.

(19) County Clerk

The person holding the office of County Clerk where they are responsible for local elections and maintaining public records. This term shall also include any designee of the County Clerk.

(20) Covered Parking

Any type of structure that provides cover over the length of a vehicle and shall be at least 10 feet wide and 20 feet deep. This includes carports, car garages, and any other structure that may cover a vehicle.

(21) Crown Spread

The average horizontal width of the tree's crown taken from dripline to dripline.

(22) Cul-de-sac

A street having only one outlet to another street, and that terminates on the opposite end by a vehicular turnaround or "bulb." The length of a cul-de-sac is to be measured from the intersection center point of the adjoining through street to the midpoint of the cul-de-sac bulb.

(23) Cutoff Light Fixture

A luminaire light distribution where no more than 25 candela per 1,000 lamp lumens is emitted above the horizontal.

(d) D Terms

(1) DBH

The abbreviation for diameter at breast height that measures the caliper of a tree.

(2) Decision-Making Body

The person or body responsible for acting on a development application.

(3) Density

The ratio of dwelling units per gross acre of platted area being developed.

(4) Developer

The owner of land proposed to be developed as a residential or nonresidential subdivision, or the owner's authorized representative. The developer may as be referred to as an applicant.

(5) Development

Any activity that requires the submission of a subdivision plat or the securing of a building permit.

(6) Directly Visible

Allowing a direct line-of-sight to the light source or lamp.

(7) Director

A person hired or designated by the City Manager to supervise or oversee the City's Development Services Department, and to exercise the authority of the Director. This includes the Director's designee.

(8) Dormer

An opening in a sloping roof, the framing of which projects out to form a vertical wall suitable for windows or other openings.

(9) Downspout

A pipe for carrying rainwater down from the roof's horizontal gutters.

(10) Downtown Arterial

A street classification identified in the Anna Master Thoroughfare Plan intended to primarily serve Downtown Anna. This street classification is reserved for State Highway 5/Powell Parkway.

(11) Downtown Type A Street

A street classification identified in the Anna Downtown Plan intended to primarily serve the Downtown Anna area.

(12) Downtown Type B Street

A street classification identified in the Anna Downtown Plan intended to primarily serve the Downtown Anna area.

(13) Downtown Type C Street

A street classification identified in the Anna Downtown Plan intended to primarily serve the Downtown Anna area.

(14) Downtown Type D Street

A street classification identified in the Anna Downtown Plan intended to primarily serve the Downtown Anna area.

(15) Dwelling Unit

A room or a group of rooms including cooking accommodations, occupied by one family, and in which not more than two persons, other than members of the family, are lodged or boarded for compensation at any one time.

(e) E Terms

(1) Easement

Any area within, on, over, and/or under real property in which the City (and/or another entity, such as a franchised utility) has an interest involving a right of use of the property and/or right to exclude uses of the property–such as requiring removal of all or any part of any buildings, fences, trees, shrubs, or other improvements or uses that interfere with the lawful purpose of the holder of the easement–including but not limited to those required for provision of sidewalks, utility services, or access to property or equipment owned and/or maintained by the City.

(2) Elevation

See Façade.

(3) Extraterritorial Jurisdiction (ETJ)

The area of land lying outside and adjacent to the corporate limits of the City over which the City has legal control as set forth in Chapter 42 of the Texas Local Government Code.

(f) F Terms

(1) Façade

The exterior of a building.

(2) Family

One or more persons, related by blood, marriage, or adoption, occupying a dwelling unit as a single, nonprofit housekeeping unit, but not including a group occupying a hotel, boardinghouse, club, dormitory, fraternity or sorority house.

(3) Fence

A permanent barrier that is not a screening device but offers privacy between uses. Fences are typically located on residential lots and are wood constructed. All fences shall comply with the requirements established in Sec. 9.04.046(d).

(4) Fenestration

The design, proportioning, and disposition of windows and other exterior openings of a building.

(5) Flat Roof

A roof laid horizontally at an angle of less than 10 degrees.

(6) Flood Lamp

A specific form of lamp designed to direct its output in a specific direction (a beam) with a reflector formed from the glass envelope of the lamp itself, and with a diffusing glass envelope.

(7) Floodplain

The land adjoining the channel of a river, stream, or watercourse that has been or may be covered by floodwater. Any land covered by the water of a 100-year frequency storm is considered in the floodplain and must comply with the engineering criteria found in the subdivision regulations and other relevant regulations of the City.

(8) Floodway

Area regulated by federal, state, or local requirements to provide for discharge for the base flow, so that the cumulative increase in water surface elevation is no more than a designated amount within the 100-year floodplain. A river, channel, or other watercourse and the adjacent land areas that must be reserved to discharge the base flood without cumulatively increasing the water surface elevation more than a designated height. Normally, the floodway will include the stream channel and that portion of the adjacent land areas required to pass the base flood (100-year flood) discharge without cumulatively increasing the water surface elevation at any point more than one foot above that of the pre-floodway condition, including those designated on the flood insurance rate map.

(9) Footcandle

One lumen per square foot. Unit of illuminance. It is the luminous flux per unit area in the Imperial system. One footcandle equals approximately 10 (10.76) lux.

(10) Front Yard

A yard across the full width of the lot extending from the front line of the primary building to the front property line.

(11) Frontage

All the property abutting on one side of a street between intersecting or intercepting streets, or between a street and a right-of-way, waterway, end of a dead-end street, or village boundary measured along the street line. An intercepting street shall determine only the boundary of the frontage on the side of the

street which it intercepts. Where a lot abuts more than one street, the Planning and Zoning Commission shall determine the frontage for purposes of this Article.

(12) Frontage Buildout

The percentage of the building facade that shall be located within the build -to zone (BTZ), calculated by the width of the building facade, not lot width. Build -to percentage is further defined as:

(A) Facade articulation elements, such as window or wall recesses and projections, shall be considered to meet any required build -to percentage.

(B) Public open spaces and outdoor dining areas that are between a building facade and a frontage and are no more than an average of 24 inches above or below grade of adjacent sidewalk are counted as meeting the build -to percentage.

(C) Common or private open spaces of residential development bounded on three sides by a building and no more than an average of 24 inches above or below grade of adjacent sidewalk are counted as meeting the build -to percentage.

(13) Full Cutoff Light Fixture

A luminaire with light distribution such that no light is emitted above the horizontal.

(g) G Terms

(1) Gable Roof

A roof with two slopes – front and rear – joining at a single ridge line parallel to the entrance façade.

(2) Gambrel Roof

A ridged roof with two slopes at each side, the lower slopes being steeper than the upper slopes.

(3) Garbage, trash, or refuse container

A container used for, but not limited to, receiving garbage designed and intended to be lifted by forks or other device mounted on a vehicle and the contents emptied into that part of the vehicle designed to receive the same.

(4) Glare

The sensation produced by a bright source within the visual field that is sufficiently brighter than the level to which the eyes are adapted to cause annoyance, discomfort, or loss in visual performance and visibility; blinding light. The magnitude of glare depends on such factors as the size, position, brightness of the source, and on the brightness level to which the eyes are adapted.

(5) Grade

When used as a reference point in measuring height of a building, the “grade” shall be the average elevation of the finished ground at the exterior walls of the primary building.

(h) H Terms

(1) Height

The vertical distance from the top of the building or structure's foundation to either the highest point of that building or highest point of any permanent part of that structure other than the building. Height, where not regulated in feet, is regulated by stories. A story is equal to fourteen (14) feet measured vertically for purposes of measuring structures (see Figure 18: Height Measurement).

Figure 18: Height Measurement

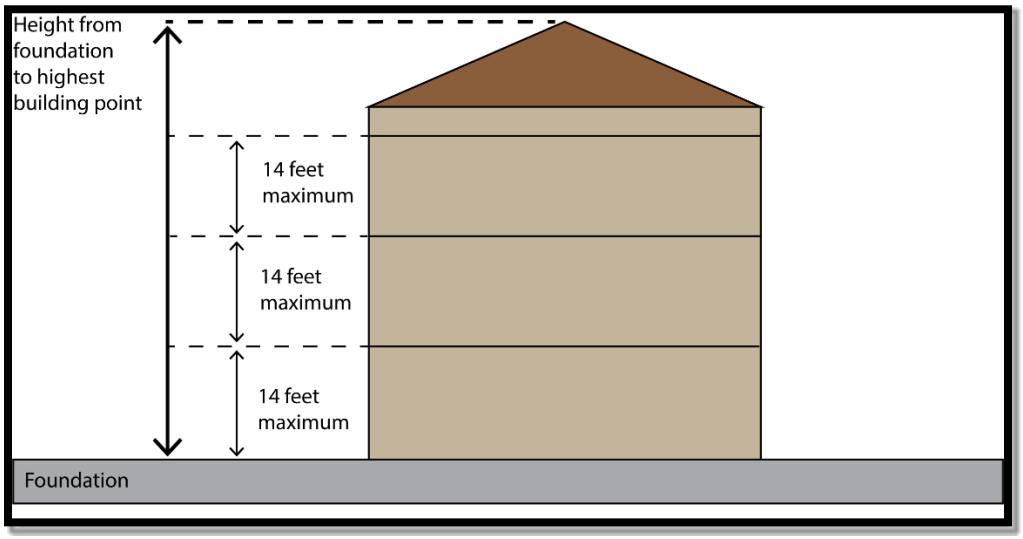

(2) Highway

A street classification identified in the Anna Master Thoroughfare Plan reserved for streets that have consistent speeds of 55 mph or more and have, or are planned to have, frontage streets for access.

(3) Hip Roof

A roof with four sloped sides. The sides meet at a ridge at the center of the roof. Two of the sides are trapezoidal in shape, while the remaining two sides are triangular, and thus meet the ridge at its end-point.

(4) Homeowners Association

A formal nonprofit organization operating under recorded land agreements through which:

(A) Each lot and/or property owner in a specific area is automatically a member; and

(B) Each lot or property interest is automatically subject to a charge for a proportionate share of the expense for the organization's activities, such as the maintenance of common property; and

(C) The charge, if unpaid, becomes a lien against the nonpaying member's property.

This term is synonymous with Property Owners Association.

(i) I Terms

(1) IESNA

The acronym for the Illuminating Engineering Society of North America (IESNA).

(2) Illuminance

The amount of light falling onto a unit area of surface (luminous flux per unit area), measured in lumens per square meter (lux) or lumens per square foot (footcandles).

(3) Installed

The attachment, or assembly fixed in place, connected to a power source, of any outdoor light fixture.

(4) Internal Landscape Area

The remaining property exclusive of the street yard and required landscape buffers.

(5) Intersection Visibility Triangle

The triangular-shaped area at the intersection of two streets that must be kept clear to ensure visibility at the intersection.

(j) J Terms

(1) Junk

Those materials and products of older scrap copper; brass; rope; rags; batteries; paper; trash; rubber; debris; waste; junked, dismantled, scrapped or wrecked motor vehicle or associated parts; iron; steel; or other old or scrap materials.

(k) K terms

(1) Key Lot

An interior lot, one side of which is contiguous, or separated only by an alley, to the rear line of a corner lot.

(l) L Terms

(1) Landscape Plan

An independent plan that is a part of the site plan process that shows a site's required landscaping.

(2) Light Trespass

Light falling where it is not wanted or needed, typically across property boundaries.

(3) Lighting Zones

The four lighting zones are based on the zoning districts or overlays established by the zoning ordinance.

(4) Loading Space

An off-street space or berth on the same lot with a building or contiguous to a group of buildings for the temporary parking of a commercial vehicle while loading or unloading merchandise or materials, and which abuts upon a street, alley, or other appropriate means of access.

(5) Local Street

A street classification identified in the Anna Master Thoroughfare Plan intended to provide users with a high amount of access. All streets that are not identified in the Anna 2045 Master Thoroughfare Plan are considered Local Streets. A Local Street typically has a design of 31 feet of pavement width that allows one lane in each direction and parking on both sides of the street.

(6) Lot

A divided or undivided tract or parcel of land having frontage on a public or private street, and which is, or which may in the future be, offered for sale, conveyance, transfer or improvement; which is designated as a distinct and separate tract; and which is identified by a tract or lot number or symbol in a duly approved subdivision plat which has been properly filed of record at the County.

(7) Lot Coverage

The percentage of the total area of a lot occupied by the base (first story or floor) of buildings located on the lot.

(8) Lot Depth

The distance between the front lot line and the rear lot line.

(9) Lot of Record

A lot, which is part of a subdivision, the plat of which has been recorded in the office of the county clerk of Collin County, or a parcel of land, the deed for which was recorded in the office of the county clerk, Collin County, prior to January 1, 1986. A lot of record is an official lot having less area, width, or depth than the requirements of this Zoning Ordinance prior its adoption.

(10) Lot Width

The distance parallel to the front lot line, measured at the front building setback line. Lot width on a curving front lot line means the distance parallel to the tangent of the front lot line at the building setback line. The lot width and the lot frontage may have different lengths on an irregularly shaped lot as they are measured at different points on the lot.

(11) Louver

A window blind or shutter with horizontal slats angled to let in light and air, but keep out the rain, direct sunshine, and noise.

(12) Lumen

A unit of luminous flux; used to measure the amount of light emitted by lamps.

(13) Luminaire

The complete lighting assembly (including the lamp, housing, reflectors, lenses and shields), less the support assembly (pole or mounting bracket); a light fixture. For purposes of determining total light output from a luminaire or light fixture (see under this section, “Outdoor light output, total”), lighting assemblies that include multiple unshielded or partially shielded lamps on a single pole or standard shall be considered as a single unit.

(14) Luminous Tube

A glass tube filled with a gas or gas mixture (including neon, argon, mercury, or other gases), usually of small diameter (10-15 millimeter), caused to emit light by the passage of an electric current, and commonly bent into various forms for use as decoration or signs. A neon tube does not include common fluorescent tubes.

(15) Lux

A unit of illuminance equal to one lumen per square meter. One lux equals approximately 0.1 (0.093) footcandles.

(m) M Terms

(1) Major Arterial

A street classification identified in the Anna Master Thoroughfare Plan intended to provide mobility to nearby areas outside the City while also providing access to major developments. The typical cross-section is a six-lane divided design within 120 feet of total right-of-way (ROW) width.

(2) Major Collector

A street classification identified in the Anna Master Thoroughfare Plan intended to connect neighborhoods to each other with a high amount of access, but a low amount of mobility compared to arterials or highways. A Major Collector typically has no dwellings fronting on it, and are designed within 80 feet of ROW with a higher travel speed than a Minor Collector.

(3) Major Recreational Equipment

Includes boats and boat trailers, travel trailers, pickup campers, or coaches (designed to be mounted on automotive vehicles), motorized dwellings including motor homes, tent trailers, and the like, and cases or boxes used for transporting recreational equipment, whether occupied by such equipment or not.

(4) Major Revisions/Amendments

Any revision(s) that the Director determines is not a minor revision. A major revision constitutes a new application submittal.

(5) Mansard Roof

A roof with two slopes on each side, with the lower slope being nearly vertical and the upper slope nearly horizontal.

(6) Mayor

The elected person who is the presiding officer of all Council meetings, is the official head of the City government, and is entitled to vote on all items before the City Council, except as otherwise restricted by the Anna Charter.

(7) Mechanical Equipment

Equipment such as air-conditioning compressors, swimming pool pumps and filters, and similar devices that are intended to provide a performative function for a use, building, or structure.

(8) Minor Arterial

A street classification identified in the Anna Master Thoroughfare Plan intended to provide connections between major developments and neighborhoods and are best suited for roads with moderate speeds. The typical cross section is a 4-lane divided design within 90 feet of total ROW width.

(9) Minor Collector

A street classification identified in the Anna Master Thoroughfare Plan intended to connect neighborhoods to each other with a high amount of access, but a low amount of mobility compared to arterials or highways. A Minor Collector typically provides mobility within a neighborhood but does not have houses fronting them, and are designed as a 3-lane undivided roadway within 60 feet of ROW with a lower travel speed than a Major Collector.

(10) Minor Revisions/Amendments

Those revisions that are necessary in light of technical considerations discovered after the decision on the development application, and which do not substantively change the character of the development approval.

(11) Molding

A decorative strip of wood used for architectural purposes.

(12) Multi-class Lighting

Any outdoor lighting used for more than one purpose, such as security and decoration, such that its use falls under the definition of two or more classes as defined for class 1, 2, and 3 lighting.

(n) N Terms

(1) Net Acreage

The total area of the development project.

(2) Network Node

A type of telecommunications facility, also known as small wireless facility.

(3) Nonconforming Lot

A lot that does not conform to the regulations of this Zoning Ordinance, but that was lawfully established under the regulations in force at the time the lot was established and has been in regular use since that time.

(4) Nonconforming Site Feature

A site plan feature, such as landscaping, parking, setbacks, etc., that does not conform to the regulations of this Zoning Ordinance, but that was lawfully established under the regulations in force at the time the site plan was approved and has been in regular use since that time.

(5) Nonconforming Structure

A building or structure, or portion thereof, that does not conform to the regulations of this Zoning Ordinance, but that was lawfully constructed under the regulations in force at the time of construction.

(6) Nonconforming Use

A use that does not conform to the use regulations of this Zoning Ordinance, but that was lawfully established under the regulations in force at the time the use was established and has been in regular use since that time.

(7) Nonconformity

The collective term for all nonconforming situations.

(o) O Terms

(1) Offset

A specified projection or recession that runs vertically along the entirety of a building wall.

(2) Opaque

That a material does not transmit light from an internal illumination source.

(3) Oriel

A bay window supported from below by corbels or brackets.

(4) Ornamental Tree

A small tree that reaches a 15-foot minimum crown spread at maturity.

(5) Outdoor Light Fixture

An outdoor illuminating device, outdoor lighting or reflective surface, luminous tube, lamp or similar device, permanently installed or portable, used for illumination, decoration, or advertisement. Such devices shall include, but are not limited to lights used for:

(A) Parking lot lighting;

(B) Roadway lighting;

(C) Buildings and structures;

(D) Recreational areas;

(E) Landscape lighting;

(F) Billboards and other signs (advertising or other);

(G) Product display area lighting;

(H) Building or structure decoration; and

(I) Building overhangs and open canopies.

(6) Outdoor Light Output, Total

The initial total amount of light, measured in lumens, from all lamps used in outdoor light fixtures. The term includes all lights and luminous tubing used for class 1, class 2, class 3, and multi-class lighting, and lights used for external illumination of signs, but does not include lights used to illuminate internally illuminated signs or luminous tubing used in neon signs. For lamp types that vary in their output as they age (such as high-pressure sodium, fluorescent, and metal halide), the initial lamp output, as defined by the manufacturer, is the value to be considered. For determining compliance, total outdoor light output standards, the light emitted from lamps in outdoor light fixtures is to be included in the total output as follows:

(A) Outdoor light fixtures installed on poles (such as parking lot luminaires) and light fixtures installed on the sides of buildings or other structures, when not shielded from above by the structure itself as defined in subsections (B), (C), and (D) of this definition, are to be included in the total outdoor light output by simply adding the initial lumen outputs of the lamps;

(B) Outdoor light fixtures installed under canopies, buildings (including parking garage decks), overhangs or roof eaves where all parts of the lamp or luminaire are located at least five feet but less than 10 feet from the nearest edge of the canopy or overhang are to be included in the total outdoor light output as though they produced only one-quarter of the lamp's rated initial lumen output;

(C) Outdoor light fixtures installed under canopies, buildings (including parking garage decks), overhangs or roof eaves where all parts of the lamp or luminaire are located at least 10 feet but less than 30 feet from the nearest edge of the canopy or overhang are to be included in the total outdoor light output as though they produced only one-tenth of the lamp's rated initial lumen output; and

(D) Outdoor light fixtures installed under canopies, buildings (including parking garage decks), overhangs, or roof eaves where all parts of the lamp or luminaire are located 30 or more feet from the nearest edge of the canopy or overhang are not to be included in the total outdoor light output. Such lamps must however conform to the lamp source and shielding requirements of subsection (g) of this section.

(7) Outside Runs

Those associated animal facilities that are fenced in and designated as an area where animals run, play, and exercise.

(p) P Terms

(1) PAM

The abbreviation for a Pre-Application Meeting that is optional for application submittal.

(2) Parapet

A low, protective wall at the edge of a terrace, balcony, or roof, especially that part of an exterior wall, fire wall, or party wall that rises above the roof.

(3) Parking Space

A permanently surfaced area either within a structure or in the open, not on public right-of-way, exclusive of driveways or access drives, for the parking of one vehicle.

(4) Permeable Surface

A surface that does not impede the absorption of water.

(5) Person

An individual, company, joint stock company, firm, proprietorship, business, corporation, organization, government or governmental subdivision or agency, business trust, estate, trust, partnership, co-partnership, association, and any other legal entity or their legal representatives, agents or assigns. Notwithstanding any other provision of the code, each and every code provision–including but not limited to every prohibition, requirement, and penalty–applies to both natural persons and corporations, partnerships, and all other legal entities or organizations.

(6) Pitched Roof

A roof that has a slope.

(7) Planned Development

(A) Land under unified control, including developed as a whole; in a single development operation or a definitely programmed series of development operations, including all lands and buildings; for principal and accessory structures and uses substantially related to the character of the district; according to comprehensive and detailed plans which include not only streets, utilities, and lots or building sites, but also site plans, floor plans, and elevations of all buildings as intended be located, constructed, used, and related to each other, and detailed plans for other uses and improvements on the land as related to the buildings; and with a program for provision, operation and maintenance of such areas, improvements, facilities, and services as will be for common use by some or all of the occupants of the district, but will not be provided, operated, or maintained at general public expense.

(B) A concept and a zoning classification that may include, in addition to planned unit development, commercial, shopping center, and industrial uses or combination thereof, which may be intended to serve areas within the district and areas without the district.

(8) Planning and Development Regulations

Chapter/Article 9 on the Anna Code of Ordinances.

(9) Planning and Zoning Commission

The City of Anna's appointed Planning and Zoning Commission.

(10) Planning Department

The City's department, and related employees, that have been specifically created and maintained by the City to assist in planning and zoning related matters. This term shall also apply to any official City employee in the Planning Department, including any practicing, professional land planner, administrative support, and/or firm of professional land planners.

(11) Plat

A preliminary plat of a subdivision, a final plat of a subdivision, a development plat, or an amending plat or replat, as determined by the context.

(12) Plinth

The usually square slab beneath the base of a column, pier, or pedestal. Also, a continuous, usually projecting course of stones forming the base or foundation of a wall.

(13) Porte-cochere

A permanent structure that is structurally and aesthetically integrated into a residence, and that is erected over a driveway to allow for the parking of vehicles. Such structure is open on two (2) sides and provides covered, direct access to a primary or secondary entrance to the structure.

(14) Primary Building

A building in which is conducted the principal use of the lot on which it is situated.

(15) Private Street

A classification of streets that are owned and maintained by a homeowners' association or property owner's association, and which are not dedicated to the public.

(16) Property Owner

Any person or firm, association, syndicate, general or limited partnership, corporation, trust or other legal entity, or any agent thereof, that has sufficient proprietary interest in the land sought to be subdivided to commence and maintain proceedings to subdivide the same under these subdivision regulations. In any event, the term "property owner" shall be restricted to include only the owner(s) or authorized agent(s) of such owner(s), such as a developer, of land sought to be subdivided.

(17) Public Hearing

A meeting held by the Planning and Zoning Commission, Board of Adjustment, or City Council where action is conducted on an application after public commentary is heard.

(18) Public Improvements

Facilities, infrastructure, and other appurtenances, typically owned and maintained by the City (but not necessarily located upon City-owned property or right-of-way). Public improvements can be located upon public property or upon private property in a public easement. Public improvements serve a public purpose in providing a needed service or commodity, such as wastewater collection and treatment and water storage and distribution, and protect the general health, safety, welfare and convenience of the City's residents, including efficiency in traffic circulation and access for emergency services. The term "public improvements" shall not include facilities or infrastructure of private providers of utility services other than water and wastewater, but shall be deemed to include facilities and infrastructure that the City would normally require of a development but which will be owned and maintained by an entity such as a homeowners' association, as in the case of private streets.

(19) Public View

A view from any public or City right-of-way or access easement.

(q) Q Terms

(1) Quoin

An external solid angle of a wall, or one of the stones forming such an angle, usually differentiated from the adjoining surfaces by material, texture, color, size, or projection.

(r) R Terms

(1) Rear Yard

A yard between the rear property line and the rear line of the primary building and the side property lines.

(2) Recreational Vehicle

A vehicular, portable item that can be transported over the highways and containing living or sleeping accommodations, such structure being designed and actually used as a temporary dwelling during travel for recreation and pleasure purposes, and not exceeding eight feet in width and not exceeding 22 feet in length.

(3) Residential District

Those zoning districts where residential uses are the primary uses. Residential Districts are those designated as SF-20.0, SF-14.5~~, SF-20.0~~, SF-12.0, SF-10.5, SF-8.4, SF-7.2, SF-6.0, MD, and MF, unless specified otherwise.

(4) Rezoning

An amendment to the Official Zoning Map to effect a change in the nature, density, or intensity of uses and development characteristics allowed on a property.

(5) Right-of-Way

A parcel of land occupied, or intended to be occupied, by a street or alley. Where appropriate, "right-of-way" may include other facilities and utilities such as sidewalks; railroad crossings; electrical, communication, oil and gas facilities; water and sanitary and storm sewer facilities; street improvements; and any other special use. The use of right-of-way shall also include parkways and medians outside of the paved portion of the street. The usage of the term "right-of-way" for land platting purposes shall mean that every right-of-way hereafter established and shown on a final plat is to be separate and distinct from

the lots or parcels adjoining such right-of-way and shall not be included within the dimensions or areas of such lots or parcels.

(6) Roof

The external upper covering of a building, including the frame for supporting the roofing.

(7) Roof Line

The height that is defined by the intersection of the roof of the building and the wall of the building; except, for mansard-type roofs, the roof line means the top of the lower slope of the roof. Roofs with parapet walls completely around the building and not exceeding four feet in height may be considered as the roof line.

(s) S Terms

(1) Screening Device

A barrier of permanent material of sufficient height and density so that the objects being screened are not visible from any point on the lot line when viewed from the ground level. All screening devices shall comply with the requirements established in Sec. 9.04.046(c).

(2) Searchlight

A lighting assembly designed to direct the output of a contained lamp in a specific tightly focused direction (a beam) with a reflector located external to the lamp, and with a swiveled or gimbaled mount to allow the assembly to be easily redirected. Searchlights include such lights that are used commonly to sweep the sky for advertisement purposes.

(3) Setback

A line, generally parallel with and measured from the property line, defining the limits of a yard in which no building, other than accessory buildings nor structure may be located above ground, except as may be provided in this Zoning Ordinance. See definition of "Yard."

(4) Shielding

When the light emitted from the fixture is projected below a horizontal plane running through the lowest point of the fixture where light is emitted.

(5) Shutters

Pairs of solid or slatted window coverings, traditionally hinged to the exterior of a building to either side of a window, used to block light or wind from the interior of a building.

(6) Side Yard

A yard between the primary building and the adjacent side property line, and extending entirely from a front yard to the rear yard.

(7) Site Plan

A detailed, scaled drawing of all surface improvements, structures, uses, and utilities proposed for development associated with this Zoning Ordinance.

(8) Specific Use Permit

A permit granted on a discretionary and conditional basis by the City Council, which authorizes a land use in a zoning district in which that use is not normally permitted. All requirements of a Specific Use Permit are in addition to and supplement Zoning Ordinance requirements.

(9) Specified Anatomical Area

Less than opaquely covered human genitals, pubic region, or pubic hair; or less than opaquely covered perineum, buttock, or anus; or less than opaquely covered female breast below a point immediately above the top of the areola.

(10) Specified Sexual Activities

Human genitals in a discernible state of sexual stimulation or arousal; or acts or representations of human masturbation, sexual intercourse, sodomy, bestiality, excretory functions, sadism, masochism, lewd exhibition of genitals; or fondling or other erotic touching of human genitals, pubic region or pubic hair, perineum, buttock or anus, or female breast.

(11) Spot Lamp

A specific form of lamp designed to direct its output in a specific direction (a beam) with a reflector formed from the glass envelope of the lamp itself, and with a clear or nearly clear glass envelope. Spot lamps are those lamps so designated by the manufacturers.

(12) Spot Light

A lighting assembly designed to direct the output of a contained lamp in a specific tightly focused direction (a beam) with a reflector located external to the lamp.

(13) Staff Committee

The committee responsible for providing commentary and insight at Pre-Application Meetings.

(14) Stealth Design

Any telecommunication facility that is designed to blend into the surrounding environment. Examples of stealth facilities may include architecturally screened roof-mounted antennas, building-mounted antennas painted to match the existing structure, antennas integrated into architectural elements, and antenna structures designed to look like another object, such as a light pole, clock towers, bell steeples, or a tree.

(15) Stepback

A line, generally parallel with and measured from the property line, in which a structure’s third or greater story is set back.

(16) Story

That portion of a building included between the surface of a floor and the surface of a floor next above it, or if there is no floor above it, then the portion of the building between the surface of a floor and the ceiling or roof above it. A basement shall be counted as a story for the purposes of height regulations, if the vertical distance from grade to the ceiling is more than seven feet.

(17) Street

That part of a right-of-way, whether public or private and however designated, which provides vehicular access to adjacent land and other streets and may include additional facilities for transportation of persons, utilities, drainage, and other street improvements.

(18) Street Yard

The area between the front property line and the minimum front setback line.

(19) Street, Downtown Arterial

See Downtown Arterial.

(20) Street, Downtown Type A

See Downtown Type A Street.

(21) Street, Downtown Type B

See Downtown Type B Street.

(22) Street, Downtown Type C

See Downtown Type C Street.

(23) Street, Downtown Type D

See Downtown Type D Street.

(24) Street, Highway

See Highway.

(25) Street, Local

See Local Street.

(26) Street, Major Arterial

See Major Arterial.

(27) Street, Major Collector

See Major Collector.

(28) Street, Minor Arterial

See Minor Arterial.

(29) Street, Minor Collector

See Minor Collector.

(30) Stringcourse

A horizontal course of brick or stone flush with or projecting beyond the face of a building, often molded to mark a division in the wall.

(31) Structural Alteration

Any change, addition, or modification in construction in the supporting members of a building, such as exterior walls, bearing walls, beams, columns, foundations, girders, floor joists, roof joists, rafters, or trusses.

(32) Subdivision

A division or re-division of any tract of land situated within the City's corporate limits or its extraterritorial jurisdiction into two or more parts, lots or sites, for the purpose, whether immediate or future, of sale, division of ownership, or building development. "Subdivision" includes re-subdivisions of land or lots that are part of a previously recorded subdivision.

(33) Submittal

See Application.

(34) Submittal Date

The date when forms, fees, plans, information, and copies have been submitted to the City (or other employee authorized to received applications) for the purposes of meeting requirements for a development application.

(t) T Terms

(1) TCEQ

The Texas Commission on Environmental Quality or any successor agency of the State of Texas.

(2) Temporary Lighting

Lighting which does not conform to the provisions of this section and which will not be used for more than one 30-day period within a calendar year, with one 30-day extension. Temporary lighting is intended for uses that by their nature are of limited duration, for example, holiday decorations, civic events, or construction projects.

(3) Tenant

A distinct user that occupies a portion of a multi-tenant building, lot, or development, regardless of the legal arrangement allowing occupancy between the owner of the building, lot, or development and the user.

(u) U Terms

(1) Uplighting

Lighting that is directed in such a manner as to shine light rays above the horizontal plane.

(2) Use

The purpose for which land or a building or structure thereon is designed, arranged, intended, or maintained or for which it is or may be used or occupied. This definition does not alter or affect the definition of nonconforming use.

(v) V Terms

(1) Variance

An adjustment in application of the specific regulations of the zoning regulations to a particular parcel of property which, because of special conditions or circumstances, peculiar to the particular parcel, is

necessary to prevent the property from being deprived of rights and privileges enjoyed by other parcels in the same vicinity and zoning district.

(2) Vehicle

Any automobile, truck, camper, van, trailer, or any device capable of transporting persons or property and shall be considered a "vehicle" in both moving and stationary modes, irrespective of condition.

(3) Visible Light Reflectance

The amount of light reflected away by a glass window's film.

(w) W Terms (Reserved)

(x) X Terms

(1) Xeriscape

A type of landscaping design that uses a combination of native plants and grasses, approved hardscapes, and drought-tolerant ground covers and planting materials for the purpose of conserving water and protecting the local environment.

(y) Y Terms

(1) Yard

The open area between building setback lines and lot lines.

(z) Z Terms

(1) Zoning District

A portion of the territory of the city within which certain uniform regulations and requirements or various combinations thereof apply under the provisions of the city's zoning ordinance, as amended.

(2) Zoning Map

The official map of Anna upon which the boundaries of the various zoning districts are drawn and which is an integral part of the Zoning Ordinance, which may also be cited as the Official Zoning Map.

(3) Zoning Ordinance

The City of Anna's zoning regulations as codified in Article 9.04 of the Anna Code, as amended, as well as zoning ordinances not codified in this code that zone or rezone particular tracts of property.

Item No. 6.g.

Planning & Zoning Commission Agenda
Staff Report

Meeting Date: 9/9/2026
Staff Contact: Kaleb Kentner

AGENDA ITEM:
Conduct a Public Hearing/Consider/Discuss/Action on Amendments to Article 9.02 (Subdivision Regulations) of the City of Anna Code of Ordinances.

SUMMARY:
This item is a recommendation to City Council on an amendment to Article 9.02 (Subdivision Regulations).

Recommended approval of the item as submitted. This item is tentatively scheduled for the September 22, 2026 City Council meeting.

BACKGROUND:
The attached text is a rewrite of Article 9.02 (Subdivision Regulations) to modernize and streamline processes for the subdivision of land.

- Creating new procedures to streamline the development process.
- Simplifying plat names.
- Removing redundancies by moving text to Article 9.03 (Design Standards).

ATTACHMENTS:
1. Draft (Article 9.02 Subdivision Regulations)
2. Current (2023 Subdivision Regulations)

Contents

Division 1. General

9.02.001. Authority
9.02.002. Jurisdiction
a) Enactment and Effective Date
9.02.003. Purpose
9.02.004. Subdivision Rules
9.02.005. Exemptions
9.02.006. Violations and Penalties
9.02.007. Severability
9.02.008. Definitions

Division 2. Administration

9.02.041. Interpretation
9.02.042. Platting Determination and Delegation
a) Development Services Director
b) City Engineer
c) Planning and Zoning
d) City Council
9.02.043. Public Improvement Districts
9.02.044. Application Procedure

Division 3. Plat Types

9.02.061. Preliminary Plat
9.02.062. Final Plat
9.02.063. Conveyance Plat

Division 4. Subdivision Design Standards and Procedures

9.02.080. Monuments
9.02.081. Lots and Blocks
9.02.082. Streets, Alleys, and Sidewalks
9.02.083. Rights-of-Way
9.02.084. Easements
9.02.085. Water and Wastewater Facilities
9.02.086. Storm Water Collector and Conveyance Systems
9.02.087. Parks and Open Space
9.02.088. Street Lighting
9.02.089. Construction Procedures
9.02.090. Inspection Procedures
9.02.091. Issuance of Building Permits

Division 5. Requirements for Acceptance of Subdivisions by City

9.02.110. Acceptance of Improvements
9.02.111. Developer's Guarantee of Public Improvements
9.02.112. Temporary Improvement
9.02.113. Governmental Units
9.02.114. Failure to Complete Improvements
9.02.115. Acceptance of Dedication Offers
9.02.116. Maintenance and Guarantee of Public Improvements

Division 1. General

9.02.001. Authority. This article is adopted under the authority of the state constitution and state law, including Chapter 212, Texas Local Government Code.

9.02.002. Jurisdiction. Platting is required for all land to be improved for public or private use or subdivided within the corporate limits of Anna, Texas, and within its extraterritorial jurisdiction as provided by Texas Local Government Code Chapter 212, including Subchapter B. From and after the effective date, this chapter shall govern all subdivisions of land within the corporate limits and the extraterritorial jurisdiction (ETJ) of the city, subject to applicable state law. The provisions of these Subdivision Regulations expressly extend to all areas inside the City limits and throughout the City's extraterritorial jurisdiction (ETJ), as either may be adjusted in the future, and as provided in an interlocal agreement with Collin County.

(a) Enactment and Effective Date. In order that land may be subdivided in accordance with these policies, these subdivision regulations are hereby made effective as of the date of their adoption by ordinance. All applications for plat approval, including final plats, that are pending on the effective date of this ordinance, and which have not lapsed shall be reviewed under the regulations in effect immediately preceding the effective date of this ordinance.

9.02.003. Purpose. These rules are adopted to promote the health, safety, morals, or general welfare of the City of Anna and the safe, orderly, and healthful development of the city and its extraterritorial jurisdiction.

9.02.004. Subdivision Rules. The provisions of this chapter, together with the technical standards contained in the City Design Standards Manual adopted by the City Council, constitute the subdivision rules of the city and shall apply inside the city limits and within the city's extraterritorial jurisdiction (ETJ).

In the event of conflict between provisions of this chapter and the technical standards set forth in the City Design Standards Manual, the provisions of this chapter shall control and take precedence. The Development Services Director shall be responsible for identifying and clarifying any such conflicts and, where an amendment to the City Design Standards Manual or this chapter is warranted to resolve the conflict, shall bring a formal recommendation to the Planning Commission for its consideration.

9.02.005. Exemptions. The provisions of this ordinance shall not apply to any of the following:

(a) development of land legally platted and approved prior to the effective date of this ordinance, except as otherwise provided for herein;
(b) development of one or two-family residentially zoned land constituting a single tract, lot, site, or parcel for which a legal deed of record describing the boundary of said tract, lot, site, or parcel was filed of record in the Deed Records of Collin County, Texas on or prior to January 1, 2026;
(c) existing cemeteries complying with all state and local laws and regulations;
(d) the creation of a remainder of a tract caused by the platting of a portion of the tract provided the remainder is larger than 20 acres;
(e) divisions of land created by order of a court of competent jurisdiction; or
(f) when a building permit is requested for unplatted or already platted parcels for one or more of the following activities;
    (1) Replacement or reconstruction of an existing primary single-family structure;
    (2) Building additions, such as increasing the square footage of a residence or other structure;
    (3) Accessory buildings (as defined in the Zoning Ordinance);
    (4) Remodeling or repair; or
    (5) Moving a structure off a lot or parcel, or for demolition.

9.02.006. Violations and Penalties. In addition to all other remedies and relief available to the City by law or in equity for a violation of these subdivision regulations, the following non-exclusive forms of relief shall be available to the City:

(a) Any person who violates any of these regulations for lands within the corporate boundaries of the City shall be subject to a fine in accordance with the general penalty provided in the City Code of Ordinances per day or the highest amount authorized under law, with each day constituting a separate violation.
(b) Appropriate civil actions and proceedings may be maintained in law or in equity to prevent unlawful construction, to recover damages, to impose additional penalties, [or] to restrain, correct or abate a violation of these regulations, whether such violation occurs with respect to lands within the corporate boundaries of the City or within the City's extraterritorial jurisdiction. These remedies shall be in addition to the penalties described above.

(c) The City may refuse to grant final acceptance of a subdivision that does not fully and completely comply with all terms and conditions of these subdivision regulations including, but not limited to, the refusal to issue building permits and certificates of occupancy and the refusal to connect the property to City utilities and services.

9.02.007. Severability. If any provision of this ordinance shall be adjudged by a court of competent jurisdiction to be invalid, the invalidity shall not affect other provisions or applications of this ordinance which can be given effect without the invalid provision, and to this end the provisions of this ordinance are hereby declared to be severable.

9.02.008. Definitions. For the purposes of these rules, the following terms, phrases, words, and their derivations shall have the meanings ascribed to them in this section or in the zoning regulations.

Access road. This is a general term inclusive of all public streets, private streets, parking lot lanes, alleys, or other means of access to a lot. Where two access roads are required for a residential subdivision, the required area to be served shall be determined by each final plat unless otherwise approved by the Development Services Director or designee.

Agricultural activity. The preparation and maintenance of land for the purpose of farming (the production of food and fiber products), grazing or raising livestock (not including feed lots), aquaculture, sod production, production of trees and plants for landscaping (not including commercial logging and timber harvesting), and other similar customary agribusiness operations. This does not include "grading" for development purposes.

Alley. A public or private right-of-way primarily designed to serve as a secondary access roadway to the side or rear of those properties whose principal frontage is on some other street.

Application. The documents, maps, drawings, and fees submitted to the city for review.

Block. A unit of land bounded by streets or by a combination of street right-of-way and public lands, railroad right-of-way, shorelines of waterways, or boundary lines of municipalities that typically contains individual lots.

Comprehensive Plan. A plan prepared and adopted by the City Council, and including any part of such plan separately adopted and any amendment to such plan, or parts thereof, setting forth goals, policies, and guidelines intended to direct the present and future development of the city.

Dedication. The granting of land or use of the land as part of and a condition of development, such as the granting of a right-of-way for a public street.

Development. Any human-initiated change to improved or unimproved real estate, including, but not limited to, new construction or the enlargement of any exterior dimension of a building or other structure, and the installation of any type of site improvement, including offsite features, such as street median openings and clearing of vegetation, but not including bona fide agricultural activities. When used as a noun within this ordinance, the term "development" shall be construed to also include subdivisions, redevelopments, and land disturbing activities.

Easement. A grant by a property owner to the public, a corporation, or persons, of the use of designated land area for specific purposes, such as access of persons, utilities or services within which the owner of the property shall not erect any permanent structures.

Extraterritorial jurisdiction. The unincorporated area of a municipality that is contiguous to the corporate boundaries of the municipality and that is located within a given distance of those boundaries, as defined by the State of Texas, where the municipality may adopt rules governing plats and subdivisions of land.

Final Plat. The map of a subdivision or addition to be recorded as a certified subdivision after approval and installation of public improvements as applicable.

Improvement. Physical modifications which are installed or constructed by the subdivider/developer for the benefit of the lot owners and for the proper development of the land.

Lot. A platted parcel of land that is occupied or intended to be occupied by one main building, or a group of main buildings, and any accessory building(s) having principal frontage upon a public street or approved private street constructed to City of Anna minimum standards and including parking, landscaping, and open space as are required by this ordinance.

Phasing. The process of dividing a parcel of land into portions as shown on a preliminary plat or other plan whereby each portion can be completed prior to subsequent portions.

Development Services Director. The development services director or his/her designee.

Plat. The plan or map of a subdivision that is intended to be filed for record.

Preliminary. The preliminary drawing(s) of the existing conditions of a parcel and proposed development indicating the manner, phasing, or layout of the parcel of land into a subdivision to be submitted for approval, and prior to or simultaneously as the submission of a final plat document.

Private improvement. A privately owned improvement, structure, facility, or site feature constructed or installed as part of development and not accepted by the city or another governmental entity for operation or maintenance.

Public improvement. Any drainage way, stormwater management facility, roadway, alley, parkway, sidewalk, utility, pedestrian way, off-street parking area, lot improvement, open space, or other facility for which the city or other governmental entity will ultimately assume the responsibility for maintenance and operation as a condition precedent to the certification and filing of the plat.

Replat. Any change in a map of a recorded plat.

Subdivider/developer. A person, firm, corporation, partnership, association, or other entity who causes land to be divided into a subdivision for themselves or for others. The legal or beneficial owner(s) of any land included in a proposed development, the holder of an option or contract to purchase, or any other person or entity having enforceable proprietary interest in such land.

Subdivision. The division of any lot, tract, or parcel of land into two or more lots for the purpose, whether immediate or future, of offer, sale, or lease or for the purpose of development. Subdivision includes the division or development of land, whether by deed, metes and bounds description, devise, intestacy, lease, map, plat, or other recorded instrument. Subdivision also refers to the land so divided, as the context may indicate.

Tract. A tract of land is a general term and can define a platted lot of a few acres or square miles or a large identifiable area of land.

Division 2. Administration

9.02.041. Interpretation. These Subdivision Regulations are intended to establish the minimum requirements. If any other provision of law relates to any matter herein, the regulation providing the higher standard shall apply.

9.02.042. Platting Determination and Delegation. Upon request, the Development Services Director or designee shall determine whether a plat is required for the land and what type of plat application is required. The Development Services Director or designee is authorized to approve, or approve with conditions, plats of any type provided in this article. If the Development Services Director or designee determines that a plat cannot be approved or approved with conditions, the application shall be referred for consideration by the Planning and Zoning Commission and City Council as required by these regulations and applicable state law.

The Development Services Director shall determine whether an application is complete within ten (10) business days after submittal. After a complete application is filed, the Development Services Director or designee shall approve, approve with conditions, or refer the plat within thirty (30) days in accordance with these regulations and applicable state law.

If the Development Services Director or designee determines that approval or approval with conditions cannot be granted, the application shall be referred to the Planning and Zoning Commission for consideration and recommendation, and then to the City Council for final action at the next available meeting consistent with applicable notice, agenda, and statutory timing requirements.

For property located in the city's extraterritorial jurisdiction (ETJ), the Development Services Director or designee shall review the property to determine whether a plat is required. Based on that review, the Development Services Director or designee shall determine whether the application will proceed through the city's platting process under city requirements or be deferred to the county for plat processing. If the application is deferred to the county, the city shall provide a letter to the applicant and the county identifying the deferral of plat processing to the county.

Administrative officials.

(a) **Development Services Director.** The development services director or designee is responsible for taking the following actions with regard to a platting application under these regulations:
  (1) accepting an application for submittal, determining completeness, filing, and processing;
  (2) determining whether a plat is required and what type of plat application is required;
  (3) reviewing plat applications for compliance with these regulations, the City Design Standards Manual, adopted plans, and applicable law;
  (4) approving, approving with conditions, or referring plat applications as authorized by these regulations and applicable state law;
  (5) preparing staff reports and advising the Planning and Zoning Commission and City Council concerning plat applications requiring their consideration;
  (6) coordinating review with the City Engineer, other city departments, utility providers, and other reviewing agencies as necessary;
  (7) determining whether property located in the extraterritorial jurisdiction will proceed through the city's platting process or be deferred to the county for plat processing; and
  (8) initiating or coordinating enforcement actions concerning compliance with these regulations, approved plats, required public improvements, and conditions of approval;
  (9) promulgating additional or modified policies, standards, and administrative rules that apply to these regulations and applications.

(b) **City Engineer.** The City Engineer or designee is responsible for taking the following actions with regard to a platting application under these regulations:
  (1) reviewing and making recommendations regarding public improvements, engineering plans, construction plans, drainage, streets, utilities, and other infrastructure associated with platting;
  (2) determining whether proposed public improvements comply with these regulations, the City Design Standards Manual, approved construction plans, and applicable engineering standards;
  (3) coordinating with the development services director and other city departments concerning technical review comments and required revisions;
  (4) approving, approving with conditions, or disapproving construction plans and related engineering submittals as authorized by these regulations;
  (5) determining the acceptability of required public improvement assurances, inspection requirements, and completion or acceptance of public improvements; and

(c) **Planning and Zoning Commission.** The Planning and Zoning Commission shall have the powers and duties provided by these regulations, the City Code, the City Charter, and applicable provisions of the Texas Local Government Code. More specifically, the Planning and Zoning Commission shall:
  (1) review and make recommendations to the City Council on plat applications referred by the development services director or otherwise requiring commission consideration under these regulations;
  (2) approve, approve with conditions, disapprove with reasons, or recommend approval, approval with conditions, or disapproval with reasons of plat applications as authorized by these regulations and applicable state law;
  (3) review and make recommendations on amendments to these regulations and related subdivision or development standards when required by the City Code or directed by the City Council;
  (4) consider requests, reports, and recommendations from the development services director concerning platting and subdivision matters; and
  (5) make such determinations, decisions, or recommendations as may be required by these regulations or the City Code.

(d) **City Council.** The City Council shall have all powers and authority provided by the Texas Local Government Code, the City Charter, the City Code, and these regulations. More specifically, the City Council shall:
  (1) review and take final action on plat applications referred by the development services director, recommended by the Planning and Zoning Commission, or otherwise requiring City Council action under these regulations or applicable state law;
  (2) approve, approve with conditions, or disapprove with reasons plat applications within the time required by applicable state law;
  (3) accept or reject dedications of public rights-of-way, easements, public improvements, parkland, open space, or other public facilities when acceptance by the City Council is required;
  (4) authorize, approve, or accept development agreements, public improvement agreements, fiscal assurances, and other instruments related to subdivision development when required by these regulations or City policy;
  (5) amend, supplement, or repeal these regulations by ordinance after required review, recommendation, notice, and public hearing procedures; and
  (6) make such determinations, decisions, or recommendations as may be required by these regulations or the City Code.

9.02.043. Public Improvement Districts.

When a proposed subdivision includes public improvements, such as screening walls, recreation facilities, open space, flood management areas, landscaped entry features and/or medians, or other public amenities that primarily benefit the properties within the subdivision, the developer shall submit with the preliminary plat application, a petition for the creation of a public improvement district (PID) that meets the criteria outlined in the adopted PID policy of the City of Anna.

The PID petition shall include all properties within the subdivision and may include additional properties similarly benefited by the public improvements. The City Council may approve or deny or take any other lawful action related to a petition requesting the creation of a public improvement district. The City Council may deny any plat or development plan or application that proposes to designate, create, or construct public improvements such as screening walls, recreation facilities, open space, flood management areas, landscaped entry features and/or medians, or other public amenities that primarily benefit the properties within the subdivision, that are not included in a public improvement district. The purpose of allowing the use of PID is to create a higher quality development that exceeds the minimum regulations contained within the zoning regulations, design standards, and the regulations contained herein.

Any PID or PID assessment shall include funding to cover any administrative and legal cost incurred by the City related to the creation and general administration of the PID and include funding to pay for the perpetual maintenance of the public improvements.

9.02.044. Application Procedure

Prior to submission of applications for filing, a pre-application meeting (PAM) and formal application review meeting (FARM) are required, unless waived by the Development Services Director or designee. Both PAM and FARM meetings are conducted under the direction and authority of the Development Services Director, or his or her designee, who will invite appropriate staff to each meeting based on the unique circumstances of the specific project application. The pre-application meeting does not constitute the filing of a site plan, permit, plat, or development application of any type and do not create or establish vested rights as regulated by the Texas Local Government Code. Their purpose is to give applicants an opportunity to ask questions, identify issues early, and expedite the due diligence exploration and application checklist review processes, not to approve, commit to, or lock in

any plan. The Development Services Director may establish policies and procedures not inconsistent with these regulations including but not limited to flow charts, forms, applications, or checklists to accomplish the purposes outlined herein.

Division 3. Plat Types

9.02.061. Preliminary Plat

(a) **Preliminary plat application.** If, after a pre-application conference, a preliminary plat is required, the subdivider/developer may cause a surveyor and/or engineer to prepare the necessary application, preliminary drawings, fees, and supporting documentation for a preliminary plat submittal.
(b) A completed application form provided by the office of the Development Services Director, supporting documentation, fees, and electronic copy in a format acceptable to the Development Services Director of preliminary plat drawings shall be submitted to the Development Services Director for a completeness review, and subsequent filing. The completeness review will be completed within ten business days.
(c) Incomplete applications will be returned to the applicant, with a list of deficient items, and shall not be filed. If an application is resubmitted following a notice of incompleteness, it shall be subject to a completeness review prior to acceptance. The statutory timeline for city action on a plat shall not begin until the application is determined to be complete. An application that is not determined to be complete by the sixtieth (60th) day following initial submittal will be considered void.

Contents of preliminary plat drawings to be submitted.

The following information and conditions shall be included/required on all sheets or as part of the set of sheets:
(a) sheets drawn to legible scale as determined by the Development Services Director with a graphic and written scale on the face of the drawings;
(b) horizontal bearings and distances based on the State Plane Coordinate System, North American Datum 1983 (NAD 83), Texas North Central Zone 4202, and elevations referencing the North American Vertical Datum of 1988 (NAVD 88) unless they are referenced to a city benchmark on the same datum;
(c) a north arrow, a vicinity or general location map, and map symbol legend;
(d) a title block containing:
    (1) the description of the plat with:
        (A) the words *preliminary plat*;
        (B) previous subdivision information;
        (C) lot and block listing and, if applicable, phase number(s);
        (D) number of lots within the subdivision (if more than one), indicating separately the number of lots reserved for purposes other than development (e.g., open space, green space, centralized mail collection location, storm water detention);
        (E) name of the subdivision, which shall not duplicate or closely match an existing subdivision within Collin County, unless it is a continued phase of a previously filed plat; and
        (F) tract description, including total acreage of the subdivision (e.g., "A 31.31 acres tract being a portion of the Ralph Smith Survey, Abstract No. 4321, Collin County, Texas.");
    (2) the date the drawing was produced;
(e) the name, address, and phone number of the surveyor and/or engineer that produced the plat;
(f) the name, address, and phone number of the subdivider/developer of the property described in the plat; and
(g) a reference to any filed deed restrictions for the subdivision shall be shown on the plat by note.

Preliminary plat drawing sheet 1: Proposed subdivision.

The following information shall be included, on a single sheet of appropriate size acceptable to the Development Services Director, to describe the manner in which the tract is proposed to be subdivided and developed:
(a) lots, numbered within the block or entire development, and including the area of each lot;
(b) streets, showing the location, width, and names thereof, and showing the relationship of all streets to any projected streets shown on any development plan adopted by the city;
(c) location and width of proposed alleys, sidewalks, trails, and pedestrian ways;
(d) location and size in acres of proposed parks, playgrounds, centralized mail collection location, streetlights, school sites, or other special uses of land to be considered for dedication to public use, or to be reserved by deed or covenant for the use of all property owners in the subdivision, and any conditions of such dedication or reservation;
(e) location, width, beneficiary, and purpose of any easements;
(f) building setback lines with dimensions;
(g) the general utility plan of sewage collection, water supply, and storm water facilities, which may be provided on a separate sheet as necessary for legibility; and

(h) areas contributing drainage to the proposed subdivision, including the area, slope, and type of development in the contributing area, which may be provided on a separate sheet at appropriate scale as necessary for legibility.

Preliminary plat drawing sheet 2: Existing conditions.

The following information shall be included, on a single sheet of appropriate size acceptable to the Development Services Director, to describe the manner in which the tract exists currently:

(a) names and locations of adjacent subdivisions, lots, rights-of-way/streets, and tracts on or within 200 feet of the subject tract;
(b) all existing easements located on the subject tract;
(c) all existing stormwater facilities, wastewater facilities, water facilities, gas mains, communication cables and facilities, electric lines and facilities, culverts, and any other above ground or underground installations within or leading to the tract along with size, features, grades, and locations shown;
(d) permanent structures and other important features such as survey/abstract lines or jurisdictional lines, including city, county, extraterritorial, utility district, emergency services district, etc.;
(e) topographical information including contour lines on a basis of not more than two-foot intervals; and
(f) areas in the effective 100-year floodplain.

Preliminary plat supporting documents.

The following information shall be included with the preliminary plat application, and where practical included on the face of the plat document. Otherwise, separate statements and/or maps shall accompany the preliminary plat;

(a) a certificate, or other satisfactory evidence proving ownership of the entire tract to be platted;
(b) a certificate showing that all taxes and special assessments due and payable have been paid in full;
(c) proposed deed restrictions; and
(d) a statement of improvements that will be installed by the subdivider/developer and a timeline when such improvements will be completed. This statement shall be of sufficient detail to permit determination of whether such improvements will comply with these Subdivision Regulations, and other applicable statutes, ordinances, and regulations. The city may require the applicant to file a development agreement with each phase of the development.

Processing of preliminary plat application for submittal.

The Development Services Director shall accept the complete application with appropriate fees, shall coordinate required city staff and utility review. The Development Services Director and the City Engineer shall review the preliminary plat application as to its conformity with the comprehensive plan, master plans, major street plans, land use plan, and zoning district(s). The Development Services Director shall notify affected utility companies and agencies of the proposed plat and provide seven (7) calendar days for their comments or additional requirements to satisfy franchise agreements or intergovernmental agreements.

The Development Services Director shall maintain a complete file of the preliminary plat submittal with comments in a staff report listing recommended modifications, additions, or alterations of the proposed preliminary plat. Within thirty (30) days after an application for preliminary plat is formally submitted to the city and determined to be complete, the Development Services Director shall approve, approve with conditions, or refer such plat and submit the application to the Planning Commission for approval. In addition to modifications, additions, or alterations recommended by plan review staff the Development Services Director may attach such conditions to the approval of an application as are reasonably necessary to ensure compliance with this Subdivision Ordinance and the Comprehensive/General Plan and other adopted plans of the City of Anna.

Planning and Zoning Commission action on preliminary plat submittal.

Within thirty (30) days of the Planning and Zoning Commission being referred a plat from the Development Services Director with a recommendation shall approve, approve with conditions, or disapprove such plat. In addition to modifications, additions, or alterations recommended by the Development Services Director, the Planning and Zoning Commission may attach such conditions to the approval of an application as are reasonably necessary to ensure compliance with this Subdivision Ordinance and the Comprehensive/General Plan and other adopted plans of the City of Anna.

City Council action on preliminary plat submittal.

Within thirty (30) days following action by the Planning and Zoning Commission, the City Council shall approve, approve with conditions, or disapprove the plat as forwarded by the Planning and Zoning Commission.

Effect of approval of a preliminary plat.

Approval of a preliminary plat shall be deemed an expression of approval, subject to any required conditions, and authorizes the applicant to proceed with the preparation of a final plat and the preparation of detailed construction plans required for improvements and utilities. Approval of a preliminary plat shall not be construed as approval or acceptance of the subsequent final plat nor of any public improvements or dedications.

Expiration of preliminary plat.

Approval or conditional approval of a preliminary plat shall be effective for two years from the date the plat receives approval. A final plat must be applied for prior to the expiration of the approval of the preliminary plat. A final plat shall not be recorded until the final approved copy of the preliminary plat is on file with the city. If the plat has not been granted an extension by the Planning and Zoning Commission and City Council, the preliminary plat shall expire and shall be null and void two years from the date the plat received approval. The City Council may, upon the application of the subdivider/developer, extend the approval for up to an additional one (1) year if the plat has not expired.

9.02.062. Final Plat

(a) **Final plat application.** If, after a pre-application meeting, a preliminary plat is not required or a preliminary plat has been approved, the subdivider/developer shall cause a surveyor and/or engineer to prepare the necessary application, final drawings, fees, and supporting documentation for a final plat submittal.
(b) A completed application form provided by the office of the Development Services Director, supporting documentation, fees, and electronic copy in a format acceptable to the Development Services Director of final plat drawings shall be submitted to the Development Services Director for a completeness review, and subsequent filing. The completeness review will be completed within ten business days.
(c) Incomplete applications will be returned to the applicant, with a list of deficient items, and shall not be filed. If an application is resubmitted following a notice of incompleteness, it shall be subject to a completeness review prior to acceptance. The statutory timeline for city action on a plat shall not begin until the application is determined to be complete. An application that is not determined to be complete by the ($60^{th)}$ day following initial submittal will be considered void.
(d) A final plat application may be submitted simultaneously with a preliminary plat application.

Final plat submittal requirements.

The final plat shall include the following information on all sheets or as part of the set of sheets required. The final plat shall exclude any additional information not required by items below, including physical features on or affecting the land unless required by the Development Services Director. Approximate measurements are not acceptable.

(a) All information shall be drawn on 24-inch by 36-inch sheets, black and white drawing on bond paper in landscape view.
(b) All horizontal bearings and distances shall have as their basis the State Plane Coordinate System, North American Datum 1983 (NAD 83), Texas North Central Zone 4202. Elevations shall reference the North American Vertical Datum of 1988 (NAVD 88) unless they are referenced to a City benchmark on the same datum.
(c) Plat/Replat is clear and legible. Use a variety of line types and line weights. Do not screen information. Indicate plat/replat boundary/limits with heavy/bold line weight. Do not use grey-scale shading. Abandonments may be indicated by stipple or crosshatch shading.
(d) All sheets shall be drawn to scale, with a graphic and written scale on the face of the drawings. Unless otherwise approved by the Development Services Director for legibility or to minimize the total number of sheets, the preferred scale is 1-inch equals 100 feet (1" =100') and the scale shall not be smaller than 1-inch equals 200 feet (1"=200'). Approximate measurements are not acceptable. The title block shall be in the lower right-hand corner of the plat or replat and shall contain:
    (1) plat/replat type;
    (2) project name (subdivision name, lot, and block designations);
    (3) gross acreage;
    (4) city, county, and state name;
    (5) survey and abstract name; and
    (6) date of preparation.
(e) Title for replats shall reference subdivision name and recording information of the plat being revised.
(f) For nonresidential and multifamily developments, title states lot and block designations.

(g) For single-family and two-family residential development, title states number of residential lots developed at zoning district standards (e.g., SF-6.0, SF-8.4, MD, etc.) and number of common open space lots.
(h) Provide 1 1/2" x 5" blank area above title block for city approval stamps.
(i) Label company name, preparer name, address, and phone number of plat/replat preparer (e.g., surveyor, engineer, etc.) in the vicinity of the title block.
(j) Label company name, contact name, address, and phone number of current property owner in the vicinity of the title block.
(k) Orient plat/replat so that north is to the top or left-hand side of sheet.
(l) Provide north arrow, graphic scale, and written scale in close proximity to each other.
(m) Provide a vicinity map in the same orientation of plat/replat showing subject property, north arrow, scale (or labeled *not to scale*), and adjacent thoroughfares within a one-mile radius of site.
(n) Point of beginning tied to abstract corner if not previously platted or subdivision corner if platted. Indicate on graphic and/or legal descriptions.
(o) For property boundary lines, provide distances to nearest hundredth of feet and bearings to nearest second.
(p) For property boundary curves, provide curve lengths, curve radii, and chord lengths to nearest hundredth of feet, and internal angle and chord bearing to nearest second.
(q) If plat/replat uses abbreviations, provide legend.
(r) Label boundary monuments as to type and size and whether found or set for all property corners, points of intersection, and points of curvature/tangency. 5/8" diameter steel rods 24" long shall be set at all block corners, angle points, points of corners, and points of tangents.
(s) For properties contiguous to the site and for properties across right-of-way contiguous to the site, provide the following information within 50 feet of the site boundary and 50 feet of right-of-way contiguous to the site boundary:
    (1) Show and label properties. For platted properties, show lot lines and label subdivision name, lot and block designation, and plat record information for each lot. For unplatted properties, show parcel lines and label record owner and deed record information for each parcel.
    (2) Show all easements. Label as existing or proposed. If existing, provide recording information.
    (3) Show public street and alley right-of-way, Label as existing or proposed. Show the dimension of right-of-way width.
(t) Label street names.
(u) Provide legal description of the land including the following:
    (1) Provide the name of the record owner and corresponding deed reference.
    (2) Provide name of survey, abstract, county, and state.
    (3) Provide metes and bounds legal description for subdivision boundary. Calls and monumentation match plat/replat graphic.
    (4) Provide total area of the plat/replat in acres and square feet.
(v) Provide standard or a substantially similar as approved by the Development Services Director, City of Anna plat/replat language for the following:

    (1) Certificate of approval as prescribed by the City of Anna follows:

        CERTIFICATE OF APPROVAL
        APPROVED on this the _____day of _____, 20____, by the City of Anna, Texas.

        _____
        Planning & Zoning Commission Chair

        _____
        Director of Development Services or designee

    (2) Surveyor certificate language with signature block

        SURVEYOR'S CERTIFICATE
        That I, [INSERT NAME], of [COMPANY], do hereby certify that I prepared this plat and the field notes made a part thereof from an actual and accurate survey of the land and that the corner monuments shown thereon were properly placed under my persona; supervision, in accordance with the Subdivision Regulations of the City of Anna, Texas.
        Dated this the ___ day of _____, [YEAR].

        _____
        [NAME] [SEAL]

(3) Standard Plat Wording for Owner's Certificate, signature block for each owner, and notary block for each owner:

OWNERS CERTIFICATE

STATE OF TEXAS §
COUNTY OF COLLIN §

[METES & BOUNDS]

DEDICATION STATEMENT
NOW, THEREFORE, KNOW ALL MEN BY THESE PRESENTS:
THAT [INSERT OWNER(S) NAME(S)] _____ acting herein by and through its duly authorized officers, does hereby adopt this plat designating the hereinabove described property as [SUBDIVISION NAME, BLOCK(S), & LOT(S)] _____, an addition to the City of Anna, Texas, and does hereby dedicate, in fee simple, to the public use forever, the streets and alleys shown thereon. The streets and alleys are dedicated for street purposes. The easements and public use areas, as shown, are dedicated for public use forever, for the purposes indicated on this plat. No buildings, trees, shrubs, or other improvements or growth shall be constructed or placed upon, over, or across the easements as shown, except that landscape improvements may be placed in landscape easements, or fences placed within an easement if approved by the City of Anna. In addition, utility easements may also be used for the mutual use and accommodation of all public utilities desiring to use or using the same unless the easement limits the use to particular utilities, said use by public utilities being subordinate to the publics and City of Anna's use thereof. The City of Anna and public utility entities shall have the right to remove and keep removed all or parts of any fences, trees, shrubs, or other improvements or growths which may in any way endanger or interfere with the construction, maintenance, or efficiency of their respective systems in said easements. The City of Anna and public utility entities shall at all times have the full right of ingress and egress to or from their respective easements for the purpose of constructing, reconstructing, inspecting, patrolling, maintaining, reading meters, and adding to or removing all or parts of their respective systems without the necessity at any time of procuring permission from anyone.

Witness, my hand, _____, this the ___ day of _____, [YEAR].

_____
[NAME] [SEAL]

STATE OF TEXAS §
COUNTY OF COLLIN §
BEFORE ME, the undersigned authority, on this day personally appeared [OWNER NAME] _____, known to me to be the person whose name is subscribed to the foregoing instruments, and acknowledged to me that he executed the same for the purposes and consideration therein expressed.

GIVEN UNDER MY HAND AND SEAL OF OFFICE on this the ___ day of _____, [YEAR].

_____
NOTARY PUBLIC IN AND FOR THE STATE OF TEXAS [SEAL]

(4) Specific dedication language for access, hike & bike, and/or floodway and drainage easements.

i. Access Easement: the undersigned does covenant and agree that the access easement may be utilized by any person or the general public for ingress and egress to other real property, and for the purpose of general public vehicular and pedestrian use and access, and for Fire Department and emergency use, in, along, upon, and across said premises, with the right and privilege at all times of the City of Anna, its agents, employees, workmen, and representatives having ingress, egress, and regress in, along, upon, and across said premises.

ii. Hike and Bike Trail Easement: this plat is hereby adopted by the owners (called "Owners") and approved by the City of Anna (called "City") subject to the following conditions which shall be binding upon the Owners, their heirs, successor, and assigns: Lot _____, Block _____, as shown on the plat is called "Hike

and Bike Trail Easement". The Hike and Bike Trail Easement is hereby dedicated to the public's use forever, as indicated on this plat. No buildings, fences, trees, shrubs, or other improvements or growths shall be constructed or placed upon, over, or across the easements as shown. The City shall have the right to remove and keep removed all parts of any buildings, fences, trees, shrubs, or other improvements or growths which may endanger or interfere with the construction, maintenance, or efficiency of their respective trails in said easement. The City shall at all times have the full right of ingress and egress to or from their respective easements for the purpose of constructing, reconstructing, inspecting, patrolling, maintaining, reading meters, and adding to or removing all or parts of their respective trails without the necessity at any time of procuring permission from anyone.

iii. Drainage and Detention Easement:
DRAINAGE AND DETENTION EASEMENT
STATE OF TEXAS
COUNTY OF COLLIN
CITY OF ANNA
This plat is hereby adopted by the Owners and approved by the City of Anna (called "City") subject to the following conditions which shall be binding upon the Owners, their heirs, grantees and successors: The portion of Block 1, as shown on the plat is called "Drainage and Detention Easement." The Drainage and Detention Easement within the limits of this addition, will remain open at all times and will be maintained in a safe and sanitary condition by the owners of the lot or lots that are traversed by or adjacent to the Drainage and Detention Easement. The City will not be responsible for the maintenance and operation of said Easement or for any damage to private property or person that results from conditions in the Easement, or for the control of erosion. No obstruction to the natural flow of storm water run-off shall be permitted by construction of any type of building, fence, or any other structure within the Drainage and Detention Easement as hereinabove defined, unless approved by the City Engineer. Provided, however, it is understood that in the event it becomes necessary for the City to erect or consider erecting any type of drainage structure in order to improve the storm drainage that may be occasioned by the City shall have the right to enter upon the Drainage and Detention Easement at any point, or points, to investigate, survey or to erect, construct and maintain any drainage facility deemed necessary for drainage purposes. Each property owner shall keep the Drainage and Detention Easement clean and free of debris, silt, and any substance which would result in unsanitary conditions or obstruct the flow of water, and the City shall have the right of ingress and egress for the purpose of inspection and supervision of maintenance work by the property owner to alleviate any undesirable conditions which may occur. The natural drainage through the Drainage and Detention Easement is subject to storm water overflow and natural bank erosion to an extent which cannot be definitely defined. The City shall not be held liable for any damages of any nature resulting from the occurrence of these natural phenomena, or resulting from the failure of any structure, or structures, within the Easement.

iv. Collin County Health Department Certification for OSSF. If an On Site Sewage Facility (OSSF) is located on the property, provide specific plat notes and signature block verbiage as follows:
Health Department Certification:
I hereby certify that the on-site sewage facilities described on this plat conform to the applicable OSSF laws of the State of Texas, that site evaluations have been submitted representing the site conditions in the area in which on-site sewage facilities are planned to be used.

_____
Registered Sanitarian or Designated Representative
Collin County Development Services

Final plat supporting documents.

The following additional data shall be submitted with the final plat if requested by the Development Services Director:

(a) a certificate, or other satisfactory evidence proving ownership of the entire tract to be platted;
(b) a certificate showing that all taxes and special assessments due and payable have been paid in full;
(c) a copy of any deed restrictions applicable to the subdivision;
(d) a copy of homeowner's association or owner's agreement verifying ownership and maintenance responsibility for any open space tracts or other land owned in common and any storm water facilities, screening walls, or other private infrastructure; and

(e) a signed letter from the Anna Post Office stating that they accept the proposed location and placement of cluster box units when required for residential development.
(f) A development agreement may be required as a condition of final plat approval depending on the complexity of the project, dedications, financing, utility requirements, phasing, or other conditions.

Processing of final plat application for submittal.

(a) The Development Services Director shall accept the complete application with appropriate fees, shall coordinate required city staff and utility review.
(b) The Development Services Director and the City Engineer shall check the final plat application as to its conformity with the prior preliminary plat submittal and any conditions required. Note that at the discretion of the Development Services Director and City Engineer, the final plat submittal may vary by up to ten percent from the approved preliminary plat without requiring the resubmittal of a revised preliminary plat.
(c) If a preliminary plat was not required, the plat shall be reviewed for conformity with existing master plans, major street plans, land use plans, and zoning districts. The Development Services Director shall notify affected utility companies and agencies of the proposed plat and provide seven (7) calendar days for their comments or additional requirements to satisfy franchise agreements or intergovernmental agreements.
(d) The Development Services Director shall maintain a complete file of the final plat submittal with comments in a staff report listing recommended modifications, additions, or alterations of the proposed final plat. Within 30 days after an application for final plat is formally submitted to the city and determined to be complete by the Development Services Director, the Development Services Director or designee shall approve, approve with conditions, or refer such plat and submit the application to the Planning Commission for approval. In addition to modifications, additions, or alterations recommended by plan review staff, the Development Services Director may attach such conditions to the approval of an application as are reasonably necessary to ensure compliance with this Subdivision Ordinance, the Comprehensive/General Plan, and other adopted plans of the City of Anna.

Planning and Zoning Commission action on final plat submittal if required.

Within thirty (30) days the Planning and Zoning Commission being referred a plat from the Development Services Director with a recommendation shall approve, approve with conditions, or disapprove such plat. In addition to modifications, additions, or alterations recommended by the Development Services Director, the Planning and Zoning Commission may attach such conditions to the approval of an application as are reasonably necessary to ensure compliance with this Subdivision Ordinance and the Comprehensive/General Plan and other adopted plans of the City of Anna.

City Council action on final plat submittal if required.

Within thirty (30) days following action by the Planning and Zoning Commission, the City Council shall approve, approve with conditions, or disapprove the plat as forwarded by the Planning and Zoning Commission.

Effect of approval of a final plat.

Approval of a final plat shall be deemed an expression of approval, subject to any required conditions, of the final plat document as an acceptable form for recording in the public record. The approval of a plat is not considered an acceptance of any proposed dedication or improvement by the city.

(a) Approval or conditional approval of a final plat shall be effective for two years from the date the plat receives final approval. If the plat has not been certified and recorded within two years, nor granted an extension, the plat shall expire and shall be null and void.
(b) If no development has occurred which would affect the proposed plat, after two years of effective approval the City Council may, upon the application of the subdivider/developer, extend the approval for up to an additional two years.

Certification and recording of a final plat.

Following final plat approval, the subdivider/developer shall provide to the Development Services Director:

(a) original signature copy of the final plat on polyester film material suitable for filing;
(b) original tax certificate(s) from each taxing unit with jurisdiction of the real property indicating that no delinquent ad valorem taxes are owed on the real property. Note that certificates more than 30 days old may not be accepted for filing by the county clerk's office;

(c) if the final plat involves the dedication, installation, or modification of public improvements any combination of the following documents shall, in a form acceptable to the city attorney, be provided to the Development Services Director prior to certification.
  (1) official letters of acceptance and completion for any municipal public improvements;
  (2) surety in the form of a bond, deposit of cash, a letter of credit issued by a federally insured financial institution, or other acceptable financial guarantee in an amount determined by the city to be adequate to ensure the proper construction or installation of the public improvements remaining to service the subdivision;
  (3) an executed development agreement that has been filed with the city, if applicable;

(d) A certificate on the plat sealed by the surveyor confirming that all required markers and monuments have been set by the surveyor and are placed according to the standards provided herein; and

(e) for residential development, payment of all park fees and/or documentation of acceptance of park land or other dedication to meeting requirements outlined herein.

(f) The Development Services Director and the City Engineer shall ensure that all conditions of approval and required documentation have been satisfied prior to certification by the authority responsible for approval of the final plat.

(g) Upon certification of the final plat, the Development Services Director shall have the plat recorded with the county clerk's office.

9.02.063. Conveyance Plat

(a) If, after a pre-application conference, a conveyance plat is required, the subdivider/developer may cause a surveyor and/or engineer to prepare the necessary application, preliminary drawings, fees, and supporting documentation for a conveyance plat submittal.

(b) A completed application form provided by the office of the Development Services Director, supporting documentation, fees, and electronic copy in a format acceptable to the Development Services Director of conveyance plat drawings shall be submitted to the Development Services Director for a completeness review, and subsequent filing. The completeness review will be completed within ten business days.

(c) Incomplete applications will be returned to the applicant with a list of deficient items and shall not be filed. If an application is resubmitted following a notice of incompleteness, it shall be subject to a completeness review prior to acceptance. The statutory timeline for city action on a plat shall not begin until the application is determined to be complete.

(d) A conveyance plat may be used solely for the purpose of subdividing land and the recording of same, or recording a single existing lot or parcel created by other means. A conveyance plat may be used to convey the property or interests therein; however, a conveyance plat does not constitute approval for development of the property and is not intended for immediate development. A conveyance plat is an interim step in the subdivision and development of land.

(e) Conveyance plats may be used in lieu of a final plat to record the subdivision of property in the following instances:
  (1) To record the remainder of a tract larger than five (5) acres created by the final platting of a portion of the property provided that the remainder is not intended for immediate development.
  (2) To record the subdivision of property into parcels that are not intended for immediate development, where all public improvements exist prior to approval and minimum frontage requirements are met. All public rights-of-way must be dedicated, and all abutting streets and utilities must be installed and accepted by the city. Installation of onsite improvements may be deferred if development of other tracts is not affected and is approved by the City Engineer and Development Services Director.

Conveyance plat submittal requirements.

The conveyance plat shall include the following information on all sheets, or as part of the set of sheets required. The conveyance plat shall exclude any additional information (e.g., physical features of or on the land) not required by items (a) through (p) below:

Conveyance plat supporting documents.

The following additional data shall be submitted with the conveyance plat if requested by the Development Services Director:

(a) a certificate, or other satisfactory evidence proving ownership of the entire tract to be platted;

(b) a certificate showing that all taxes and special assessments due and payable have been paid in full;

(c) a copy of any deed restrictions applicable to the subdivision; and

(d) a development agreement may be required as a condition of final plat approval depending on the complexity of the project, dedications, financing, utility requirements, phasing, or other conditions.

Processing of conveyance plat application for submittal.

(a) The Development Services Director shall accept the complete application with appropriate fees, shall coordinate required city staff and utility review.
(b) The Development Services Director and the City Engineer shall check and review for conformity with existing master plans, major street plans, land use plans, and zoning districts. The Development Services Director shall notify affected utility companies and agencies of the proposed plat.
(c) The Development Services Director shall maintain a complete file of the conveyance plat submittal with comments in a staff report listing recommended modifications, additions, or alterations of the proposed conveyance plat. Within 30 days after an application for conveyance plat is formally submitted to the city and determined to be complete by the Development Services Director, the Development Services Director or his or her designee shall approve, approve with conditions, or refer such plat and submit the application to the Planning Commission for approval. In addition to modifications, additions, or alterations recommended by plan review staff the Development Services Director may attach such conditions to the approval of an application as are reasonably necessary to ensure compliance with this Subdivision Ordinance and the Comprehensive/General Plan and other adopted plans of the City of Anna.

Planning and Zoning Commission action on Conveyance Plat submittal if required.

Within 30 days the Planning and Zoning Commission being referred a plat from the Development Services Director with a recommendation shall approve, approve with conditions, or disapprove such plat. In addition to modifications, additions, or alterations recommended by the Development Services Director, the Planning and Zoning Commission may attach such conditions to the approval of an application as are reasonably necessary to ensure compliance with this Subdivision Ordinance and the Comprehensive/General Plan and other adopted plans of the City of Anna.

City Council action on Conveyance Plat submittal if required.

Within thirty (30) days following action by the Planning and Zoning Commission, the City Council shall approve, approve with conditions, or disapprove the plat as forwarded by the Planning and Zoning Commission.

Effect of approval of a Conveyance Plat.

Approval of a conveyance plat shall be deemed an expression of approval, subject to any required conditions, of the conveyance plat document as an acceptable form for recording in the public record. The approval of a conveyance plat is not considered an acceptance of any proposed dedication or improvement by the city.

(a) Approval or conditional approval of a conveyance plat shall be effective for two years from the date the plat receives final approval. If the plat has not been certified and recorded within two years, nor granted an extension, the plat shall expire and shall be null and void.
(b) If no development has occurred which would affect the proposed plat, after two years of effective approval the City Council may, upon the application of the subdivider/developer, extend the approval for up to an additional two years.

Certification and recording of a conveyance plat.

Following conveyance plat approval, the subdivider/developer shall provide to the Development Services Director:

Standard Plat Note - All conveyance plats must include the following wording:

A conveyance plat is a record of property approved by the city for the purpose of sale or conveyance in its entirety or interests thereon defined. No building permit shall be issued, nor permanent public utility service provided until a final plat is approved, filed of record, and public improvements accepted in accordance with the provisions of the Subdivision Ordinance of the City of Anna. Selling a portion of this property by metes and bounds, except as shown on an approved, filed, and accepted conveyance plat, final plat, or replat is a violation of the city ordinance and State law.

(a) Original signature copy of the conveyance plat on paper suitable for filing.
(b) Original tax certificate(s) from each taxing unit with jurisdiction of the real property indicating that no delinquent ad valorem taxes are owed on the real property. Note that certificates more than 30 days old may not be accepted for filing by the county clerk's office.
(c) A letter sealed by the surveyor confirming that all required markers and monuments have been set by the surveyor and are placed according to the standards provided in the City of Anna Design Standards.

(d) The Development Services Director and the City Engineer shall ensure that all conditions of approval and required documentation have been satisfied prior to certification by the authority responsible for approval of the conveyance plat.
(e) Upon certification of the conveyance plat the Development Services Director shall have the plat recorded with the county clerk's office.

No building permits shall be issued nor permanent utility service provided for land which has only received approval as a conveyance plat.

A conveyance plat may be superseded by a preliminary plat or final plat in total or in part through compliance with the procedures and requirements of these regulations.

Division 4. Subdivision Design Standards

9.02.080. Monuments.

(a) Block Corner Monuments

Monuments consisting of 5/8" diameter steel rods 24" long and set flush with the top of the ground shall be placed at all corners of block lines, the point of intersection of alley and block lines, and at points of intersections of curves and tangents of the subdivision. Each block corner monument shall be marked in a way that is traceable to the responsible RPLS or associated employer.

(b) Lot Corner Monuments

Lot corner monuments shall be placed at all lot corners (except corners which are also block corners), consisting of iron rods or pipes of a diameter of not less than 5/8 inch and 24 inches in length, and set flush with the top of the ground.

(c) Curve Point Markers

In addition, curve point markers shall be established of the same specifications as lot corners.

(d) View Between Monuments Obstructed

Where, due to topographic conditions, permanent structures, or other conditions, the view is obstructed between any two adjacent monuments, intermediate monuments shall be so set as to assure a clear view between adjacent monuments.

(e) Installed Prior to Acceptance and Filing

All required block, lot, and curve monuments shall be installed prior to the final acceptance of the subdivision by the city and prior to filing the plat at the county.

(f) Precision and Error of Closure

All survey work around the boundary area, as well as within the subdivision, [shall] satisfy the following precision requirements and otherwise comply with Texas Admin. Code, Title 22, Chapter 138, Subchapter E, as applicable:

(1) The actual relative location of corner monuments found or set within the corporate limits of the city shall be reported within a positional tolerance of 1:10,000 + 0.10 feet.

(2) The actual relative location of corner monuments found or set within the extraterritorial jurisdiction of the city shall be reported within a positional tolerance of 1:7,500 + 0.10 feet.

(3) The actual relative location of corner monuments found or set in all rural areas outside the corporate limits and extraterritorial jurisdiction of the city shall be reported within a positional tolerance of 1:5,000 + 0.10 feet.

(4) Areas, if reported, shall be produced, recited, and/or shown only to the least significant number compatible with the precision of closure.

(5) Survey measurement shall be made with equipment and methods of practice capable of attaining the tolerances specified by these standards.

(6) Positional tolerance of any monument is the distance that any monument may be mislocated in relation to any other monument cited in the survey.

(g) Subdivisions Containing 5 Acres or More

A subdivision containing five acres or more shall have at least two monuments set by the RPLS, if not already existing, for two corners of the subdivision, and such monuments shall be located at opposite ends (or at widely separated corners) of the subdivision and clearly shown on the final plat prior to filing at the county. The final plat shall also show clear ties to existing monuments in the vicinity of the subdivision.

9.02.081. Lots and Blocks.

Proposed lots and blocks within a subdivision shall comply with the following requirements:

(a) **Zoning district requirements.** Lots located within the City's corporate limits shall comply with the minimum requirements of the applicable zoning district. In all residential zoning districts with lots smaller than 75 feet in width, all corner lots shall be at least 15 feet wider than the minimum lot width required by the applicable zoning district.

(b) **Irregularly shaped lots.** Irregularly shaped lots shall have sufficient width at the building line to satisfy the lot width and frontage requirements of the applicable zoning district. Each irregularly shaped lot shall also provide a reasonable building pad without encroaching into required setbacks or easements. Triangular, severely elongated or tapered, flag, and panhandle lots shall be avoided. The Development Services Director may recommend disapproval, and the Planning and Zoning Commission and City Council may disapprove, any lot that is inconsistent with the purpose of lot configuration, lot width, zoning district, or other applicable development standards. The same disapproval authority applies to any lot that is so unusually shaped as to adversely affect existing or future development patterns, prospective lot layout, or surrounding properties.

(c) **Double frontage lots.** Double frontage lots shall be avoided except where necessary to separate residential development from arterial or collector streets or to address a specific disadvantage caused by topography or other site conditions.

(d) **Reserve strips.** Reserve strips controlling access to streets, alleys, or adjoining property are prohibited unless required by the City Engineer and Development Services Director in the public interest.

(e) **Residential collector frontage.** To the greatest extent practicable, the number of lots fronting residential collector streets shall be minimized to promote traffic safety and operational efficiency.

(f) **Block lengths.** Each residential block shall contain not fewer than four and not more than twenty-one (21) buildable residential lots.

9.02.082. Streets, Alleys, and Sidewalks.

The arrangement, character, extent, width, grade, lighting, signage, screening where applicable, location, and construction of all streets, alleys, sidewalks, trails, and pathways shall conform to the City of Anna's Thoroughfare Plan, Comprehensive Plan, Parks and Trails Plan where applicable, and Design Standards. Where a subdivision or any lot therein abuts a state or county highway, road, or right-of-way, additional standards or review may apply. Subdivisions shall be supported by a transportation network having adequate capacity, ingress and egress, emergency access, pedestrian connectivity, and safe and efficient circulation. The subdivider or developer shall be responsible for the cost of rights-of-way, easements, and improvements necessary to serve the development, subject to the City's cost participation policies on oversized facilities.

The City Engineer and Development Services Director may recommend disapproval of any street, alley, sidewalk, trail, pathway, driveway, or access layout that does not provide safe and efficient circulation in accordance with all applicable plans, design standards, and the following requirements:

(a) For single-family developments, a minimum of two public access points to a public street are required. Developments with 50 or fewer lots may be approved by the City Engineer and Development Services Director with a single public access point when the single access point complies with applicable fire design standards. Required access points shall be separated by a distance of not less than one-half of the maximum overall diagonal dimension of the property or area served as determined by the Development Services Director or designee. For phased subdivisions, the area served means each final plat.
(b) Local and residential collector streets shall be arranged to discourage unnecessary through traffic while maintaining reasonable connectivity to adjacent subdivisions and future development.
(c) Where a subdivision abuts or contains an existing or proposed arterial street, the City Engineer and Development Services Director may require access management, reverse frontage, screening, buffering, marginal access streets, or other treatment necessary to protect residential properties and separate local traffic from through traffic.
(d) At least 50 percent of the total centerline length of all streets within a residential subdivision shall be curvilinear in design, unless otherwise approved by the City Engineer and Development Services Director.
(e) A cul-de-sac street shall not exceed 600 feet in length except as approved by the City Engineer and Development Services Director.
(f) Intersecting undivided streets with centerline offsets of less than 150 feet shall be avoided.
(g) Streets intersecting an existing or future divided roadway shall be configured to accommodate the appropriate median opening and left-turn lanes, including required transition and stacking distances, and shall align with existing or proposed streets or driveways on the opposite side of the divided roadway where necessary to share the median opening.
(h) Street intersections shall be designed to 90 degrees and shall comply with the City's Design Standards for intersection angle, tangent length, and spacing except as approved by the City Engineer and Development Services Director.
(i) Street and alley stubs shall be provided where necessary to extend the transportation network to adjacent property as approved by the City Engineer and Development Services Director. Temporary dead-end streets or alleys shall include required turnarounds, easements, signage, and plat notations as required by the City Engineer and Development Services Director.
(j) Reserve or residual strips that control access to streets, alleys, or adjoining property are prohibited unless required by the City in the public interest.
(k) Private streets may be permitted only when designed, constructed, maintained, and designed in accordance with City standards. The City shall not be responsible for construction or maintenance costs for private streets, and any restricted access shall provide reliable access for emergency services, City services, utilities, and other public service providers.
(l) Private streets shall be designed in a manner that the centerline of the road will also be the property line of the adjacent adjoining lots as required by the City Engineer and Development Services Director.
(m) Driveways, shared access, cross access, and related easements shall comply with the City's Design Standards and may be required to reduce driveway conflicts, preserve street capacity, and provide safe access. Driveways on TxDOT facilities shall also comply with applicable TxDOT requirements unless City standards are more restrictive.
(n) Alleys, provided, shall comply with the City's Design Standards for right-of-way, pavement width, length, turnouts, intersections, and access. Alleys shall be designed to provide safe and efficient access for residents, service vehicles, waste collection, and emergency vehicles.
(o) Sidewalks, trails, and pathways shall be provided along streets and through developments as required by the City's comprehensive plans and Design Standards. Required pedestrian facilities shall be constructed or financially secured before acceptance of the subdivision or issuance of certificates of occupancy, as applicable.
(p) For perimeter and approach streets, the developer shall dedicate required right-of-way and construct or improve the portion of the roadway necessary to serve the subdivision and maintain consistency with the City's Thoroughfare Plan and Design Standards. The timing, extent, reimbursement, escrow, or adjustment of such improvements shall be determined in accordance with applicable City policies and state law.

9.02.083. Rights-of-Way

Right-of-way shall be dedicated in order to provide for streets, sidewalks, pathways, trails, and other required public facilities and shall be configured in accordance with the following standards:

(a) The right-of-way for a City of Anna street shall be a minimum of 50 feet and a maximum of 140 feet. The right-of-way for an alley shall be a minimum of 16 feet or as otherwise determined by the City Engineer and Development Services Director.
(b) Minimum right-of-way shall be determined based upon the street classification. Classification of a street shall be determined by reference to the Comprehensive/General plan and the Thoroughfare Plan; or, if the classification is not designated on any such document, the City Engineer and Development Services Director shall determine the street classification by reference to existing or planned land uses of abutting properties and the Comprehensive/General Plan, the Thoroughfare Plan, and, when required, the traffic impact analysis.

(c) Right-of-way dedication for perimeter streets shall be equal to one-half of the total right-of-way requirements established for such street classification. In some instances, more than half of the required width shall be required when a half street is impractical or unsafe and depending upon the actual or proposed alignment of the street, such as in the case of a curved street, as may be required by the City Engineer and Development Services Director.
(d) Where the property lies on both sides of the proposed public street or existing street, the right-of-way dedication shall be equal to the amount set forth in the aforementioned documents or as determined by the City Engineer and Development Services Director.

9.02.084. Easements

For new development, all necessary onsite easements shall be established on the subdivision plat and not by separate instrument, and they shall be labeled for the specific purpose, and to the specific entity if other than the city, for which they are being provided.

All easements required for the installation and maintenance of utility facilities, drainage, vehicle or pedestrian access, screening wall maintenance, slopes adjacent to right-of-way, or as otherwise needed to serve the development shall be no less than the minimum width provided in the City of Anna Design Standards and are subject to approval by the City Engineer.

Typically, a minimum ten-foot wide (or as otherwise approved by the City Engineer) utility easement shall be provided along the front of all lots in a residential subdivision, adjacent to and flush with the street right-of-way line for the potential placement of utility facilities. Alleys may be provided as an alternative to this requirement.

Where development or construction will require easements and/or right-of-way dedications outside the subdivision plat boundaries, no approval of construction plans for developments will be granted until verification of the recording of all easements and right-of-way dedications has been received unless otherwise approved by the City Engineer.

9.02.085. Water and Wastewater Facilities

(a) Subdivisions within the city and its extraterritorial jurisdiction shall be provided with an approved water supply and distribution system, and with an approved sewage collection and disposal system.
(b) If a subdivision is located within the city's extraterritorial jurisdiction and desires to be served by the city's water and/or wastewater services, such requests shall be considered in accordance with the city's water and wastewater service policy.
(c) The design and construction of all water and wastewater facilities shall conform to the City of Anna Design Standards and state and federal requirements. The subdivider/developer shall be responsible for the costs of easements and water and wastewater improvements to serve the development, subject to the city's cost participation policies on oversized facilities.

9.02.086. Storm Water Collector and Conveyance Systems

The design and construction of all storm water facilities shall conform to the City of Anna Design Standards and state and federal requirements. The subdivider/developer shall be responsible for the costs of easements and storm water improvements to serve the development, subject to the city's cost participation policies on oversized facilities.

9.02.087. Parks and Open Space

The requirements contained in this section are intended for the purpose of assuring open space and community park facilities are available and adequate to meet the needs created by such development while maintaining current and proposed park and recreation standards pursuant to the current Anna Parks, Trails and Open Space Master Plan.

It is the policy of the city that a park fee is hereby imposed on residential development, and all fees collected shall be used solely and exclusively for the purpose of acquisition and development of new community parks and existing park facilities intended for access and use by the community.

It is also the policy of the city to allow any acceptable park land, parks, or recreational facilities that meet the criteria as outlined by these regulations to be applied as credit towards the total imposed park fee.

(a) *Total park fee.* A park fee shall be imposed on all residential development in the city and the ETJ.

Calculation of total park fee

The total park fee is calculated by adding together the park land fee and park development fee and then multiplied by the total number of dwelling units. Any approved credits applied (up to 50 percent) will then be subtracted from the total park fee amount.

(b) *Park land fee.* (Cash in lieu of dedicated land). The park land fee is established for the procurement of future land and areas to be developed for recreational use by the citizens of the city and ETJ.

Calculation of park land fee
(Ref. adopted Fee Schedule for current fee amounts)

Using assumed value of one acre at $80,000.00 (capped at current amount but may be revised every year by the city as necessary) and one acre of park land per 138 people (based on 256 acres of neighborhood and community parks in Anna, and estimated population of 35,400 people. Assumed PPH (persons per household) is 3 for single-family and 2.55 for multifamily.

(1) Single family: 138 people divided by 3 PPH = 46 = 1 acre of park land per 46 dwelling units; Set value of 1 Acre divided by 46 = $1736 per dwelling unit
(2) Multifamily: 138 people divided by 2.55 PPH = 54 = 1 acre of park land per 54 dwelling units; Set value of 1 Acre divided by 54 = $1476 per dwelling unit

(c) *Park development fee.* The park development fee is established for the development and maintenance of parks, land, and recreational facilities designated for use by the citizens of the city and ETJ.

Calculation of park development fee (Ref. adopted Fee Schedule for current fee amounts)

The average park in Anna serves approximately 2,725 people based on an estimated population of 35,400 people. A typical neighborhood park costs an average of $2,250,000.00, for an estimated cost of $825.00 per person.

(1) Single family: $825.00 x 3 PPH = $2475 per dwelling unit
(2) Multifamily: $825.00 x 2.55 PPH = $2104 per dwelling unit

(d) *Subdivider/developer contributions by land dedication.*

(1) In lieu of the park land fee, the subdivider/developer of any area zoned and to be used for single-family, duplex, or multi-family residential purposes within the city may elect to apply a contribution of dedication of community park land acceptable to the city at the rate of not less than one acre of land per 49 single family units or 60 multifamily units of such residential subdivision.
(2) The subdivider/developer shall propose dedication of park land in conjunction with approval of the preliminary plat. Dedicated area shall be shown on the final plat as "Park land dedicated to the City of Anna."
(3) The dedicated land required hereby shall be well drained, relatively level in areas that are proposed for active park uses, accessible to public streets, and suitable for appropriate recreational and leisure activities as defined in a community park. All park land offered for dedication under this section shall meet the requirements for location and for physical land characteristics outlined in the current Anna Parks, Trails, and Open Space Master Plan. Areas having environmentally sensitive ecosystems, attractive views, topographical interests, or unique natural features shall be preferred and encouraged for park land dedication. Areas which have been stripped or are relatively featureless, barren of natural trees and vegetative cover, and which are not physically attractive in some other way, are not typically acceptable. Additionally, dedicated park lands should typically not be within the 100-year floodplain of unusual topography or have a slope greater than three percent unless approved by the Community Services Director of the City of Anna.
(4) The location and size of public parks within the city shall be determined in all instances by the Parks and Recreation Director of the City of Anna. That determination shall be based upon existing circumstances at the time and shall be in accordance with the current Anna Park and Recreation Open Space Master Plan adopted by the City.
(5) Park land shall be easily accessible to the public, enhance the visual character of the city, and minimize conflict with adjacent land uses.
(6) *Processing and collection of park fees.*

(1) Park fee payment.

(A) The subdivider/developer has the duty to submit with the preliminary plat the information concerning the number of dwelling units and on each subsequent final plat.
(B) The city shall calculate the amount of the applicable park fee due with each final plat application, rounding the amount to the nearest whole dollar.
(C) The applicable park fee shall be collected prior to certification and filing of the final plat.

(2) Credit against park fee for subdivider/developer contributions to park land and recreation land or facilities.

(A) Park land, privately owned park, or recreation facility dedication in lieu of park fee shall be reviewed by the parks and recreation director and is subject to approval by the City Council of the City of Anna.
(B) In lieu of dedicated land and/ or park fees up to 50 percent of the total park dedication requirement may be fulfilled by privately owned and maintained park and recreation facilities that are designed, constructed and installed meeting the same minimum standards for quality used in city owned and developed parks. In determining the amount of credit, the following criteria shall be used:
- Exceeding open space requirement of a development agreement or zoning district by more than 25 percent: ten percent credit.
- Providing swimming pool(s): ten percent credit.
- Providing playgrounds: ten percent credit.
- Providing volleyball, basketball, pickleball, and/or tennis courts: ten percent credit.
- Providing walking, bike, or jogging trails: ten percent credit.

(C) Where review of development applications has resulted in the acceptance of land dedication, such land dedication shall be shown on a final plat and shall contain clear fee simple dedication of that land to the city. Credit shall be granted upon approval of the final plat by the city council.

(3) Use of park fees.

(A) A special fund known as the park development fund will be established for the deposit of all fees under this ordinance.
(B) Fees collected shall be used for the purpose of acquisition and development of new community parks and existing park facilities intended for use and access by the entire city. Fees collected may be used for site preparation, the extension of utilities to or within sites, the installation of landscaping, play equipment, or recreation improvements and attendant engineering and planning costs associated with such park development.
(C) All expenditures of fees collected shall be made in accordance with the current Anna Parks, Trails, and Open Space Master Plan and approved by the city council to best benefit the citizens of Anna.
(D) Any monies paid into this park development fund must be expended by the City of Anna within ten years following final plat approval. If such funds are not expended within ten years following final plat approval, the payor shall be entitled to a refund of such funds upon written request, less any amounts expended for such purposes.

9.02.088. Street Lighting

(a) The city requires street lighting to improve the safety and usability of all streets. This section applies to all public or private streets, and streets identified in the City of Anna Thoroughfare Plan including but not limited to arterial, collectors, local street types, trails, alleys, and pathways. The minimum standards regarding the design and installation of street lighting will be required for any plat that requires the installation, improvement or widening of any street. Street lighting will be required at all intersections, in cul-de-sacs, street curves, median breaks, traffic calming devices and in other locations determined by the Development Services Director and City Engineer. All specifications not included in these regulations are subject to all requirements of the City of Anna Design Standards
(b) Residential Collector, local, alley, trail, or pathway: Maximum spacing is 150 lineal feet, staggered on both sides of each street. Alley, trail, and pathways may be considered on one side as determined by the Development Services Director and City Engineer. Maximum height shall be less than 23 feet measured from adjacent grade unless otherwise approved by the City Engineer and Development Services Director.
(c) All arterial, commercial/industrial collectors and local streets: Maximum spacing is 150 lineal feet, staggered on both sides of each street or centered in the median as determined and approved by the Development Services Director or City

Engineer. Alley, trail, and pathways may be considered on one side as determined by the Development Services Director and City Engineer. Maximum height shall be less than 30 feet measured from adjacent grade unless otherwise approved by the City Engineer and Development Services Director.

9.02.089. Construction Procedures

A site development permit is required from the city prior to beginning any site development-related work in the city or its extraterritorial jurisdiction that affects erosion control, storm drainage, vegetation or tree removal, or a floodplain.

(a) *Preconstruction conference.* Prior to scheduling the preconstruction conference, the engineering plans must be approved, and an inspection fee must be submitted. The city shall require that all contractors participating in the construction meet for a preconstruction conference to discuss the project prior to release of a grading permit and before any filling, excavation, clearing or removal of vegetation and any protected trees that are larger than six-inch caliper. All contractors shall be familiar with, and shall conform with, applicable provisions of the City's landscape and tree preservation regulations and any other applicable ordinances or regulations.

(b) *Conditions prior to authorization.* Prior to authorizing release of a site development permit, the city engineer shall be satisfied that the following conditions have been met:

(1) The final plat has been approved by the city (and any conditions of such approval have been satisfied);

(2) All required engineering documents are completed and approved by the city engineer;

(3) All necessary offsite easements and dedications required for City-maintained facilities and not shown on the plat must be conveyed solely to the city, such as by filing of a separate instrument, with the proper signatures affixed. The original of the documents and the appropriate fees for filing the documents at the county (per Collin County requirements and the city's submission guidelines, as may be amended from time to time) shall be returned to the city secretary prior to approval and release of the engineering plans by the city engineer;

(4) All contractors participating in the construction shall be presented with a set of approved plans bearing the stamp of release of the city engineer, as appropriate, and at least one set of these plans shall remain on the job site at all times;

(5) A complete list of the contractors, their representatives on the site, and telephone numbers where a responsible party may be reached at all times must be submitted to the city; and

(6) All applicable fees must be paid to the city.

(c) *Nonpoint source pollution controls and tree protection.* All nonpoint source pollution controls, erosion controls, and tree protection measures and devices shall be in place, to the city engineer's satisfaction, prior to commencement of construction on any property.

9.02.090. Inspection Procedures

The subdivider shall provide inspection service through his/her engineer to ensure that construction is being accomplished in accordance with the plans and specifications approved by the City Engineer.

(a) The subdivider shall notify the city engineer 48 hours prior to commencement of construction. This notice shall give the location and date of the start of construction.
(b) The City shall have the right to inspect any construction work being performed to ensure that it is proceeding in accordance with the intent of the provisions of these subdivision regulations.
(c) Any change in design that is required during construction should be made by the licensed professional engineer whose seal and signature are shown on the plans. Another engineer may make revisions to the original engineering plans if so authorized by the owner of the plans, and if those revisions are noted on the plans or documents. All revisions shall be approved by the City Engineer.
(d) If the City Engineer finds, upon inspection, that any of the required public improvements have not been constructed in accordance with the approved construction plans, the City's standards and/or the design standards, then the developer shall be responsible for completing and correcting the deficiencies (at his/her expense) such that they are brought into conformance with the applicable standards.
(e) Testing laboratory services will be arranged by the city and paid for by the developer. It shall be the responsibility of city engineer (or designee) to coordinate the scheduling of all required tests with the testing laboratory. Testing shall be

conducted in accordance with the procedures set forth in design standards for like work at the frequency specified thereon as directed by the City Engineer.

Letter of Satisfactory Completion

(a) The City will only deem required public improvements satisfactorily completed when the applicant's engineer or RPLS has certified to the City Engineer (through submission of detailed sealed "as-built," or record, drawings of the property) drawings that indicate all public improvements and their locations, dimensions, materials and other information required by the City Engineer, and when all required public improvements have been completed.
(b) The "as-builts" shall also include a complete set of sealed record drawings of the paving, drainage, water, sanitary sewer and other public improvements, showing that the layout of the lines and grades of all public improvements are in accordance with engineering plans for the plat, and showing all changes made in the plans during construction, and containing on each sheet an "as-built" stamp bearing the signature and seal of the licensed professional engineer and the date.
(c) One reproducible drawing of the utility plan sheets containing the as-built information shall also be submitted.
(d) The developer's engineer and/or RPLS shall also furnish the City with a copy of the approved final plat and "as-built" engineering plans, in such a digital format (on disk) that is compatible with the City CAD system.
(e) When the requirements of the above have been met to the Development Services Director and City Engineer's satisfaction, and when all bonds have been received and approved as required herein, the City Engineer shall issue a letter of satisfactory completion.

Effect of Acceptance

(a) Acceptance of the development shall mean that the developer has transferred all rights to all the public improvements to the City for use and maintenance, subject to the required bonds or methods included herein.

9.02.091. Issuance of Building Permits

A building permit shall only be issued for a lot, building site, building or use after the lot or building site has been officially recorded by a final plat approved by the Commission and filed for record at Collin County, and after all public improvements, as required by these subdivision regulations, have been completed.

Notwithstanding the above, the Development Services Director may release some residential building permits for not more than 10% of the lots within a new residential subdivision, provided that all public improvements have been completed for that portion of the development to a minimum acceptable standard of the City Engineer and Development Services Director. An expedited plat fee is established by the City to be paid by the developer and shall be paid prior to the release of any building permits referenced herein. No certificate of occupancy or lot may be sold, nor title conveyed until the final plat has been recorded with the Collin County clerk. The expedited building permit may be issued as follows:

(a) A agreement providing sufficient security is approved by the City Engineer and Development Services Director for the completion of all remaining public improvements, and a expedited plat fee be paid by the developer.

Division 5. Requirements for Acceptance of Subdivisions by City

9.02.110. Acceptance of Improvements

The city hereby defines its policy to be that the city will withhold all city services and improvements of whatsoever nature, including the maintenance of streets and the furnishing of all other city services from any subdivision or property until all of the street, utility, storm drainage and other public improvements, as well as lot improvements such as retaining walls and grading and installation of improvements required for proper lot drainage and prevention of soil erosion on the individual residential lots, are properly constructed according to the approved engineering plans and to city design standards, and until such public improvements are dedicated to and accepted by the city.

9.02.111. Developer Guarantee of Public Improvements.

Developer's guarantee: Before final acceptance of a subdivision located all or partially within the city or its extraterritorial jurisdiction, the city must be satisfied that all required public improvements have been constructed in accordance with the approved engineering plans and with the requirements of these regulations unless otherwise specified within a development agreement.

(a) Development agreements and guarantee: The development agreement shall contain such terms and conditions to ensure the development of the plat as agreed upon by both the subdivider/developer and the city.
(b) Whenever the city permits an applicant to enter into a development agreement, it shall require the applicant to provide sufficient financial security, covering the completion of the public improvements. The security shall be in the form of cash escrow or, where authorized by the city, a performance bond or letter of credit or other security acceptable to the city council and the city attorney, as security for the promises contained in the improvement agreement.
(c) Development agreement required for oversize reimbursement. The city shall require a development agreement pertaining to any public improvement for which the subdivider/developer shall request reimbursement from the city for oversizing costs on a case-by-case basis. The city manager (or designee) is authorized to sign an improvement agreement on behalf of the city. The improvement agreement shall contain such other terms and conditions as are agreed to by the subdivider/developer and the city.
(d) Financial security shall be in an amount equal to 110 percent of the estimated cost of completion of the required public improvements and lot improvements. The issuer of any surety bond and letter of credit shall be subject to the approval of the city manager and the city attorney.
(e) Performance bonds. The performance bond shall comply with the following requirements:
    (1) All performance bonds must be in the forms acceptable to the city manager and the city attorney.
    (2) All performance bonds must be executed by such sureties as are named in the current list of "Companies Holding Certificates of Authority as Acceptable Sureties on Federal Bonds and as Acceptable Reinsuring Companies", as published in Circular 570, as may be amended, by the Financial Management Service, Surety Bond Branch, U.S. Department of the Treasury.
    (3) All performance bonds must be signed by an agent and must be accompanied by a certified copy of the authority for him or her to act.
    (4) All performance bonds shall be obtained from surety or insurance companies that are duly licensed or authorized in the State of Texas to issue performance bonds for the limits and coverage required.

    If the surety on any performance bond furnished by the applicant is declared bankrupt, or becomes insolvent, or its right to do business in terminated in the State of Texas, or the surety ceases to meet the requirements listed in Circular 570, the subdivider/developer shall, within 20 calendar days thereafter, substitute another performance bond and surety, both of which must be acceptable to the city.
(f) Letter of credit. If the city council authorizes the applicant to post a letter of credit as security for its promises contained in the improvement agreement, the letter of credit shall:
    (1) Be irrevocable;
    (2) Be for a term sufficient to cover the completion, maintenance, and warranty periods, but in no event less than two years; and
    (3) Require only that the city present the issuer with a sight draft and a certificate signed by an authorized representative of the city certifying to the city's right to draw funds under the letter of credit.
(g) If the city manager is satisfied that such portion of the improvements has been completed in accordance with city standards, he or she may, but is not required to, cause the amount of the security to be reduced by such amount that he or she deems appropriate, so that the remaining amount of the security adequately insures the completion of the remaining public improvements.
(h) Upon acceptance by the city of all required public improvements and the required security for maintenance and warranty is otherwise provided by the contractors or by others, the city will release the entire amount of the subdivider/developer's security.

9.02.112. Temporary Improvements

No temporary improvement will be required or approved by the city until the final plat has been approved, and a performance bond or other security in an amount determined by the city engineer is submitted.

(a) The applicant shall build and pay for all costs of temporary improvements required by the city and shall maintain those temporary improvements for the period specified by the city. Prior to construction of any temporary facility or improvement, the applicant shall file with the city a separate improvement agreement and escrow or, where authorized, a letter of credit, in an appropriate amount for temporary facilities, which agreement and escrow or letter of credit shall ensure that the temporary facilities will be properly constructed, maintained and removed.

(b) Any temporary public improvement (e.g., a temporary cul-de-sac, alley turnout, drainage swale, erosion control device, etc.) shall be placed within an easement established specifically for that purpose. The recording information of the instrument establishing the temporary easement shall be clearly shown on the final plat for the subdivision prior to approval of the final plat. A temporary easement for a required public improvement shall not be abandoned without the city engineer's approval and without written consent by the city.

9.02.113. Governmental Units

Governmental units to which these contract and security provisions apply may file, in lieu of the contract and security, a certified resolution or ordinance from officers or agents authorized to act in their behalf, agreeing to comply with the provisions of this section.

9.02.114. Failure to Complete Improvements

For plats for which no improvement agreement has been executed and no security has been posted, if the public improvements are not completed within the period specified by the city, the plat approvals shall be deemed to have expired. In those cases where an improvement agreement has been executed and security has been posted, and the required public improvements have not been installed within the terms of the agreement, the City may:

(a) Declare the agreement to be in default and require that all the public improvements be installed regardless of the extent of completion of the development at the time the agreement is declared to be in default;
(b) Suspend final plat approval until the public improvements are completed, and may record a document to that effect for the purpose of public notice;
(c) Obtain funds under the security and complete the public improvements itself or through a third party;
(d) Assign its right to receive funds under the security to any third party, including a subsequent owner of the subdivision for which public improvements were not constructed, in whole or in part, in exchange for that subsequent owner's promise to complete the public improvements on the property; or
(e) Exercise any other rights or remedies available under the law.

9.02.115. Acceptance of Dedication Offers

Acceptance of formal offers for the dedication of streets, public areas, easements, or parks shall be by authorization of the city's public works director. The approval by the city of final plat shall not, in and of itself, be deemed to constitute or imply the acceptance by the city of any street, public area, easement or park shown on the plat. The city may require the plat to be endorsed with appropriate notes to this effect.

9.02.116. Maintenance and Guarantee of Public Improvements

The subdivider/developer shall maintain all required public improvements for a period of two years following acceptance of the subdivision by the city and shall also provide a security that all public improvements will be free from defects for a period of two years following such acceptance by the city. The maintenance bond shall be in the form of a bond, letter of credit, or escrow as approved by the city engineer and city attorney.

City of Anna, Texas

Article 9.02 Subdivision Regulations

9/26/2023

Contents

Division 1. GENERALLY 1

Sec. 9.02.001. Authority; Extension to Extraterritorial Jurisdiction 1
Sec. 9.02.002. Interpretation and Purpose 2
Sec. 9.02.003. Compliance with Regulations 3
Sec. 9.02.004. Adequate Public Facilities Policy 3
Sec. 9.02.005. Jurisdiction 7
Sec. 9.02.006. Pending Applications 8
Sec. 9.02.007. Determination of Vested Rights 8
Sec. 9.02.008. Interpretation; Conflict; Severability 11
Sec. 9.02.009. Saving Provision 11
Sec. 9.02.010. Waivers, Suspensions, Amendments 12
Sec. 9.02.011. Proportionality Appeal 13
Sec. 9.02.012. Payment Of All Indebtedness Attributable to a Specific Property 16
Sec. 9.02.013. Right To Deny Hearing and Plat 16
Sec. 9.02.014. Misrepresentation of Facts 17
Sec. 9.02.015. Diversity Of Ownership 17
Sec. 9.02.016. Definitions 17

Division 2. PROCEDURES 27

Sec. 9.02.041. Introduction and Procedural Overview 27
Sec. 9.02.042. General Requirements for Plats 29
Sec. 9.02.043. Expiration Of Permits, Generally, Dormant Projects, and Exemptions from Vesting 36
Sec. 9.02.044. Conveyance Plats 37
Sec. 9.02.045. Preliminary Plats 40
Sec. 9.02.046. Final Plats 46
Sec. 9.02.047. Development Plats 50
Sec. 9.02.048. Replatting 53
Sec. 9.02.049. Amending Plats 56
Sec. 9.02.050. Plat Vacation 57
Sec. 9.02.051. Minor Plats 59

Division 3. SUBDIVISION DESIGN STANDARDS 60

Sec. 9.02.081. Streets 60
Sec. 9.02.082. Perimeter and Approach Streets 71

Sec. 9.02.083. Alleys 74
Sec. 9.02.084. Easements 75
Sec. 9.02.085. Blocks 77
Sec. 9.02.086. Sidewalks. 78
Sec. 9.02.087. Lots 78
Sec. 9.02.088. Building Lines 79
Sec. 9.02.089. Utility Services Not Provided by City 80
Sec. 9.02.090. Water and Wastewater Facility Design 82
Sec. 9.02.091. Storm Water Collection and Conveyance Systems 83
Sec. 9.02.092. Extension of Service of Utilities and Pro-Rata Agreements 85

Division 4. PUBLIC SITES AND OPEN SPACES 93

Sec. 9.02.131. Areas for Public Use 93
Sec. 9.02.132. Protection of Drainage and Creek Areas 93
Sec. 9.02.133. Public Improvement Districts 95
Sec. 9.02.134. Property Owners' or Homeowners' Associations 96
Sec. 9.02.135. Park Land Dedication & Development 98

Division 5. IMPROVEMENTS REQUIRED PRIOR TO ACCEPTANCE OF SUBDIVISION 104

Sec. 9.02.161. Improvements, In General 104
Sec. 9.02.162. Monuments 105
Sec. 9.02.163. Streetlights 106
Sec. 9.02.164. Street Names and Signs 106
Sec. 9.02.165. Street and Alley Improvements 107
Sec. 9.02.166. Retaining Wall Requirements, Construction Regulations, and Design Criteria 108
Sec. 9.02.167. Screening and Landscaping Construction Regulations, Requirements, and Design Criteria 108
Sec. 9.02.168. Water and Wastewater Requirements 111
Sec. 9.02.169. Storm Drainage and Water Quality Controls 112

Division 6. REQUIREMENTS FOR ACCEPTANCE OF SUBDIVISIONS BY CITY 114

Sec. 9.02.201. Withholding City Services and Improvements Until Acceptance 114
Sec. 9.02.202. Guarantee of Public Improvements 114
Sec. 9.02.203. Temporary Improvements. 118
Sec. 9.02.204. Failure to Complete Improvements 119
Sec. 9.02.205. Acceptance of Dedication Offers 119

Sec. 9.02.206. Maintenance Guarantee 119
Sec. 9.02.207. Construction Procedures....120
Sec. 9.02.208. Inspection and Acceptance of Public Improvements 120
Sec. 9.02.209. Issuance of Building Permits and Certificates of Occupancy....122

Division 7. FILING FEES; PLAT RE-SUBMISSION AND CONSTRUCTION INSPECTION FEES 123

Sec. 9.02.241. Schedule of Fees and Re-Submission Requirements 123

Division 8. ENFORCEMENT; VIOLATIONS; PENALTIES....124

Sec. 9.02.260. Enforcement; Violations; Penalties 124

Division 9. TABLES AND DIAGRAMS....125

Sec. 9.02.261. Tables and Diagrams. 125

Division 1. GENERALLY

Sec. 9.02.001. Authority; Extension to Extraterritorial Jurisdiction

(a) Authority

The following rules and regulations (sometimes referred to herein as “subdivision regulations”), adopted and codified as Article 9.02 of the Anna Code, are adopted under the authority of the constitution and laws of the State of Texas, including Chapter 212, Texas Local Government Code, being adopted after a public hearing on the matter and in a duly noticed meeting open to the public as required by law.

(b) Application in the ETJ

The City Council hereby extends the application of these subdivision regulations to the extraterritorial jurisdiction (“ETJ”) of the City, as that area may exist from time to time. These subdivision regulations shall be applicable to the filing of plats and the subdivision of land, as those terms or activities are defined herein and in Chapter 212 of the Texas Local Government Code, within the corporate limits of the City and its Extraterritorial Jurisdiction as they may be from time to time adjusted by annexation, disannexation, or otherwise. The City shall have all remedies and rights provided by said Chapter 212 with regard to the control and approval of subdivisions, plats, and other development both within the City and within its Extraterritorial Jurisdiction.

(c) Interlocal Agreement with Collin County

The City has executed an interlocal cooperation agreement with Collin County as authorized under Chapter 242 of the Texas Local Government Code. Collin County has assigned the City its respective authority to approve subdivision plats in the City's ETJ. The agreement generally provides for the City to enforce its subdivision regulations, within the applicable areas of the ETJ. These subdivision regulations will therefore be enforced to the fullest extent possible in the ETJ as agreed upon with Collin County.

(d) The authority to review, approve, conditionally approve, and disapprove applications for the platting or subdivision of land, including development plats, conveyance plats, preliminary plats, final plats, amended plats, replats, and vacations of plats, is the Planning and Zoning Commission (hereinafter “Commission”), in accordance with Chapter 212 of the Texas Local Government Code. The City Council of the City of Anna (hereinafter “Council”) may grant replats variances from these regulations pursuant to a public hearing as required in Chapter 212 of the Texas Local Government Code.

(e) The Director of Development Services is vested with the authority to approve minor plats, development plats, and replats involving four or fewer lots fronting an existing street and not requiring the creation of any new street or the extension of municipal facilities. The Director of Development Services may, for any reason, elect to present a minor plat to the Commission for approval. The Director of Development Services may not disapprove a minor plat and shall refer any minor plat refused for approval by the Commission within 30 days of the official date of application.

(f) The exclusion of such activities from these regulations does not waive any jurisdiction the City now exercises or may exercise over such matters.

(g) Except as provided above, no land may be subdivided or platted through the use of any legal description other than with reference to a plat approved by the Council in accordance with these regulations.

(h) Except as provided above and lots of record established prior to the effective date of this ordinance, no land shall be sold, leased, or transferred until the property owner has obtained approval of a minor plat, final plat, or conveyance plat from the Director of Development Services or the Commission as required by these regulations.

(i) The City shall withhold all public improvements and utilities, including the maintenance of streets and the provision of sewage facilities and water service, from all tracts, lots, or additions, the platting of which has not been officially approved by the Director of Development Services or the Commission.

(j) Except as provided in Sec. 9.02.003, no certificate of occupancy shall be issued for any parcel or tract of land inside the City limits until such property has received final plat approval and is in substantial conformity with the provisions of these regulations, and no private improvements shall take place or be commenced except in conformity with these regulations.

(k) A division of land under this subsection does not include a division of land into parts greater than five (5) acres, where each part has access to a public right-of-way and no public improvement is required.

Sec. 9.02.002. Interpretation and Purpose

(a) Minimum Requirements

In the interpretation and application of the provisions of these subdivision regulations, it is the intention of the City that the principles, standards, and requirements provided for herein shall be minimum requirements for the platting and developing of subdivisions within the City and its ETJ.

(b) Purpose

(1) These regulations are adopted for the following purposes:

(A) To protect and provide for the public health, safety, and general welfare of the City.

(B) To guide the future growth and development of the City in accordance with the Comprehensive Plan.

(C) To ensure safety from fire, flood, and other danger, and to prevent overcrowding of the land and undue congestion of population.

(D) To guide public and private development in order to provide adequate and efficient transportation, water, sewerage, drainage, stormwater quality, and other public requirements and facilities.

(E) To provide for the circulation of traffic and pedestrians required for the beneficial use of land and buildings and to avoid congestion throughout the City.

(F) To establish reasonable standards of design and procedures for platting and replatting to further the orderly layout and use of land and to ensure proper legal descriptions and monumenting of platted land.

(G) To ensure that adequate public facilities and services are available and will have sufficient capacity to serve the proposed subdivision or development and that the community will be required to bear no more than its fair share of the cost of providing the facilities and services.

(H) To prevent the pollution and sedimentation of streams and ponds; ensure the adequacy of drainage facilities; safeguard the water table, encourage the wise use and management of natural resources, and enhance the stability and beauty of the community and the value of the land.

(I) To provide for open spaces through the most efficient design and layout of the land.

(J) To remedy the problems associated with inappropriately platted lands, including premature subdivision, incomplete subdivision, and scattered subdivision.

(c) Minimum Standards

Minimum standards for development are contained in the City design standards, the building regulations in Chapter 4 of this code, and the other development regulations in this chapter. In addition, the comprehensive plan (including the future land use plan, thoroughfare plan, parks master plan, and other related plans, and amendments) contains policies designed to achieve an optimum quality of development in the City and its extraterritorial jurisdiction. If only the minimum standards are followed, as expressed by the various ordinances regulating land development, a standardization of development will occur. This will produce a monotonous municipal setting and physical environment within the community. Subdivision design shall be of a quality that will carry out the purpose and spirit of the policies expressed within the comprehensive plan and within this Article, and shall be encouraged to exceed the minimum standards required herein.

Sec. 9.02.003. Compliance with Regulations

(a) Recordation of Subdivision Plat

(1) No subdivision plat shall be recorded until a final plat, accurately describing the property, has been approved by the Commission in accordance with these subdivision regulations and:

(A) All improvements required by these subdivision regulations have been constructed and accepted by the City; or

(B) Adequate security for completion of improvements has been provided in accordance with Division 6 of this Article.

(2) Except as otherwise specifically authorized in these subdivision regulations, no certificate of occupancy shall be issued by the City for any parcel of land until a final plat or development plat, as applicable–of the land has been recorded.

(3) Compliance with the Comprehensive Plan and all City ordinances pertaining to the subdivision of land shall be required prior to approval of any development application governed by this Article. It is the developer's responsibility to be familiar with, and to comply with, City ordinances and the Comprehensive Plan. Applicable ordinances and other requirements include, but are not limited to, the following:

(A) The Comprehensive Plan, which includes the future land use plan, thoroughfare plan, park master plan, and all other associated maps and plans;

(B) The building regulations in Chapter 4 of this code;

(C) The development regulations in Chapter 9 of this code;

(D) All applicable design standards; and

(E) Other applicable sections in this code and any other applicable ordinances.

Sec. 9.02.004. Adequate Public Facilities Policy

(a) Adequate Service for Areas Proposed for Development, Generally

(1) Land proposed for development in the City and in the City's extraterritorial jurisdiction must be served adequately by essential public facilities and services, including water facilities, wastewater facilities, streets and pedestrian facilities, drainage facilities, and park facilities consistent with the requirements of these subdivision regulations. Where the development of land requires the submission and approval of a

conveyance plat or final plat under these subdivision regulations, such land shall not be approved for recording unless and until adequate public facilities necessary to serve the development exist or provision has been made for the facilities, whether the facilities are to be located within the property being developed or off-site.

(2) New development must be supported by adequate levels of public facilities and services.

(3) It is necessary and desirable to provide for dedication of rights-of-way and easements for capital improvements to support new development at the earliest stage of the development process.

(4) Requirements for dedication and construction of public infrastructure improvements to serve a proposed new development should be attached as conditions of approval of any development application that contains a specific layout of the development.

(5) There is an essential nexus between the demand on public facilities systems created by a new development and the requirement to dedicate rights-of-way and easements and to construct capital improvements to offset such impacts.

(6) The City desires to ensure both that development impacts are mitigated through contributions of rights-of-way, easements and construction of capital improvements, and that a development project contributes not more than its proportionate share of such costs.

(b) Conformance to Plans

Proposed capital improvements serving new development shall conform to and be properly related to the public-facilities elements of the City's adopted Comprehensive Plan, other adopted master plans for public facilities and services, and applicable capital improvements plans, and shall meet the service levels specified in such plans.

(c) Adequacy of Facilities, Generally

(1) Water

All lots, tracts, or parcels shown on a preliminary or final plat and on which development is proposed shall be connected to a public water system that has capacity to provide water for domestic use and emergency purposes, including adequate fire protection. The City may require the phasing of development and/or improvements in order to maintain adequate water system capacity.

(2) Wastewater

All lots, tracts, or parcels shown on a preliminary or final plat and on which development is proposed shall be served by an approved means of wastewater collection and treatment. The City may require the phasing of development and/or improvements in order to maintain adequate wastewater system capacity.

(3) Streets

Proposed streets serving new development shall provide a safe, convenient, and functional system for vehicular, bicycle, and pedestrian circulation and shall be properly related to the applicable master thoroughfare plan and any amendments thereto, and shall be appropriate for the particular traffic characteristics of each proposed subdivision or development. New developments shall be supported by a thoroughfare network having adequate capacity, and safe and efficient traffic circulation. Each development shall have adequate access to the thoroughfare network.

(4) Drainage

Drainage improvements serving new developments shall accommodate potential runoff from the entire upstream drainage area and shall be designed to prevent overloading the capacity of the downstream drainage system. The City may require the phasing of development, the use of control methods such as retention or detention, or the construction of off-site drainage improvements in order to mitigate the impacts of the proposed development. All drainage shall further comply with the City's floodplain damage prevention ordinance (Article 4.12 of this code) and related regulations.

(d) City Options

In order to maintain prescribed levels of public facilities and services for the health, safety, and general welfare of its citizens, and in accordance with these subdivision regulations, the City may require the dedication of easements and rights-of-way for or construction of on-site or off-site public infrastructure improvements for water, wastewater, street, drainage or park facilities to serve a proposed development, or require the payment of fees in lieu thereof. If adequate levels of public facilities and services cannot be provided concurrently with the schedule of development proposed, the City may deny the development until the public facilities and services can be provided, or require that the development be phased so that the delivery of facilities and services coincides with the demands for the facilities created by the development. The City may impose any conditions relating to the provision of public improvements specified by an ordinance or regulation establishing or amending the zoning for the property.

(e) Property Owner's Obligation

(1) Dedication and Construction of Improvements

In accordance with these subdivision regulations, and other applicable ordinances and regulations, the property owner shall dedicate all rights-of-way and easements for, and shall construct, capital improvements within the rights-of-way or easements for those water, wastewater, street, or drainage improvements needed to adequately serve a proposed development consistent with the applicable master facilities plans, whether the facilities are located on, adjacent to or outside the boundaries of the property being developed.

(A) Adjacent Road Improvements

In the case of adjacent or abutting streets, the City may require that the entire right-of-way be dedicated and improved to City design standards if the project is approved and funded through a City Capital Improvement Plan (CIP) or a similar County adopted plan as dictated in Texas House Bill 3699, depending on factors such as the impact of the development on the street, the timing of development in relation to the need for the street, and the likelihood that adjoining property will develop in a timely manner.

(B) Substandard Road Improvements

Where an existing street that does not meet the City's right-of-way or design standards abuts a proposed development, the City may require the property owner to dedicate the right-of-way for a standard width, and to improve the street according to the dimensions and specifications in the applicable thoroughfare plan, depending on factors such as the impact of the development on streets and traffic, the timing of development in relation to the need for the thoroughfare, and the likelihood that adjoining property will develop in a timely manner.

(2) Acquisition

Where the acquisition of any real property for right-of-way or easement purposes (or other public purposes) is necessary to serve the development and the real property is not owned or controlled by the developer, the developer must make a reasonable effort to negotiate the acquisition or purchase of the property, right-of-way or easement on behalf of the City.

(A) A reasonable effort must, at a minimum, include an offer to secure the property, right-of-way or easement where the offer amount is equal to or greater than the appraised value of the property, right-of-way or easement to be acquired as determined in a written appraisal performed by a Texas certified General Real Estate Appraiser.

(B) If the owner of the property sought to be acquired does not accept a developer's offer within 30 days, the developer may request in writing, on a form prepared by the City Attorney, that the City Council exercise available legal remedies to acquire the property. The City Council may take any action it deems appropriate in accordance with federal and state law.

(C) The developer must pay for any necessary appraisal, all acquisition costs, and all legal fees necessary to acquire the property, and any eminent domain procedures shall be prosecuted by the City Attorney or the City Attorney's designee.

(3) Facilities Impact Studies

The City may require that a property owner prepare a comprehensive traffic impact study, drainage study, sewer capacity study, water capacity study, or other public facilities study in order to assist the City in determining whether a proposed development will be supported with levels of public facilities and services necessary to meet the demand and offset the impact created by the development. The study shall identify, at a minimum, the adequacy of existing facilities and the nature and extent of any deficiencies, and the capital improvements needed to meet the adopted level of service assuming development at the intensity proposed in the development application. The study shall be subject to approval by the City Engineer. The City also may require, at the time of consideration of the approval of any subsequent permit that is part of the series of permits that is required for the completion of a project, an update of a public facilities study approved.

(f) Timing of Dedication and Construction

(1) Initial Provision for Dedication or Construction

The City shall require an initial demonstration that a proposed development shall be adequately served by public facilities and services at the time for approval of the first development application that portrays a specific plan of development, including but not limited to a petition for establishing a planned development zoning district, or other overlay zoning district; a petition for an annexation agreement or a subdivision development agreement; an application for a preliminary or final subdivision plat, or a preliminary or final development plat. As a condition of approval of the development application, the City may require provision for dedication of property, rights-of-way, or easements for, and construction of, capital improvements to serve the proposed development in a manner consistent with federal and state law.

(2) Deferral of Obligation

The obligation to dedicate rights-of-way for or to construct one or more capital improvements to serve a new development may be deferred until approval of a subsequent phase of the subdivision, at the sole discretion of the City Manager, upon written request of the property owner, or at the City's own initiative. As a condition of deferring the obligation, the City may require that the developer enter into a subdivision

improvement agreement approved by City Council, specifying the time for dedication of property, rights-of-way, easements, or construction of capital improvements serving the development.

Sec. 9.02.005. Jurisdiction

(a) Applicability

The provisions of these subdivision regulations shall apply to the following forms of land subdivision and development activity within the City limits and its extraterritorial jurisdiction:

(1) The division of land into two or more tracts, lots, sites, or parcels;

(2) All subdivisions of land, whether by metes and bounds division or by plat, that were outside the jurisdiction of these subdivision regulations in Collin County, Texas and that subsequently came within the jurisdiction of these subdivision regulations through annexation or extension of the city's extraterritorial jurisdiction;

(3) The combining of two or more contiguous tracts, lots, sites, or parcels for the purpose of creating one or more legal lots in order to achieve a more developable site, except as otherwise provided herein;

(4) When a building permit or other permit is required for the following uses:

(A) Construction of a new single-family or two-family dwelling unit(s);

(B) Additions that increase the square footage of an existing single-family or two-family home by more than 20% of its gross floor area;

(C) Construction of a new nonresidential or multiple-family structure;

(D) Additions that increase the square footage of an existing nonresidential or multiple-family building;

(E) Moving a residential dwelling unit or nonresidential structure onto a piece of property;

(5) Tracts where any public improvements are proposed;

(6) Development that requires a development plat to be submitted; and

(7) Development that is governed by other City ordinances or regulations that reference and make applicable these subdivision regulations

(b) Exemption

The following types of subdivision do not require approval by the City of Anna; however, the City shall not extend utilities, provide access to public roads, or issue a certificate of occupancy for the development of any property that has not received final plat approval, except as otherwise provided by this ordinance.

(1) Development of land legally platted and approved prior to the effective date of these subdivision regulations, except as otherwise provided for herein (construction of facilities and structures shall conform to design and construction standards in effect at the time of construction) and for which no re-subdivision is sought; or

(2) Existing cemeteries complying with all state and local laws and regulations; or

(3) Divisions of land created by order of a court of competent jurisdiction; or

(4) Divisions of land created solely by the erection of one or more fences on otherwise undivided land; or

(5) When a permit is requested for parcels, whether or not previously platted, for one or more of the following activities:

(A) Additions that increase the square footage of an existing single-family or two-family home by less than 20% of its gross floor area; or

(B) Construction of agricultural accessory buildings and residential accessory buildings smaller than 300 square feet, fences, and outdoor swimming pools; or

(C) Remodel or repair of a building that involves no expansion of the building footprint; or

(D) Moving a structure off a lot or parcel, or demolition of a structure; or

(E) Construction of a temporary field or sales office not exceeding 600 square feet, and located within the same property or development as the site under construction; or divisions of land created by the acquisition of property by the State of Texas or the City.

(6) The division of land into two or more parts where all parts are larger than five (5) acres and where no new building or improvement is proposed and no required public improvement is to be dedicated.

(7) The creation of a remainder of a tract caused by the platting of a portion of the tract provided the remainder is larger than 20 acres unless previously platted.

Sec. 9.02.006. Pending Applications

All applications for plat approval, including for final plats, that are pending on the effective date of these subdivision regulations and have not lapsed or expired shall be reviewed under the regulations in effect immediately preceding the effective date of these subdivision regulations.

Sec. 9.02.007. Determination of Vested Rights

(a) Purpose, Application, and Effect

(1) Purpose

The purpose of a vested rights petition is to determine whether one or more standards of these subdivision regulations should not be applied to a preliminary or final plat application by operation of state law, or whether certain plats are subject to expiration.

(2) Applicability

A vested rights petition may be filed with an application for a preliminary or final plat application. A vested rights petition also may be filed to prevent or determine the date of the expiration of certain plats.

(3) Effect

To the extent that a vested rights petition is granted, and as applicable, the plat application shall be decided in accordance with the standards specified in the order granting the petition based on prior subdivision requirements or development standards, or the approved plat otherwise subject to expiration shall be extended.

(b) Petition Requirements

(1) Who may petition

A vested rights petition may be filed by a property owner or the owner's authorized agents, including the applicant, with a preliminary or final plat application, or by the holder of a plat subject to expiration.

(2) Form of Petition

The vested rights petition shall allege that the petitioner has a vested right for some or all of the land subject to the plat application under Texas Local Government Code, Chapter 245 or successor statute, or pursuant to Texas Local Government Code, Section 43.002 or successor statute, that requires the City to review and decide the application under standards in effect prior to the effective date of the currently applicable standards. The petition shall include the following information and documents:

(A) A narrative description of the grounds for the petition;

(B) A copy of each approved or pending development application that is the basis for the contention that the City may not apply current standards to the plat application that is the subject of the petition;

(C) The submission date of the plat application, or of a development plan pursuant to which the plat was subsequently filed, if different from the completion filing date;

(D) The date the project for which the application for the plat was submitted was commenced;

(E) Identification of all standards otherwise applicable to the plat application from which relief is sought;

(F) Identification of the standards that the petitioner contends apply to the plat application;

(G) Identification of any current standards that the petitioner agrees can be applied to the plat application at issue;

(H) A copy of any prior vested rights determination by the City involving the same land; and

(I) Where the petitioner alleges that a plat subject to expiration should not be terminated, a description of the events, including any plat or other development applications on file that should prevent such termination.

(3) Time for Filing Petition

A vested rights petition shall be filed with a plat application for which a vested right is claimed, except that the petition may be filed at any time before the date of expiration of a plat subject to expiration to prevent expiration or determine the date of expiration.

(c) Processing of Petition and Decision

(1) Delivery of Petition.

The petitioner shall file the petition with the Director of Development Services, who shall assess same for compliance with Subsection (b) of this section. A copy of the petition shall be forwarded to the City Attorney following acceptance.

(2) Decision by City Council

The City Council shall decide the vested rights petition. The request must be accompanied by a waiver of the time for decision on the plat application imposed under these subdivision regulations pending decision by the Council, which shall stay further proceedings on the application. The Council shall decide the petition, after considering the Director of Development Service's report, within 30 calendar days of receipt of the notice of appeal.

(d) Action on Petition and Order

(1) Action on the Petition

The City Council may take any of the following actions on the vested rights petition:

(A) Deny the relief requested in the petition, and direct that the plat application shall be reviewed and decided under currently applicable standards;

(B) Grant the relief requested in the petition, and direct that the plat application shall be reviewed and decided in accordance with the standards contained in identified prior subdivision regulations;

(C) Grant the relief requested in part, and direct that certain identified current standards shall be applied to the plat application, while standards contained in identified prior subdivision regulations also shall be applied; or

(D) For petitions filed to prevent or determine the date of the expiration of an approved plat, determine whether the approved plat should be terminated, or specify the expiration date or the conditions of expiration for such plat.

(2) Order on the petition.

Each decision on the vested rights petition shall be memorialized in an order issued by the City Council identifying the following:

(A) The nature of the relief granted, if any;

(B) The approved or filed plat application(s) or other development application(s) upon which relief is premised under the petition;

(C) Current standards that shall apply to the plat application for which relief is sought;

(D) Prior standards that shall apply to the plat application for which relief is sought, including any procedural standards;

(E) The statutory exception or other grounds upon which relief is denied in whole or in part on the petition;

(F) For petitions filed to prevent or determine the date of the expiration of an approved plat, determine whether the approved plat should be terminated, and specify the expiration date or the conditions of expiration for the plat.

(e) Criteria for Approval.

The City Council shall decide the vested rights petition based on the following factors:

(1) The nature and extent of prior plat or other development applications filed or approved for the land subject to the petition;

(2) Whether any prior vested rights determinations have been made with respect to the property subject to the petition;

(3) Whether any prior approved applications for the property have expired or have been terminated in accordance with law;

(4) Whether any statutory exception applies to the standards in the current subdivision regulations from which the applicant seeks relief;

(5) Whether any prior approved plat or other development applications relied upon by the petitioner have expired;

(6) For petitions filed to prevent or determine the date of the expiration of an approved plat, whether any of the events preventing expiration have occurred.

(f) Application Following Relief Order

Following the City Council's final decision on the vested rights petition, the property owner shall conform the plat application for which relief is sought to such decision. If the plat application on file is consistent with the relief granted on the vested rights petition, no revisions are necessary. Where proceedings have been stayed on the plat application pending a decision by the City Council on the vested rights petition, proceedings on the application shall resume after the council's decision on the vested rights petition.

(g) Expiration

Relief granted on a vested rights petition shall expire on occurrence of one of the following events:

(1) The petitioner or property owner fails to submit a required revised plat application consistent with the relief granted within 30 days of the final decision on the petition;

(2) The plat application for which relief was granted on the vested rights petition is denied under the criteria made applicable through the relief granted on the petition; or

(3) The plat application for which relief was granted on the vested rights petition expires.

Sec. 9.02.008. Interpretation; Conflict; Severability

(a) Interpretation

In their interpretation and application, these subdivision regulations shall be held to be the minimum requirements for the promotion of the public health, safety, and general welfare and shall be construed broadly to promote the purposes for which they are adopted.

(b) Conflict with Other Laws

To the extent that these subdivision regulations promulgate standards or impose restrictions or duties that differ from those imposed by other City ordinances, rules, or regulations, the regulations that are most stringent or restrictive shall prevail.

(c) Severability

If any part or provision of these subdivision regulations, or the application of these subdivision regulations to any person or circumstance, is adjudged invalid by any court of competent jurisdiction, the judgment shall be confined in its operation to the part, provision, or application directly involved in the controversy in which the judgment shall be rendered, and it shall not affect or impair the validity of the remainder of these regulations or the application of them to other persons or circumstances. The City Council hereby declares that it would have enacted the remainder of these regulations even without any such part, provision, or application that is judged to be invalid.

Sec. 9.02.009. Saving Provision

These subdivision regulations shall not be construed as abating any action now pending under, or by virtue of, prior existing subdivision regulations, or as discontinuing, abating, modifying, or altering any penalty accruing or about to accrue, or as affecting the liability of any person, firm or corporation, or as waiving any right of the City under any section or provision existing at the time of adoption of these subdivision regulations, or as vacating or annulling any rights obtained by any person, firm or corporation, by lawful action of the City except as shall be expressly provided in these subdivision regulations.

Sec. 9.02.010. Waivers, Suspensions, Amendments

(a) Generally

(1) Where the City Council finds that undue hardships will result from strict compliance with a certain provision(s) of these subdivision regulations, or where the purposes of these regulations may be served to a greater extent by an alternative proposal, the City Council may approve a waiver, suspension, or amendment from any portion of these regulations so that substantial justice may be done and the public interest is secured, provided that the waiver, suspension, or amendment shall not have the effect of nullifying the intent and purpose of these regulations, and further provided that the City Council shall not approve a waiver/suspension unless it shall make findings based upon the evidence presented to it in each specific case that:

(A) Granting the waiver/suspension will not be detrimental to the public safety, health, or welfare, and will not be injurious to other property or to the owners of other property, and the waiver, suspension, or amendment will not prevent the orderly subdivision of other property in the vicinity;

(B) The conditions upon which the request for a waiver, suspension, or amendment is based are unique to the property for which the waiver, suspension, or amendment is sought, and are not applicable generally to other property;

(C) Because of the particular physical surroundings, shape and/or topographical conditions of the specific property involved, a particular undue hardship to the property owner would result, as distinguished from a mere inconvenience or increased expense, if the strict letter of these regulations is carried out;

(D) The waiver, suspension, or amendment will not in any manner vary the provisions of the zoning ordinance, Comprehensive Plan (as amended), or any other adopted plan(s) or ordinance(s) of the City; and

(E) An alternate design will generally achieve the same result or intent as the standards and regulations prescribed herein.

(2) Such findings of the City Council, together with the specific facts upon which such findings are based, shall be incorporated into the official record of the City Council meeting at which a waiver, suspension, or amendment is considered.

(b) Procedures

(1) A petition for a waiver, suspension, or amendment shall be submitted in writing to the City Manager or the City Manager's designee by the property owner before the plat is officially filed and submitted for the consideration by the Commission. The petition shall state fully the grounds for the application, and all of the facts relied upon by the petitioner.

(2) All waivers/suspensions shall be approved or disapproved by the Commission.

(3) All waivers/suspensions shall have final approval or disapproval by the City Council.

(c) Criteria for Waivers/Suspensions from Development Dedications.

Where the City Council finds that the imposition of any development dedication pursuant to these regulations exceeds reasonable benefit to the property owner, or is so excessive as to constitute confiscation of the tract to be platted, it may approve a full or partial, at its discretion, waiver/suspension to such requirements, so as to prevent such excess. In order to qualify for such a waiver/suspension, the property owner shall demonstrate that the costs of the dedication imposed pursuant to these subdivision regulations substantially exceeds the proportionality standards as outlined in Sec. 9.02.011 of these subdivision regulations.

(d) Criteria for Waivers/Suspensions for Street Dedications.

Where the City Council finds that the imposition of any dedication or construction requirement for streets pursuant to these regulations exceeds reasonable benefit to the property to be platted, it may approve waivers/suspensions for such requirements so as to prevent such excess. In order to qualify for such a waiver/suspension, the property owner shall demonstrate that the costs of right-of-way dedication and construction of streets other than streets classified as local streets imposed pursuant to these regulations substantially exceeds the proportionality standards as outlined in Sec. 9.02.011 of these subdivision regulations.

(e) Conditions on Approved Waiver/Suspension.

In approving a waiver/suspension, the City Council may require such conditions as will, in its judgment, secure substantially the purposes described in section Sec. 9.02.002 of these subdivision regulations.

Sec. 9.02.011. Proportionality Appeal

(a) Definitions

For the purposes of this section, the following terms, phrases, words, and their derivatives shall have the meanings given herein. Definitions not expressly prescribed herein are to be determined in accordance with customary usage in municipal planning and engineering practices. Words used in the present tense include the future, words in the plural number include the singular number, and words in the singular number include the plural. The words “shall” and “must” are deemed as mandatory. The word “may” is deemed as permissive.

Public facilities system means the collection of water, wastewater, street, drainage or park facilities owned or operated by or on behalf of the City for the purpose of providing services to the public, including existing and new developments.

Public infrastructure improvement means a water, wastewater, street, drainage, or park facility that is a part of one or more of the City's public facilities systems.

(b) Purpose, Applicability, and Effect.

(1) Purpose

The purpose of a proportionality appeal is to assure that a requirement to dedicate, construct or pay a fee for a public infrastructure improvement imposed on a proposed plat as a condition of approval does not result in a disproportionate cost burden on the property owner, taking into consideration the nature and extent of the demands created by the proposed development on the City's public facilities systems.

(2) Applicability

An appeal under this section may be filed by a property owner to contest any requirement to dedicate land, to construct improvements, or to pay development fees (other than impact fees adopted under Texas Local Government Code Chapter 395), for a public infrastructure improvement, which requirement is imposed under the City's subdivision regulations to a plat application pursuant to these subdivision regulations, whether the requirement is applicable under uniform standards, or is imposed pursuant to an individual evaluation of the proposed subdivision.

(c) Proportionality Determination by City Engineer

Prior to a decision by the Commission on a preliminary plat application, or if no preliminary plat application is required, on a final plat application, the City Engineer (who, for the purposes of this Subsection (c), must be a licensed professional engineer) shall affirm that public infrastructure improvements being imposed as a

condition of plat approval is roughly proportionate to the demand created by the development on the City's public facilities systems, taking into consideration the nature and extent of the development proposed.

(1) In making a proportionality determination, the City Engineer may rely upon categorical findings pertaining to on-site improvements; the proposed or potential use of the land; the timing and sequence of development in relation to availability of adequate levels of public facilities; impact fee studies or other studies that measure the demand for services created by the development and the impact on the City's public facilities systems; the function of the public infrastructure improvements in serving the proposed development; the degree to which public infrastructure improvements to serve the subdivision are supplied by other developments; the anticipated participation by the City in the costs of such improvements; any reimbursements for the costs of public infrastructure improvements for which the proposed development is eligible; or any other information relating to the mitigating effects of the public infrastructure improvements on the impacts created by the development on the City's public facilities systems.

(2) Based upon the proportionality determination, the City Engineer shall affirm that the public infrastructure improvement requirements of the subdivision regulations do not impose costs on the developer for such improvements that exceed those roughly proportionate to those incurred by the City in providing public facilities to serve the development.

(3) The City Engineer may promulgate any application requirements that may assist in making the proportionality determination required by this Section (c)

(d) Commission Determination

The Commission shall take into account the City Engineer's report concerning the proportionality of public infrastructure improvement requirements to be applied to a proposed conveyance, preliminary, or final plat application, as the case may be, in making its decision on the plat application, and shall identify any variation to the requirements that are to be included as conditions to plat approval.

(e) Appeals

(1) Who May Appeal

An appeal to the City Council under this Subsection (e) may be filed by a property owner or the applicant for a conveyance, preliminary, or final plat, in which a requirement to dedicate land for, construct or pay a fee, other than an impact fee, for a public infrastructure improvement has been applied or attached as a condition of approval, or as grounds for denying the plat application.

(2) Time for Filing and Request for Extension of Time

The appeal shall be filed in writing within 10 days of the date the Commission takes action to recommend applying the public infrastructure improvement requirement to the plat application. The appeal shall be filed with the City Manager and shall be forwarded to the City Council for consideration in conjunction with its deliberations on the plat application. The applicant may request postponement of consideration of the plat application by the City Council pending preparation of the study required by Subsection (4) below, in which case the applicant must officially withdraw the plat application from consideration.

(3) Form of Appeal

An appeal under this Subsection (e) shall allege that application of the standard or the imposition of conditions relating to the dedication, construction, or fee requirement (other than impact fees adopted under Texas Local Government Code Chapter 395) is not roughly proportional to the nature and extent of the impacts created by the proposed development on the City's public facilities systems, or does not reasonably benefit the proposed development.

(4) Study Required

(A) The appellant shall provide a study in support of the appeal that includes the following information within 30 days of the date of appeal, unless a longer time is requested:

(B) Total capacity of the City's water, wastewater, street, drainage, or park system to be utilized by the proposed development, employing standard measures of capacity and equivalency tables relating the type of development proposed to the quantity of system capacity to be consumed by the development. If the proposed development is to be developed in phases, such information also shall be provided for the entire development proposed, including any phases already developed.

(C) Total capacity to be supplied to the City's water, wastewater, street, drainage, or park facilities system by the dedication of an interest in land, construction of improvements, or fee contribution. If the plat application is proposed as a phased development, the information shall include any capacity supplied by prior dedication, construction, or fee payments.

(D) Comparison of the capacity of the City's public facilities system(s) to be consumed by the proposed development with the capacity to be supplied to such system(s) by the proposed dedication of an interest in land, construction of improvements, or fee payment. In making this comparison, the impacts on the City's public facilities system(s) from the entire development shall be considered.

(E) The amount of any City participation in the costs of oversizing the public infrastructure improvement to be constructed in accordance with the City's requirements.

(F) Any other information that shows the alleged disproportionality between the impacts created by the proposed development and the dedication, construction, or fee requirement imposed by the City.

(f) Land in Extraterritorial Jurisdiction

Where the subdivision or the public infrastructure improvements are located in the extraterritorial jurisdiction of the City and are to be dedicated to a county under an interlocal agreement under Texas Local Government Code Chapter 242, an appeal or study in support of the appeal shall not be accepted as complete for filing by the City Manager unless the appeal or study is accompanied by verification that a copy has been delivered to Collin County.

(g) Decision

The City Council shall decide the appeal in conjunction with its decision on the plat application. The Council shall base its decision on the criteria listed in Subsection (h) of this section, and may take one of the following actions:

(1) Deny the appeal, and impose the standard or condition on the plat application in accordance with the City Engineer's recommendation or the Commission's recommendation on the plat; or

(2) Deny the appeal, upon finding that the proposed dedication, construction, or fee requirements are inadequate to offset the impacts of the subdivision on the public facilities system for water, wastewater, street, drainage, or park improvements, and either deny the plat application or require that additional public infrastructure improvements be made as a condition of approval of the application; or

(3) Grant the appeal, and waive in whole or in part any dedication, construction, or fee requirement for public infrastructure improvements to the extent necessary to achieve proportionality; or

(4) Grant the appeal, and direct that the City participates in the costs of acquiring land for or constructing the public infrastructure improvement under standard participation policies.

(h) Criteria for Approval

In deciding an appeal under this section, the City Council shall determine whether the application of the standard or condition requiring dedication of an interest in land for, construction of, or payment of a fee for public infrastructure improvements is roughly proportional to the nature and extent of the impacts created by the proposed subdivision on the City's public facilities systems for water, wastewater, street, drainage or park facilities, and reasonably benefits the development. In making such determination, the Council shall consider the evidence submitted by the appellant, the City Engineer's report and recommendation, considering in particular the factors identified in Subsection (c) of this section, and, where the property is located within the City's extraterritorial jurisdiction, any recommendations from the County.

(i) Action following Decision

If the relief requested under the proportionality appeal is granted in whole or in part by the City Council, the dedication, construction, or fee requirement initially recommended by the Commission as a condition of plat approval shall be modified accordingly, and the standards applied or the conditions attached to Commission's recommendation on the plat application shall be conformed to the relief granted. Thereafter, the appellant shall re-submit the plat application to the City Council within 90 days of the date relief under the appeal is granted, in whole or in part, showing conformity with the City Council's decision on the appeal.

(j) Expiration of Relief

If an applicant for plat approval prevails on a proportionality appeal, but fails to conform the plat to the relief granted by the City Council within the 90-day period provided, the relief granted by the City Council on the appeal shall expire and:

(1) The Council may extend the time for filing the revised plat application for good cause shown, but in any event, the expiration date for the relief granted shall not be extended beyond one year from the date relief was granted on the appeal.

(2) If the plat application is modified to increase the number of residential units or the intensity of nonresidential uses, the responsible official may require a new study to validate the relief granted by the City Council.

(3) If the plat application for which relief was granted is denied on other grounds, a new petition for relief shall be required on any subsequent application.

Sec. 9.02.012. Payment Of All Indebtedness Attributable to a Specific Property

No person who owes delinquent taxes, delinquent paving assessments, delinquent fees, or any other delinquent debts or obligations to the City, that are directly attributable to a piece of property, shall be allowed to receive approval for any plat or replat until the taxes, assessments, debts or obligations directly attributable to said property and owed by the property owner or a previous owner thereof shall have been first fully discharged by payment, or until an arrangement satisfactory to the City Manager has been made for the payment of such debts or obligations. It shall be the applicant's responsibility to provide evidence or proof that all taxes, assessments, debts, or obligations have been paid at the time of submission for any application for approval under these subdivision regulations. A tax certificate shall also be provided as required by Section 12.002 of the Texas Property Code.

Sec. 9.02.013. Right To Deny Hearing and Plat

The City may deny a hearing and any application pursuant to these subdivision regulations if the applicant does not submit all information and fees required by these subdivision regulations.

Sec. 9.02.014. Misrepresentation of Facts

It shall be a violation of these subdivision regulations for any person to knowingly or willfully misrepresent, or fail to include, any information required by these subdivision regulations in any plat application or during any public hearing or meeting of the Commission or City Council. Such a violation shall constitute grounds for denial of the plat.

Sec. 9.02.015. Diversity Of Ownership

Where the desirable development of a residential neighborhood, business park, commercial center, or other planned development is dependent upon coordination of diverse land ownership (i.e., separate tracts of land owned by more than one person), the Director of Development Services may require that an overall area or neighborhood study be prepared prior to and as an additional requirement and condition of the submission of any plat application so that individual subdivisions may be developed in harmony with one another and their environs in accordance with the comprehensive plan.

Sec. 9.02.016. Definitions

For the purpose of these subdivision regulations, the following terms, phrases, words, and their derivations shall have the meaning given herein. When not inconsistent with the context, words used in the present tense shall include the future tense; words in the plural number shall include the singular number (and vice versa); and words in the masculine gender shall include the feminine gender (and vice versa). When words and terms are defined herein, and are also defined in another City ordinance, they shall be read in harmony unless there exists an irreconcilable conflict, in which case the definition contained in these subdivision regulations shall control. Definitions not expressly prescribed herein are to be determined in accordance with customary usage in municipal planning and engineering practices. If no such customary usage exists, the definition found within the latest edition of Webster's Dictionary shall be used. The word “shall” is always mandatory, while the word “may” is merely directory.

(1) Addition

See Division 1.Sec. 9.04.016(73) Subdivision (also known as “Addition”).

(2) Administrative Officers or Officials

Any officer of the City referred to in these subdivision regulations by title–including but not limited to the Director of Development Services, City Manager, City Engineer, City Secretary, Fire Chief, Police Chief, Public Works Director, and Chief Building Official–shall be the person so retained in that position by the City, or his or her duly authorized representative.

(3) Alley

A minor public right-of-way not intended to provide the primary means of access to abutting lots, which is used primarily for vehicular service access to the back or sides of properties that derive primary access from a street. The length of an alley segment is to be measured from the right-of-way lines of the streets from which the alley is provided access, or from the center point of an intersection with another alley that connects to a street.

(4) Amended or Amending Plat

A revised plat correcting errors or making minor changes to a recorded plat pursuant to Section 212.016 of the Texas Local Government Code.

(5) Amenity

An improvement to be dedicated to the public or to the common ownership of the lot owners of the subdivision and providing an aesthetic, recreational, or other benefit, other than those prescribed by these subdivision regulations.

(6) Anna Code

The Anna City Code of Ordinances.

(7) Applicant

A person or entity who submits an application for an approval required by these subdivision regulations. Also sometimes referred to as “owner,” “owner's agent,” “developer,” “subdivider,” or other similar term.

(8) Application or Development Application

A written request for an approval required by these subdivision regulations.

(9) Approach Street

A street other than a perimeter street that provides access to and from an improved street.

(10) Assurance

Any form of security that is submitted to the City for the purposes of ensuring that adequate monies are available for the construction of improvements in relation to an approved plat, an approved construction plan, or both.

(11) Base Flood

The flood having a 1% chance of being equaled or exceeded in any given year. The base flood shall be determined by using a fully developed watershed and the City's Storm Drainage Design Manual criteria for a 100-year storm.

(12) Block Length or Street Length

For a residential subdivision, that distance measured along the centerline of the street from the intersection center point of one through street to the intersecting center point of another street, or to the midpoint of a cul-de-sac. The through street referred to above shall not be a cul-de-sac, a dead-end street, or a looped street, but shall be a street that clearly has two points of ingress from two different directions.

(13) Bond

Any form of an obligation undertaken by a surety acceptable to the City and in an amount and form satisfactory to the City.

(14) Building Setback Line

The line within a property defining the minimum horizontal distance between a building or other structure and the adjacent street right-of-way line, property line, a creek, or some other specific feature.

(15) Capital Improvements Program (CIP)

The official proposed schedule, if any, of all future public projects listed together with cost estimates and the anticipated means of financing each project, as adopted by City Council.

(16) City

The City of Anna, Texas unless otherwise expressly stated.

(17) City Attorney

Such attorney, or firm of attorneys, that has been specifically retained by the City to assist in legal matters. This term shall also apply if the City retains a person to perform the functions of City Attorney as an official City employee.

(18) City Council or Council

The duly elected governing body of the City of Anna, Texas.

(19) City Engineer

Such licensed professional engineer, or firm of licensed professional consulting engineers, that has been specifically employed by the City to assist in engineering-related matters. The City Manager may assign the duties of the City Engineer (as described in these subdivision regulations) to another City official whether or not licensed as a professional engineer.

(20) City Manager

The person holding the position of the City's chief executive officer (e.g., City Manager), as appointed by the City Council.

(21) City Standard Street

A street that meets or exceeds the minimum specifications for construction, street size, and right-of-way width in the City's subdivision regulations and design standards, and that is constructed to the ultimate configuration for the type of street it is designated for on the City's Thoroughfare Plan.

(22) Commission

The City of Anna’s appointed Planning and Zoning Commission.

(23) Completion Filing Date

The date upon which a submitted application is determined or deemed completed, with all necessary forms, fees, plans, information, and copies submitted to the City in accordance with the City's application requirements for the purposes of a development application and is accepted by the City for filing. The completion filing date is not necessarily the same as the submission date (see “Submission Date”).

(24) Comprehensive Plan or Master Plan

The Comprehensive Plan of the City and adjoining areas as adopted by the City Council, including all its revisions and plan elements (including, but not limited to, the future land use plan, thoroughfare plan, parks master plan, etc.). This plan indicates the general locations recommended for various land uses, transportation routes, public and private buildings, streets, parks, water and wastewater facilities, and other public and private developments and improvements.

(25) Contiguous

Lots are contiguous when at least one boundary line or point of one lot touches a boundary line, or lines, or point of another lot.

(26) Conveyance Plat

An interim plat recording the subdivision of property or defining a remainder of property created by the approval of a final plat for a portion of property, where approval of final development plans is not sought.

(27) County Plat Records

The plat records of Collin County.

(28) Cul-de-sac

A street having only one outlet to another street, and that terminates on the opposite end by a vehicular turnaround or “bulb.” The length of a cul-de-sac is to be measured from the intersection center point of the adjoining through street to the midpoint of the cul-de-sac bulb.

(29) Dead-end Street

A street, other than a cul-de-sac, with only one outlet.

(30) Design Standards

The collection of rules, regulations, criteria, standards, specifications, construction drawings, and general notes, including but not limited to those promulgated under the authority of these subdivision regulations, and other existing ordinances, including the design standards in Article 9.03 of this chapter and any applicable design standards and requirements in Chapter 4 of this code.

(31) Developer

The owner of land proposed to be developed as a residential or nonresidential subdivision, or the owner's authorized representative.

(32) Development

Any activity that requires the submission of a subdivision plat or the securing of a building permit.

(33) Development Plat

A plat governed by these subdivision regulations in accordance with Subchapter B of Chapter 212 of the Texas Local Government Code, as amended.

(34) Easement

Any area within, on, over, and/or under real property in which the City (and/or another entity, such as a franchised utility) has an interest involving a right of use of the property and/or right to exclude uses of the property–such as requiring removal of all or any part of any buildings, fences, trees, shrubs, or other improvements or uses that interfere with the lawful purpose of the holder of the easement–including but not limited to those required for provision of sidewalks, utility services, or access to property or equipment owned and/or maintained by the City.

(35) Director of Development Services

A person hired or designated by the City Manager to supervise or oversee the Planning Department of the City, and to exercise the authority of the Director of Development Services as mentioned in these subdivision regulations.

(36) Engineer

A person duly authorized and licensed under the provisions of the Texas Engineering Registration Act to practice the profession of engineering.

(37) Engineering Plans or Drawings

The maps or drawings accompanying a plat and showing the specific location and design of public improvements to be installed in the subdivision in accordance with the requirements of the City as a condition of approval of the plat.

(38) Escrow

A deposit of cash with the City in accordance with these subdivision regulations.

(39) Extraterritorial Jurisdiction (ETJ)

The area of land lying outside and adjacent to the corporate limits of the City over which the City has legal control as set forth in Chapter 42 of the Texas Local Government Code.

(40) FEMA

The Federal Emergency Management Agency of the U.S. government.

(41) Final Plat (also “Record Plat” or “As-Built Plat”)

The one official and authentic map of any given subdivision of land prepared from actual field measurement and staking of all identifiable points by a registered professional land surveyor (RPLS), with the subdivision location referenced to a survey corner, and with all boundaries, corners, and curves of the land division, and with all streets, rights-of-way, easements, dedications and other pertinent features, sufficiently described so that they can be reproduced without additional references. An amending plat and a replat are also final plats.

(42) Frontage

The side of a lot, parcel, or tract abutting a street right-of-way.

(43) Governing Body

The City Council of the City of Anna, Texas.

(44) Improved street

A street constructed to City standards or a City standard street.

(45) Land Planner

Persons, including registered professional land surveyors (RPLS) or engineers, who possess and can demonstrate a valid proficiency in the planning of residential, nonresidential, and other related developments, such proficiency often having been acquired by education in the field of landscape architecture or other specialized planning curriculum, or by actual experience and practice in the field of land planning, and who may be certified as a member of the American Institute of Certified Planners (AICP).

(46) Lot or Lot of Record

A divided or undivided tract or parcel of land having frontage on a public or private street, and that is, or may in the future be, offered for sale, conveyance, transfer, or improvement; and that is designated as a distinct and separate tract; and that is identified by a tract or lot number or symbol in a duly approved subdivision plat that has been properly filed of record at the county.

(47) Major Plat

Any plat not classified as a minor plat, including but not limited to subdivisions of more than four lots, or any plat that requires the construction of a new street (or portion thereof) or the extension of a municipal facility as required by this Article or any other City ordinance.

(48) Major Subdivision

A subdivision that cannot be approved by means of an application for a minor plat.

(49) Median Width

The width of the portion of a street median including the entire width of the median's curbs.

(50) Minor Plat

A subdivision resulting in four or fewer lots, provided that the plat does not create any new street or the extension of any municipal facilities to serve any lot within the subdivision.

(51) Minor Subdivision

A subdivision that may be approved by means of an application for a minor plat.

(52) Off-Site Facilities or Improvements

The facilities or improvements that are required to serve the site but that are not located within the boundaries of the plat or immediately adjacent to the property, and that may or may not be immediately required to serve the development to serve the development. These include oversizing for streets, sewer lines, water lines, and storm drainage facilities, as well as the excess capacity of facilities such as water storage tanks and wastewater treatment plants available for new development.

(53) On-Site Facilities or Improvements

The existing or proposed facilities or improvements constructed within the property boundaries of the plat, and the existing or proposed facilities required to be constructed or improved immediately adjacent to the property that are needed to serve the development. Facilities and improvements include, but are not limited to, streets, alleys, water lines, sewer lines, storm drainage facilities, sidewalks, screening devices, and curbs and gutters.

(54) Overlength Street (or Alley)

A street segment, or a cul-de-sac or alley segment, that exceeds the maximum length allowed by these subdivision regulations, as measured along the centerline of the street from the intersection center point of one through street, which shall not be a cul-de-sac or dead-end or looped street, to the intersecting center point of another through street or, in the case of a cul-de-sac, to the midpoint of the cul-de-sac. For an alley segment, the measurement shall be to the right-of-way lines of the streets from which the alley is provided access, including any alley turnouts, or from the center point of an intersection with another alley that connects to a street.

(55) Pavement Width

The width of the portion of a street that is available for vehicular traffic, combined with the width of any paved shoulder and–for streets with curbs–the width of the entire curb.

(56) Perimeter Street

Any existing or planned street that is adjacent to the subdivision or addition to be platted.

(57) Person

Any individual, association, firm, corporation, governmental agency, political subdivision, or legal entity of any kind.

(58) Planning Department

The City's department, and related employees, that has been specifically created and maintained by the City to assist in planning and zoning related matters. This term shall also apply to any official city employee in the Planning Department, including any practicing, professional land planner, administrative support, and/or firm of professional land planners.

(59) Plat

A preliminary plat of a subdivision, a final plat of a subdivision, a development plat, or an amending plat or replat, as determined by the context.

(60) Preliminary Plat

The graphic expression of the proposed overall plan for subdividing, improving, and developing a tract, showing in plain view the proposed street and lot layout, easements, dedications, and other pertinent features, with such notations as are sufficient to substantially identify the general scope and detail of the proposed development.

(61) Property Owner (may also be known as “Subdivider” or “Developer”)

Any person or firm, association, syndicate, general or limited partnership, corporation, trust, or other legal entity, or any agent thereof, that has sufficient proprietary interest in the land sought to be subdivided to commence and maintain proceedings to subdivide the same under these subdivision regulations. In any event, the term “property owner” shall be restricted to include only the owner(s) or authorized agent(s) of such owner(s), such as a developer, of land sought to be subdivided.

(62) Public Improvements

Facilities, infrastructure, and other appurtenances, typically owned and maintained by the City (but not necessarily located upon City-owned property or right-of-way). Public improvements can be located on public property or upon private property in a public easement. Public improvements serve a public purpose in providing a needed service or commodity, such as wastewater collection and treatment and water storage and distribution, and protect the general health, safety, welfare, and convenience of the City's citizens, including efficiency in traffic circulation and access for emergency services. The term “public improvements” shall not include facilities or infrastructure of private providers of utility services other than water and wastewater, but shall be deemed to include facilities and infrastructure that the City would normally require of a development but that will be owned and maintained by an entity such as a homeowners' association, as in the case of private streets.

(63) Recorded Final Plat

A final plat that has been duly recorded in the property records of Collin County, Texas.

(64) Replatting or replat

The re-subdivision of any part or all of a block or blocks of a previously platted subdivision, addition, lot, or tract.

(65) Right-of-way or ROW

A parcel of land occupied, or intended to be occupied, by a street or alley. Where appropriate, “right-of-way” may include other facilities and utilities such as sidewalks; railroad crossings; electrical, communication, oil and gas facilities; water and sanitary and storm sewer facilities; street improvements; and any other special use. The use of right-of-way shall also include parkways and medians outside of the paved portion of the street. The usage of the term “right-of-way” for land platting purposes shall mean that every right-of-way hereafter established and shown on a final plat is to be separate and distinct from the lots or parcels adjoining such right-of-way, and shall not be included within the dimensions or areas of such lots or parcels.

(66) RPLS

An acronym for registered professional land surveyor.

(67) Sign, Subdivision Entry

A specific monument sign located at the entry of a platted subdivision from a local, collector, or arterial street.

(68) Standard Street.

See “City Standard Street.”

(69) Street

That part of a right-of-way, whether public or private and however designated, that provides vehicular access to adjacent land and other streets and may include additional facilities for transportation of persons, utilities, drainage, and other street improvements. Streets may be of the following categories:

(A) Highway

The Highway classification is reserved for Major Highways that have consistent speeds of 55 mph or more and have, or are planned to have, frontage roads for access. The network formed is integrated and generally offers connections to areas outside the City and its extraterritorial jurisdiction. U.S. 75 and the Collin County Outer Loop are highways.

(B) Major Arterial

Major Arterial roads provide mobility to nearby areas outside the City while also providing access to major developments. These streets generally move high volumes of traffic through the City and provide access to the highway network. FM 455 (White Street), State Highway 5 (Powell Parkway), State Highway 121 (Sam Rayburn Highway), Ferguson Parkway, Rosemond Parkway, Leonard Avenue, and Mantua Drive are major arterial streets.

(C) Minor Arterial

Minor Arterials provide connections between major developments and neighborhoods and are best suited for roads with moderate speeds. Generally, these do not include streets that penetrate residential areas.

(D) Major Collector Street

A street classification that receives traffic from other collectors and distributes it to major activity centers. It may also feed through traffic to arterial streets, freeways, or expressways. Uses served include but are not limited to major educational facilities, concentrations of high density commercial,

regional commercial facilities, other concentrated commercial facilities, and industrial complexes. Some major collector streets are also arterial streets.

(E) Minor Collector Street

A street classification that carries traffic from residential streets to major collector streets. It typically serves uses such as medium and high density residential, limited commercial facilities, elementary schools, offices, and direct access to industrial parks.

(F) Local Road

A street classification that functions primarily to provide property access. They are normally short in length and compose the highest percentage of total street miles within the City. Local streets are designed to serve low traffic volumes. Through traffic movement should be discouraged.

(G) Downtown Street Types

Street classifications that reinforce a pedestrian-friendly environment and foster an enhanced sense of place within the Downtown area

(H) Private Street

A classification of streets that are owned and maintained by a homeowners' association or property owner's association, and that are not dedicated to the public.

(70) Street Improvements

Any street, together with all appurtenances required by City regulations to be provided with such street, and including but not limited to curbs and gutters, walkways (sidewalks), drainage facilities to be situated in the right-of-way for such street or thoroughfare, traffic-control devices, streetlights, and street signs, for which facilities the city will ultimately assume the responsibility for maintenance and operation.

(71) Street Length

The same as “Block Length.”

(72) Subdivider

A person who, having an interest in land, causes it, directly or indirectly, to be divided into a subdivision; directly or indirectly, sells, leases, or develops, or offers to sell, lease or develop, or advertises for sale, lease or development, any interest, lot, parcel, site, unit, or plot in a subdivision; or engages directly or through an agent in the business of selling, leasing, developing, or offering for sale, lease, or development, a subdivision or an interest, lot, parcel, site, unit, or plot in a subdivision.

(73) Subdivision (also known as “Addition”)

A division or re-division of any tract of land situated within the City's corporate limits or its extraterritorial jurisdiction into two or more parts, lots, or sites, for the purpose, whether immediate or future, of sale, division of ownership, or building development. “Subdivision” includes re-subdivisions of land or lots that are part of a previously recorded subdivision.

(74) Subdivision Improvement Agreement or SIA

A contract entered into by the applicant and the City, by which the applicant promises to complete the required public improvements within the subdivision or addition within a specified time period following final plat approval, and that may, to the extent expressed in the agreement, modify or alter the application of these subdivision regulations.

(75) Submission Date

The date when forms, fees, plans, information, and copies have been submitted to the Director of Development Services (or other employee authorized to receive applications) for the purposes of meeting requirements for a development application. The submission date is not the same as the completion filing date (see “Completion Filing Date”).

(76) Substandard Street

An existing street that does not meet the minimum specifications in the City's standard street specifications, and which is not constructed to the ultimate configuration for the type of street it is designated for on the City's Master Thoroughfare Plan.

(77) Surveyor

A registered professional land surveyor (RPLS), as authorized by state statutes to practice the profession of surveying.

(78) SWPPP

An acronym for a storm water pollution prevention plan (as in a set of engineering construction plans).

(79) TCEQ

The Texas Commission on Environmental Quality or any successor agency of the State of Texas.

(80) Temporary Improvements

Improvements built and maintained by the developer that are needed to remedy a circumstance that is temporary in nature, such as a temporary drainage easement or erosion control device, that will be removed upon completion of the subdivision or shortly thereafter.

(81) Thoroughfare

A street classified as a highway, or any type of arterial, or collector roadway.

(82) U.S. Army Corps of Engineers

The civil engineering branch of the U.S. government.

(83) Yard

The open area between building setback lines and lot lines.

(84) Zoning Ordinance

The City's zoning regulations as codified in Article 9.04 of this code as amended as well as zoning ordinances not codified in this code that zone or rezone particular tracts of property.

Section 9.02.017 through Section 9.02.040. (Reserved)

Division 2. PROCEDURES

Sec. 9.02.041. Introduction and Procedural Overview

The Subdivision Regulations of the City of Anna is designed to prepare land for development. Prior to submission of applications, a pre-application meeting is required. The purpose of the meeting is to review potential subdivision design before formal submittal. City of Anna engineering and planning staff will discuss stormwater impacts of the proposed development.

The process for gaining subdivision approval depends on the size and complexity of the subdivision. Minor subdivisions, which are subdivisions of four or fewer lots requiring no public improvements, may be approved by staff in a one-step process. Approval of major plats may involve from one to three steps depending on the nature of development. In addition, remainders of tracts being subdivided and parcels smaller than five acres but not proposed for improvement or development may in some instances be approved in a one-step process under the conveyance plat provisions of the ordinance. Some types of subdivisions are not regulated under this ordinance. These exempt subdivisions include divisions of property where no part being created is smaller than 20 acres, certain forms of leaseholds, and divisions created by the action of a court of law. However, no property may be developed without an approved plat, unless exempt as stated in Section 9.02.003. The general process of subdivision approval is described below. This description does not substitute for the actual regulations contained in Sections 9.02.020 – 9.02.027.

(a) Major Subdivision Approval Process

The approval process for a major subdivision typically begins with the preparation of a concept plan. This plan establishes a general schematic for the site development, primarily focusing on vehicular access and circulation. Concept plans may be used to separate large properties into parts for phasing site planning and development. A concept plan may be as simple as a plan defining the location of arterial or collector streets shown on the City's Thoroughfare Plan. However, a concept plan may also show the preliminary layout of local streets and lots. Approval of a concept plan showing the proposed street and lot layout is required prior to the submittal of a preliminary plat for a residential subdivision. Concept plans may be used to define a phasing plan for the development of property. In this case, areas proposed for immediate development will be more detailed than future phases of the development. Concept plans for multi-phased projects may be amended and refined as subsequent phases are ready to proceed through the subdivision approval process.

The approval of a preliminary plat is the second step in processing a major subdivision. The preliminary plat must generally conform to the approved concept plan for the property. The preliminary plat is a detailed, fully dimensional plat and engineered plan for the subdivision. Following the approval of the preliminary plat by the Commission and Council and the release of the engineering plans by the City Engineer, the developer may begin construction of the site improvements. The preliminary plat may not be filed with the County Clerk, nor may lots be sold with preliminary plat approval.

The final stage of the subdivision process is approval of the final plat. Once the improvements have been constructed, inspected, and approved for acceptance by the City Engineer, the final plat may be presented to the Commission for approval. All corrections and alterations to the plat are made prior to approval, thus eliminating the reasons for most replats. If improvements have not been completed or if minor corrections are needed, the developer and the City may enter into a subdivision improvement agreement, with a Commission recommendation and subsequent Council approval, specifying the work remaining and providing necessary surety for future performance. This agreement can be approved concurrent with a final plat, thereby allowing the plat to be filed and lots sold. If the developer elects to do so, he could enter into a development agreement with the City for all improvements. This would only be appropriate for small subdivisions, however.

(b) Minor Subdivision Approval Process

The ordinance provides a one-step process for minor plats. A minor plat is defined as a subdivision of four or fewer lots not requiring any public improvements. Minor plats can be processed for either residential or nonresidential subdivisions. Minor plats can be approved by staff without any action by the Commission.

(c) Conveyance Plats

The Subdivision Ordinance recognizes the need to subdivide and sell property without plans for its immediate development. In addition, a lot from a tract may be sold for development, leaving an unimproved remainder. A conveyance plat allows the recording of a subdivision without requiring the construction of public improvements. This alternative is an interim step in the subdivision process and may generally be used only where the parcels or lots being created are larger than five acres.

A conveyance plat is a boundary survey drawn as a plat. Easements, dedications, and reservations may be recorded on a conveyance plat. Engineering plans are not required to process a conveyance plat, unless the developer plans to construct limited improvements on the property. Development fees are not collected at the time of conveyance plat approval.

(d) Review Time

Conveyance plats, preliminary plats, replats, and final plats will be acted on within 30 days of filing. All plats not acted upon within this period will be considered approved. Certain minor plats may be processed in a shorter period, since they only require staff approval. (Division 1.Sec. 9.04.001(e)). All other approvals require approval by the Planning & Zoning Commission or City Council.

(e) Plat Signature

For Minor Plat approvals the signature on the plat shall be that of the Director of Development Services. Plats approved by the Commission will be signed of the Commission Chair. Plats approved by the City Council will be signed by the City Mayor.

(f) Appeals

The action of staff concerning a minor plat may be appealed to the City Council.

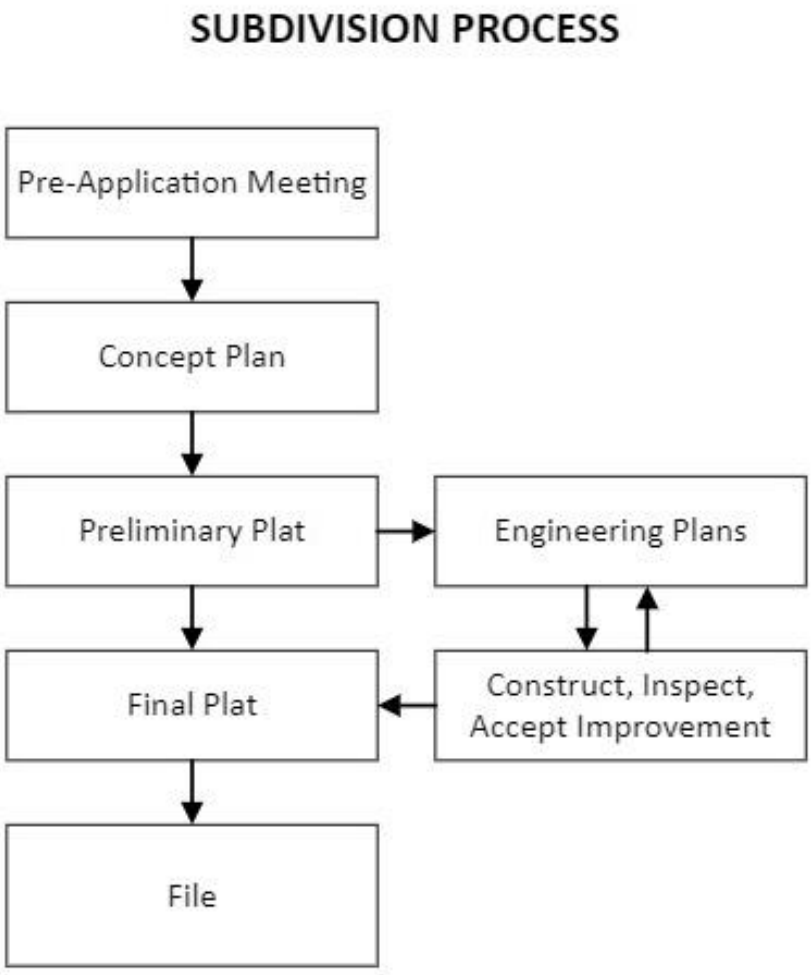

Sec. 9.02.042. General Requirements for Plats

(a) Zoning Requirements

(1) A property within the City's corporate limits that is being proposed for platting or development must be properly zoned by the City prior to submission of a development application. In addition, the proposed development layout or subdivision design shown on the proposed plat must be in conformance with all standards and requirements prescribed in the zoning ordinance and these subdivision regulations.

(2) Noncompliance with the requirements of the zoning district in which the subject property is located, or lack of the proper zoning, shall constitute grounds for denial of a development application.

(3) Any development application submitted for approval by the City shall be in accordance with the City's Zoning Ordinance, if the property is located within the City's corporate limits. For property located within the City's corporate limits or extraterritorial jurisdiction, any development application shall be in accordance with the City's Comprehensive Plan, including all adopted water, sewer, storm drainage, future land use, park, recreation, open space, and thoroughfare plans. All plats shall be prepared by a registered professional land surveyor (RPLS).

(b) Classification of Subdivisions and Additions.

(1) Before a plat relating to any tract of land is filed for record with the County Clerk, the property owner shall apply for and secure approval of the required subdivision plat from the Commission, in accordance with the following procedures, unless otherwise provided within these subdivision regulations. Subdivisions are classified as major or minor depending on the number of lots proposed and the extent of public improvements required.

(A) Minor subdivisions shall create no more than four lots and do not require the creation of a new street or the extension of municipal facilities. Minor subdivisions may be approved for residential and nonresidential properties. Conveyance plats may be approved under the procedure for minor subdivisions provided that they establish no more than four lots and do not require the creation of a new street or extend municipal facilities. Minor plat approval requires the submission of a final plat as described under Sec. 9.02.047 or the submission of a conveyance plat as described under Sec. 9.02.045. The Director of Development Services may approve minor plats or refer them to the Commission for their action, in accordance with Division 1.Sec. 9.04.001(e).

(B) Major subdivisions involve the creation of new streets, the extension of municipal facilities, or the creation of more than four lots. Major subdivisions may be approved for residential and nonresidential properties. Conveyance plats are considered major subdivisions if they create more than four lots or involve the creation of new streets or the extension of municipal facilities. The procedure for approving a major plat typically requires two steps: preliminary plat and final plat. A concept plan or preliminary site plan that contains sufficient information to provide for the proper coordination of the development may also be required.

(C) Except as otherwise permitted, the Commission’s approval of a preliminary plat is required prior to the construction of public improvements on or for the property. The preliminary plat and the associated engineering plans for the property may be amended during construction, with only major changes requiring reapproval by the Council.

(D) Upon completion of the required public improvements, or the provision of a subdivision improvement agreement as described in the definitions, the owner may submit a corrected final plat for the development. Lots may be sold and building permits obtained after approval of the plat by the Commission and filing of the signed plat. The preliminary plat process may be omitted if the owner enters into a subdivision improvement agreement with the City and provides sufficient surety for all proposed public improvements. If the preliminary plat process is omitted, engineering plans must be submitted in conjunction with the final plat.

(c) Submission Requirements for All Types of Plat Applications

In addition to the requirements outlined herein for each type of development application, the City may maintain separate policies and procedures for the submission and processing of applications including, but not limited to, application forms, checklists for information to be shown on plats, language blocks for plats, and other similar items. The forms and paperwork are available in the Planning Department. These policies and procedures may be amended from time to time by the Director of Development Services, and it is the applicant's responsibility to be familiar with, and to comply with, these policies and procedures.

(d) Application Processing for All Types of Plats

(1) Review of Plat for Completeness.

Every application for approval of a conveyance plat, minor plat, preliminary plat, final plat, or development plat shall be subject to a determination of completeness by the Director of Development Services. No application shall be accepted for processing unless it is accompanied by all materials and

information required by and prepared in accordance with the requirements of these subdivision regulations. The Director of Development Services from time to time may identify additional requirements for a complete application that are consistent with the application content requirements and related standards set forth in these subdivision regulations. The Director of Development Services may also promulgate a reasonable fee for review of the application for completeness not to exceed $500.00.

(2) Incompleteness as Grounds for Denial.

The processing of an application by any City official or employee prior to the time the application is determined to be complete shall not be binding on the City as the official acceptance of the application for filing, and the incompleteness of the application if not cured in accordance with this section shall cause the application to expire. A determination of completeness shall not constitute a determination of compliance with the substantive requirements of these subdivision regulations.

(3) Pre-Application Meeting

A property owner may request a pre-application meeting/pre-development meeting with the Planning Department for purposes of identifying requirements that are applicable to a proposed plat. The request shall be made in writing on a form prepared by the Planning Department and shall state that any proposed development concept discussed at the pre-application meeting/pre-development meeting is not intended as a plan of development or application for any type of approval.

(4) Time for Making a Determination

Following submission of a plan of development or plat application, the Director of Development Services shall make a determination in writing whether the plan or application constitutes a complete application for a conveyance plat, preliminary plat, replats, or a final plat not later than the 12th business day after the date the application is submitted. If the Director of Development Services determines that an application is incomplete, the written determination shall specify the documents or other information needed to complete the application and shall state the date the application will expire if the documents or other information is not provided.

(5) When Deemed Complete

An application for approval of a plat application filed shall be deemed complete on the 12th business day after the application has been received if the applicant has not been notified that the application is incomplete in accordance with this section.

(6) Time for Completing Application

If an applicant is timely notified that an application is incomplete, and the applicant fails to submit all materials and any other information specified in the Director of Development Services written determination on or before the 19th day after the application is submitted to the Director of Development Services for processing the application in accordance with his or her written notification, the application will be deemed to have expired and it will be returned to the applicant together with any accompanying documents. Thereafter, a new application for approval of the plat must be submitted. The City may retain any fee paid for reviewing the application for completeness.

In accordance with the Texas Local Government Code Chapter 212, the municipal authority responsible for approving plats shall approve, approve with conditions, or disapprove a plan or plat within thirty (30) days after the date the plan or plat is filed.

(7) Sequence of Applications

Notwithstanding any other provision of these subdivision regulations to the contrary, an application for a conveyance plat, preliminary plat, or final plat shall not be considered complete unless accompanied by a copy of the Zoning Ordinance or other certification verifying that the proposed use, lot sizes and lot dimensions for which the application is submitted are authorized by the zoning district in which the property is located.

(8) Vested Rights

No vested rights accrue solely from the filing of an application that has expired pursuant to this section, or from the filing of a complete application that is subsequently denied. No vested rights accrue based on a filing that does not provide fair notice of the project and the nature of the permit sought.

(e) Submission Procedures and City Review Process for All Types of Plats

(1) Submission Timing

In order to provide the City with adequate time to review plat applications for compliance with these subdivision regulations, an application for approval of any plat shall be submitted to the Director of Development Services during an application submission window that is at least 25 calendar days, but no more than 30 calendar days prior to the Commission regular meeting at which it is to be considered. The Director of Development Services may establish a deadline for the submission of plat applications that falls within the application submission window. Submission of an application outside the application submission window or after the application submission deadline, shall be grounds for denial of approval of the plat, unless the applicant agrees in writing that the date of filing of the plat shall be deemed to have occurred not more than 29 days prior to the next regular meeting of the Commission that follows a determination by the Director of Development Services that the application is complete.

(2) Submission Materials

The application shall include the following materials, which shall be submitted to the Director of Development Services (or such persons authorized by the planning department to accept applications) for review in order for the application to be deemed complete.

(A) A written application form that bears the original signature(s) of the property owner(s) of the subject property.

(B) The appropriate submission fee.

(C) The appropriate number of full-size sets as stated on the application form (available at the planning department) of full-size folded prints of the plat, as required by the City's current development review policies and requirements, and one black-and-white reduction of the plat. The size and number of these prints and reductions shall be determined by the Director of Development Services.

(D) A copy of any applicable development agreement pertaining to the subject property.

(E) If an application for approval of a final plat, a tax certificate from the Collin County tax assessor-collector showing that all taxes have been paid on the subject property, and that no delinquent taxes exist against the property, as shown in the Collin County deed records. Documentation shall also be included that shows no delinquent assessments, fees, or other debts or obligations to the City and which are directly attributable to the subject property.

(F) An engineer's summary report which describes, in as much detail as necessary, the following:

(i) The overall nature and scope of the proposed development, including zoning of the property, proposed use(s) and acreage of each proposed use, minimum lot sizes, average lot size, widths, and depths, number of lots to be created, and special amenities or facilities that will be included in the development;

(ii) How the property will be served with required utilities and services;

(iii) How storm water drainage will be handled; and

(iv) An itemization and description of any waivers/suspensions from provisions of these subdivision regulations that will be sought.

(G) Construction plans prepared by a professional engineer for all of the infrastructure and site improvements required to serve the development (required only with the final plat application).

If located within the City's ETJ, letters shall also be provided from each of the applicable utility service providers, including water, wastewater, gas, electricity, telephone, cable TV, and solid waste, verifying their ability to provide an adequate level of service for the proposed development.

(H) Proof of land ownership as required in Subsection (f) of this section.

(3) Other Submission Requirements

(A) All plat drawings and other corresponding plans and drawings, including engineering plans and landscape and screening plans, shall be drawn to a standard engineering scale of no more than 100 feet to the inch (1" = 100'). In cases of large developments which would exceed the dimensions of the sheet at 100-foot scale, plats may be on multiple sheets and in a format that will be acceptable for eventual filing at Collin County. If there are multiple sheets, then a key sheet is required.

(B) Other applicable information and materials may be deemed appropriate by the City, and therefore may be required by the City. Such materials must also be submitted for an application to be determined as complete.

(C) All of the materials and plans specified within this Subsection (e) shall be submitted to the Director of Development Services for review in order for the application to be deemed complete.

(4) City Staff Review

Upon official submission of an application for plat approval, the City shall commence technical review of the development proposal by forwarding a copy of the application and plat to appropriate personnel from various City department and may include representatives of the Anna Independent School District (AISD), franchised utility companies, and TXDOT.

(A) City staff shall review the plat application and shall ascertain its compliance with these and other applicable City regulations.

(B) Following City staff review of the plat and supporting documents, and following discussions with the applicant on any revisions deemed advisable and the kind and extent of improvements to be installed, the applicant shall re-submit additional copies of the corrected plat (and engineering plans, if applicable) to the planning department no later than seven days prior to the Commission meeting (or other deadline established by the planning department) for final staff review.

(5) Re-Submission and Scheduling

(A) Failure to re-submit corrected copies of the plat and other application materials (including engineering plans, if applicable) back to the City in time for adequate review prior to the Commission

meeting shall be cause for the Planning Department to forward the plat application to the Commission as it was originally submitted rather than the corrected version of the plat unless the applicant agrees in writing that the date of filing of the plat application shall be deemed to have occurred not more than 29 days prior to the next regular meeting of the Commission that follows a determination by the Director of Development Services that the application is complete. In accordance with Chapter 212 of the Texas Local Government Code, the applicant is limited to one thirty (30) day extension.

(B) If, upon re-submission of the corrected plat to the City, the Director of Development Services determines that the application does not comply with the technical requirements of the subdivision regulations, the plat application may be subject to expiration or denial in accordance with these subdivision regulations.

(C) After the plat has been scheduled on an agenda (or at any time prior), the applicant may request, in writing, to withdraw official filing of the plat in order to allow the applicant more time to correct deficiencies, address concerns, or otherwise improve the plat pursuant to these subdivision regulations. After receipt of the request, the City may delay action on the plat until 30 days after the applicant officially re-files the plat.

(6) Action by the Commission

All major plat applications that have not expired shall be reviewed by the Commission and upon finding that the plat is in complete conformance with the provisions of these subdivision regulations and with all other applicable regulations of the City, the Commission shall approve the plat.

(A) The Commission shall review each plat application and shall take action to either approve the plat application or approve the plat application subject to certain conditions, or vote to deny the plat application, within 30 calendar days following the completion filing date.

(B) The Commission shall approve or deny the plat application by a simple majority vote of the Commission members present and voting.

(C) If the Commission denies a plat application, the commission shall state such disapproval and the reasons therefor. The Commission's decision to deny a plat may be appealed to the City Council by the applicant or by the City Manager.

(f) Proof of Land Ownership

The City requires proof of land ownership prior to approval of any development application involving real property. Along with the application submission, the applicant shall provide evidence that he/she is the owner of record of the subject land parcel or parcels, or is the property owner's authorized agent. The Planning Development department shall have the authority to determine what document(s) the City will require to prove ownership, such as a letter of title guarantee from a licensed attorney, title policy, title commitment, or some other documentation that is acceptable to the City Attorney. If ownership cannot be conclusively established prior to the meeting date on which the development application will be heard, the City shall have the authority to deny the application on the basis of protecting the public interest. All owners and other persons, including any lienholders, whose consent is necessary to the effective dedication of the plat shall sign the owner's certificate before a final plat is filed for record with the County Clerk.

(g) Conveyance Plat Expiration

An approved conveyance plat shall expire and shall thereafter be deemed null and void if the conveyance plat has not been recorded as required in Sec. 9.04.044(c)(5)(A) within six months from the date of the

Commission's approval of the conveyance plat. Upon expiration, a new conveyance plat application shall be required to submitted, subject to requirements in effect at the time the new application is filed with the City.

(h) Preliminary Plat Expiration and Extension

(1) Expiration

An approved preliminary plat shall expire and shall thereafter be deemed null and void if a final plat application for all the land subject to the preliminary plat has not been approved within two years from the date of the Commission's approval of the preliminary plat. Any subsequent expiration of the final plat shall also result in expiration of the preliminary plat for the same land. Upon expiration, or upon denial of a timely submitted request for extension of plat approval, a new preliminary plat application shall be required to be submitted, subject to requirements in effect at the time the new application is filed with the City.

(2) Extension

The Commission may extend a preliminary plat for a period not to exceed one year on the written request of the applicant. The request must be filed before the preliminary plat expires and must document the reasons for the extension. In determining whether to grant a request, the Commission shall take into account the reasons for the requested extension, the ability of the applicant to comply with any conditions attached to the original approval, whether extension is likely to result in timely completion of the project, and the extent to which any newly adopted regulations should be applied to the proposed development. In granting an extension, the Commission may impose such conditions as are needed to assure that the land will be developed in a timely fashion and that the public interest is served, including compliance with one or more newly adopted development standards.

(i) Construction Plans Expiration and Extension

(1) Expiration

Approved construction plans (and engineering plans, if required) for public improvements shall be valid for a period of two years from the date of final plat approval after which they shall expire and shall be deemed null and void. Upon expiration, or upon denial of a timely submitted request for extension of the approval of the construction plans, new construction plans shall be submitted, subject to requirements in effect at the time the construction plans are filed with the City.

(2) Extension

The City Council may extend the approval of construction plans (and engineering plans, if required) for public improvements for a period not to exceed one year on the written request of the applicant. The request must be filed before the construction plans expire and must document the reasons for the extension. In determining whether to grant a request, the Council shall take into account the reasons for the requested extension, the ability of the applicant to comply with any conditions attached to the original approval, whether extension is likely to result in timely completion of the project, and the extent to which any newly adopted regulations should be applied to the proposed development. In granting an extension, the Commission and Council may impose such conditions as are needed to assure that the land will be developed in a timely fashion and that the public interest is served, including compliance with one or more newly adopted development standards.

(j) Plat Expiration and Extension

(1) Expiration

An approved final plat shall expire and shall thereafter be deemed null and void if the final plat has not been recorded as required in Sec. 9.04.046(i) within six months from the date of the Commission's approval of the final plat. Upon expiration, or upon denial of a timely submitted request for extension of plat approval, a new preliminary plat application shall be required to submitted, subject to requirements in effect at the time the new application is filed with the City.

Sec. 9.02.043. Expiration Of Permits, Generally, Dormant Projects, and Exemptions from Vesting

(a) Expiration of Individual Permits

If, after approval of any individual permit, no progress has been made towards completion of the project within two years of the approval of the permit, the permit shall expire and become null and void except to the extent otherwise expressly provided for in these subdivision regulations.

(b) Dormant Project

A project shall become dormant and expire and all permits previously issued in connection with the project shall be null and void if, on the fifth anniversary of the date the first permit application was filed, no progress has been made towards completion of the project. The phrase “progress towards completion of the project” or similar phrase as used in this section includes the activities constituting such progress as set forth in Texas Local Government Code Section 245.005.

(c) Effect of Expiration or Dormant Project

Following the expiration of a permit or a project, any new application shall be a wholly new and separate permit or project as compared with the dormant project that expired, and shall be subject to the regulations, rules, ordinances, and other laws in effect at the time of filing of the new application and shall further be subject to the assessment of new fees to the fullest extent permitted by law.

(d) Projects, Permits, and Other Activities that never Vest Rights

Notwithstanding any other provision of these subdivision regulations or other City rules, regulations or ordinances, the following are exempt from and not affected by any claim to vested rights:

(1) A permit that is at least two years old, is issued for the construction of a building or structure intended for human occupancy or habitation, and is issued under laws, ordinances, procedures, rules, or regulations adopting only:

(A) Uniform building, fire, electrical, plumbing, or mechanical codes adopted by a recognized national code organization; or

(B) Local amendments to those codes enacted solely to address imminent threats of destruction of property or injury to persons;

(2) The City's zoning regulations that do not affect landscaping or tree preservation, open space or park dedication, property classification, lot size, lot dimensions, lot coverage, or building size or that do not change development permitted by a restrictive covenant required by the City;

(3) Regulations for sexually oriented businesses;

(4) Fees imposed in conjunction with development permits, including but not limited to impact fees;

(5) Regulations for annexation that do not affect landscaping or tree preservation or open space or park dedication;

(6) Regulations for utility connections;

(7) Regulations to prevent imminent destruction of property or injury to persons from flooding that are effective only within a floodplain established by a federal flood control program and enacted to prevent the flooding of buildings intended for public occupancy;

(8) Construction standards for public works located on public lands or easements; or

(9) Regulations to prevent the imminent destruction of property or injury to persons if the regulations do not:

(A) Affect landscaping or tree preservation, open space or park dedication, lot size, lot dimensions, lot coverage, building size, residential or commercial density, or the timing of a project; or

(B) Change development permitted by a restrictive covenant required by a municipality.

Sec. 9.02.044. Conveyance Plats

(a) Purpose

A conveyance plat may be used solely for the purpose of subdividing land and the recording of same, or recording a single existing lot or parcel created by other means. A conveyance plat may be used to convey the property or interests therein; however, a conveyance plat does not constitute approval for development of the property and is not intended for immediate development. A conveyance plat is an interim step in the subdivision and development of land.

(b) Applicability

Conveyance plats may be used in lieu of a final plat to record the subdivision of property in the following instances:

(1) To record the remainder of a tract larger than five (5) acres created by the final platting of a portion of the property provided that the remainder is not intended for immediate development.

(2) To record the subdivision of property into parcels five (5) acres or smaller in size that are not intended for immediate development, and where all public improvements exist prior to approval and minimum frontage requirements are met. All public rights-of-way must be dedicated and all abutting streets and utilities must be installed and accepted by the City. Installation of onsite improvements may be deferred, in accordance with Division 1.Sec. 9.04.004(f)(2), if development of other tracts is not affected.

(c) Application Procedure and Requirements

(1) Pre-Application Meeting

Before preparing the conveyance plat, the applicant shall schedule an appointment for a pre-application meeting with the staff of the Planning and Engineering Departments. The purposes of the pre-application meetings are to review the proposed development with regard to stormwater impacts, to discuss the procedures for approval of the plat and the requirements as to general layout of streets and/or reservations of land, street improvements, drainage, sewerage, fire protection, and similar matters, as well as the availability of existing services; and to discuss application procedures and submittal requirements.

(2) Application Requirements

The Director of Development Services may establish—not inconsistent with this Article—forms and standards with regard to the content, format, and graphics for conveyance plats. The proposed conveyance plat shall show information as specified on a form or packet provided by the Planning Department.

(3) Standard for Approval

(A) Access

All tracts, parcels, lots, or sites created by a conveyance plat shall have frontage and access to an existing or proposed public street or an existing standard street meeting City construction standards and accessing the existing City street system.

(B) Reservation of Rights-of-Way

Conveyance plats must provide for the reservation of future rights-of-way of planned roadways. Right-of-way reservation acknowledges the future obligation to dedicate right-of-way for public thoroughfares and streets specified on the City's Thoroughfare Plan or on an approved concept plan. Reservation of right-of-way does not grant any right or interest in the property to the City or other entity. The final alignment may be adjusted upon final platting in order to meet engineering design standards.

(C) Dedication of Rights-of-Way

Dedication of right-of-way shall be required where a conveyance plat is used to record the remainder of a tract created by the final platting of a portion of the property. The required right-of-way dedication shall be limited to that which is necessary to provide access to the property proposed for final plat approval and to complete turn lanes, intersections, and transitions in road pavement width resulting from development of the property proposed for final plat approval.

(4) Approval Procedure

A conveyance plat meeting all the requirements of the City shall be placed on the consent agenda of the Commission. Conveyance plats shall be approved provided they comply with all appropriate ordinances and the Comprehensive Plan. The Commission must approve, conditionally approve, or deny a conveyance plat no later than thirty (30) calendar days following the official submission date. If denied, the Commission shall provide a written explanation of the reason for denial. If the Commission fails to approve or deny the application within thirty (30) calendar days following the official submission date, the conveyance plat shall be deemed approved. A conveyance plat qualifying as a minor plat shall be reviewed and acted upon by the Director of Development Services, or by the Commission and Council if deferred by the Director, in accordance with Division 1.Sec. 9.04.001(e).

(5) Signing and Filing

(A) After the approval of the conveyance plat by the Commission, and the correction of the conveyance plat if required by the Commission, the property owner shall be responsible for filing the plat with the applicable County. The property owner may request a delay of filing the approved conveyance plat for up to six (6) months following the date of approval. Any conveyance plat which has not been filed with the County within six (6) months following the date of approval shall be void. Prior to filing with the County, the property owner may withdraw and void a conveyance plat. Any conveyance plat withdrawn and/or voided, must be later resubmitted as a new project under then-current regulations and procedures and reapproved by the Commission and filed with the County. Prior to filing, the

Mayor shall endorse approval of the conveyance plat. One (1) copy of the recorded conveyance plat shall be returned to the Director of Development Services within seven (7) calendar days following its filing at the applicable county. Failure to record the conveyance plat and to submit a copy of the recorded plat to the Planning Department, within the respective time frames above, shall be deemed a violation pursuant to Sec. 9.04.042(g) of these regulations. The City shall have the right, but not the obligation, to cause an approved conveyance plat to be recorded with the applicable County.

(B) No final plat processed and approved in association with a conveyance plat shall be filed without the concurrent filing of the associated approved conveyance plat.

(6) Effect

(A) Conveyance plat approval and acceptance by the City does not relieve the owner from obligations, including fees, required by other sections of this or other ordinances of the City pertaining to the improvement of the property or extension of services as required to make the property suitable for development.

(B) Neither reservation nor dedication of rights-of-way shall relieve the property owner from obligations for street construction or assessments associated with public street improvement programs. Easements for access, utilities, and drainage may be recorded on conveyance plats.

(C) Final Platting Requirements

(i) No building permits shall be issued nor permanent utility service provided for land which has only received approval as a conveyance plat. Notwithstanding the above, the Director of Development Services and City Engineer may authorize temporary building permits, temporary occupancy permits, and temporary utility service.

(ii) A conveyance plat may be superseded by a preliminary plat or final plat in total or in part through compliance with the procedures and requirements of this ordinance.

(d) Conveyance Plat Approval Process

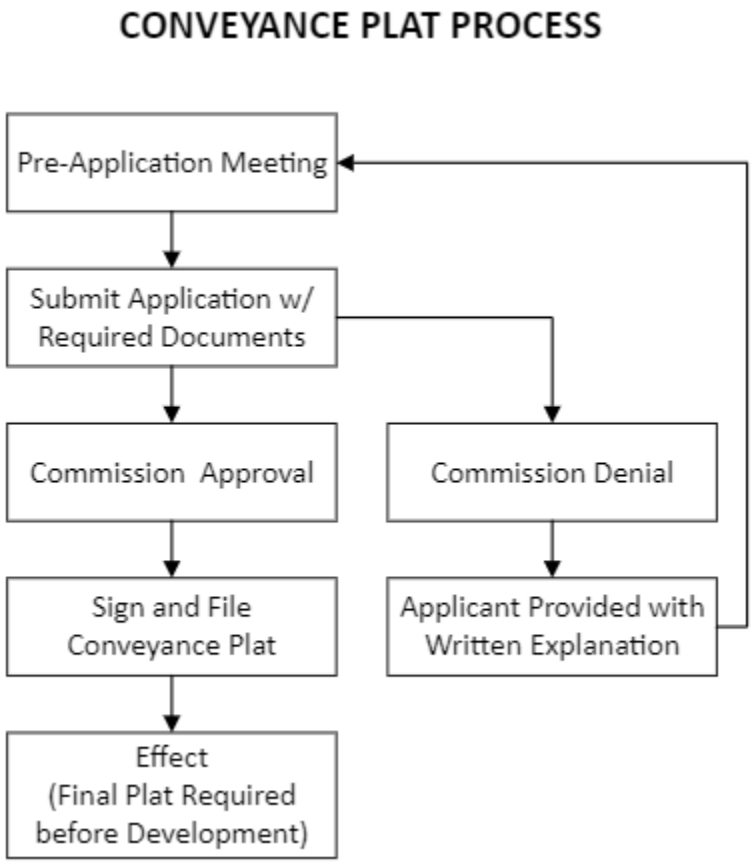

Sec. 9.02.045. Preliminary Plats

(a) Purpose

The purpose of the preliminary plat is to allow the Commission to evaluate the proposed plat for conformity with requirements and conditions identified at the time of concept plan, preliminary site plan, or conveyance plat approval and to evaluate construction plans for public improvements or to provide adequate security for construction of the same.

(b) Applicability

A preliminary plat is required for all major subdivisions prior to the construction of public improvements. If a preliminary plat is omitted, a final plat shall be required in conformance with Sec. 9.02.046.

(c) Generally

The applicant shall prepare a preliminary plat which shall include a utility layout and plans for the construction of the subdivision and all associated public improvements, together with other supplementary materials as required by these subdivision regulations or by the City.

(d) Preliminary Plat Contents, Generally

The Director of Development Services may establish—not inconsistent with this Article—forms and standards with regard to the content, format, and graphics for preliminary plats. The proposed preliminary plat shall show information as specified on a form or packet provided by the Planning Department.

(e) Approval, Generally

Approval of a preliminary plat by the Commission shall be deemed general approval of the street and lot layout shown on the preliminary plat, and shall not constitute acceptance or approval of the final plat.

(f) Application Procedure, Requirements, and Information Required upon or with Preliminary Plat

The Director of Development Services may establish—not inconsistent with this Article—forms and mandatory standards with regard to the content, format, and graphics for preliminary plats. The applicant shall file for approval of a preliminary plat, which conforms substantially with the concept plan, preliminary site plan, or conveyance plat submitted by the applicant. The plat shall be prepared by or under the supervision of a registered public surveyor in the State of Texas and shall bear his/her seal, signature, and date on each sheet. The payment of all applicable fees shall be required at the time of submission.

(1) Pre-Application Meeting

Before preparing the preliminary plat, the applicant shall schedule an appointment and meet with the staff of the Planning and Engineering Departments. The purposes of the pre-application meetings are to review the proposed development with regard to stormwater requirements (see Sec. 9.02.041; to discuss the procedures for approval of the plat and the requirements as to general layout of streets and/or reservations of land, street improvements, drainage, sewerage, fire protection, and similar matters, as well as the availability of existing services; and to discuss application procedures and submittal requirements.

(2) Timing of Public Improvements

(A) After approval of;

(i) The preliminary plat by the Commission;

(ii) Construction/Engineering plans by the City Engineer; and

(iii) Following procurement of all applicable permits from other appropriate agencies (such as TxDOT, railroad authorities, TCEQ, U.S. Army Corps of Engineers, FEMA and/or Collin County), the applicant shall cause a contractor(s) to install or construct the public improvements in accordance with the approved plans and the City's design standards and at the applicant's expense.

(B) The applicant shall employ professional engineers, professional registered land surveyors or other professionals as necessary to design, stake, supervise, perform, and complete the construction of such improvements, and shall cause his/her contractor to construct the said improvements in accordance with any approved construction plans and engineering plans, and with the City's design standards, and any other applicable agency's design standards. To the extent of any direct conflict between the foregoing requirements, the approved construction plans and engineering plans shall prevail.

(C) If the project will require a FEMA revision to a flood insurance rate map or other submittal required under the National Flood Insurance Program, or if the project otherwise triggers review under the City's flood damage prevention regulations set forth in this code at Article 4.12, then the application must be reviewed for compliance with said standards and requirements prior to approval of the final

plat and prior to any construction activities (including but not limited to grading, clearing, grubbing, brush removal, etc.) on the site.

(3) Approval Procedure

After review of the preliminary plat, the report and recommendations of the Director of Development Services concerning the preliminary plat and the application, the report and recommendation of the City Engineer on the construction plans, and any exhibits submitted at a public meeting, the applicant shall be advised of any required changes and/or additions. The Commission shall approve or disapprove the preliminary plat. One (1) copy of the proposed preliminary plat shall be returned to the owner with the date of approval, conditional approval or disapproval, and the reasons therefore accompanying the plat. If the Commission disapproves the proposed preliminary plat, the applicant may execute an appeal in the manner prescribed in Division 1.Sec. 9.04.011(e)

(4) Effect of Approval

Approval of a preliminary plat by the Commission constitutes authorization for the City Engineer to release construction plans subject to his/her final approval and for the City Engineer to authorize for the property owner to commence grading of the site and construction of such public improvements as are required by the Commission. Approval of a preliminary plat also authorizes the property owner, upon fulfillment of all requirements and conditions of approval, to submit for approval an application for final plat approval. Upon release of the construction plans, the City Engineer may, upon request of the applicant, issue a certificate indicating the construction plans have been released and construction of the improvement is thereafter authorized. Additional certificates may be issued by the City Engineer authorizing the construction of private utilities on a phased schedule. The certificate shall read as follows:

"The preliminary plat for (insert name of the subdivision or addition) as approved by the City of Anna Commission on (insert date of approval) is authorized for use with engineering plans for the construction of public improvements as approved by the City Engineer. A final plat shall be approved by the Commission upon the completion of all public improvements or the provision of a subdivision improvement agreement under the terms of the Subdivision Ordinance and submission of a final plat in compliance with Sec. 9.02.046 of the Subdivision Ordinance of the City of Anna."

Zoning regulations that affect exterior appearance of a single-family house or the landscaping of a single-family lot and that are adopted after approval of a preliminary plat for a single-family residential development, shall not apply for a period of two (2) years following the latter of the date of plat approval or the date of the acceptance of public improvements related to the plat.

(5) Lapse of Preliminary Plat Approval

The approval of a preliminary plat shall be effective for a period of two (2) years following the date that the preliminary plat is approved by the Commission, at the end of which time the applicant must have submitted and received approval for a final plat. If a final plat is not submitted and approved within two (2) years, the preliminary plat approval shall be null and void, and the applicant shall be required to submit a new plat for review subject to the then-existing zoning restrictions and subdivision regulations.

(g) Standards for Approval

No preliminary plat shall be approved by the Commission unless the following standards have been met:

(1) The plat substantially conforms with the approved concept plan, preliminary site plan, or conveyance plat.

(2) The construction plans have been reviewed by the City Engineer.

(3) Provision for installation and dedication of public improvements has been made.

(4) The plat conforms to applicable zoning and other regulations.

(5) The plat meets all other requirements of these regulations.

(h) Construction Plan Procedure and Requirements

(1) General Application Requirement

Construction/Engineering plans shall be prepared by or under the supervision of a professional engineer or architect registered in the State of Texas as required by state law governing such professions. Plans submitted for review by the City shall be dated and bear the responsible engineer's or architect's name, serial number, and the designation of “engineer,” “professional engineer,” or “P.E.” or “architect” and an appropriate stamp or statement near the engineer's or architect's identification, stating that the documents are for preliminary review and are not intended for construction. Final plans acceptable to the City shall bear the seal and signature of the engineer or architect and the date signed on all sheets of the plans. Public works construction in streets, alleys, or easements that will be maintained by the City shall be designed by a professional engineer registered in the State of Texas.

(A) Engineering Plans

The applicant shall submit the required number of sets of the complete engineering or construction plans that have been approved by the City Engineer for all streets, alleys (if any), storm sewers and drainage structures, water and sanitary sewer facilities, screening and retaining walls, landscaping, and irrigation, and any other required public improvements for the area covered by the preliminary plat. Engineering plans shall be in conformance with the design standards and with the requirements set forth within these subdivision regulations. The engineering plans shall also contain any plans deemed necessary to show or document compliance with any other applicable codes and ordinances of the City that are related to development of a land parcel. The engineering plans shall show information as specified on an application form or packet provided by the City Engineer.

(2) Construction Plan Review Procedure

Copies of the construction plans, and the required number of copies of the plat shall be submitted to the City Engineer for final approval. The plans shall contain all necessary information for construction of the project, including screening walls, permanent BMPs, and other special features. All materials specified shall conform to the Engineering Construction Standards of the City. Each sheet of the plans shall contain a title block including space for the notation of revisions. This space is to be completed with each revision to the plan sheet and shall clearly note the nature of the revision and the date the revision was made. The City Engineer will release the plans for construction, after approval of the preliminary plat by the Commission and payment of all inspection fees. Upon such release, each Contractor shall maintain one set of plans, stamped with City release, on the project at all times during construction. This procedure shall also apply to approval of a final plat, if a preliminary plat is omitted. (Also see Sec. 9.02.046)

(3) Failure to Commence Construction

If construction has not commenced within one (1) year after approval of the plans, resubmittal of plans may be required by the City Engineer for meeting current standards and engineering requirements.

(i) Revisions to Approved Preliminary Plat

(1) Minor revisions to the preliminary plat are commonly required before the final plat is approved. Such minor revisions may include slight enlargement or shifting of easements or lot lines, addition of private or franchise utility easements, correction of bearings or distances, correction of minor labeling errors, addition of erroneously omitted informational items and labels, etc., and such revisions may be

delineated on the final plat without having to re-approve the preliminary plat. Whether or not revisions are “minor” in nature shall be determined by the Director of Development Services and/or City Engineer.

(2) Major revisions, if required, such as obvious reconfiguration of lot lines or easements, relocation of driveways or access easements or fire lanes, any modification to the perimeter or boundary of the property, and relocation or addition or deletion of any public improvement (including corresponding easement), shall necessitate re-submission and re-approval of the plat as a “revised preliminary plat”. The procedures for such re-approval shall be the same as for a preliminary plat. If an application for a revised preliminary plat expires due to failure to submit a complete application, or if the revised preliminary plat is complete, and considered by the Commission and is denied, the previously submitted preliminary plat(s) shall also be deemed to have been denied thus necessitating submission of a new application governed by the regulations, rules and other laws in effect at the time of the submission of the new application.

Preliminary Plat Approval Process Flowchart[1]

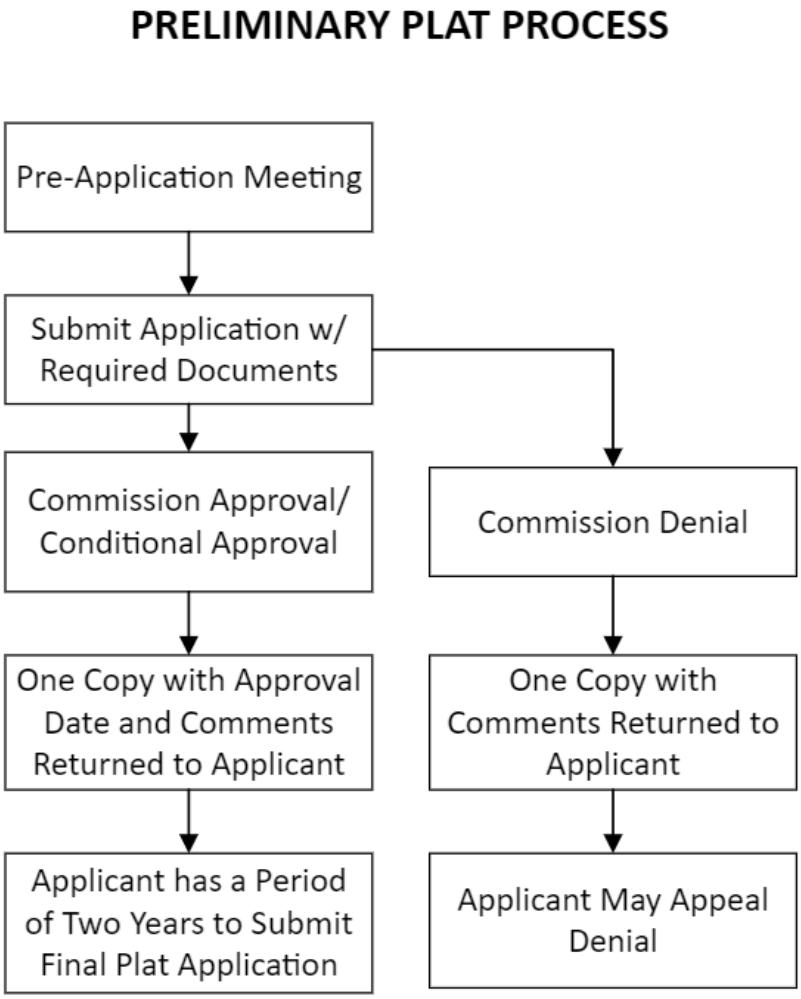

(a) [1] Waiver Procedures

(1) A petition for a waiver, suspension, or amendment shall be submitted in writing to the City Manager or the City Manager's designee by the property owner before the plat is officially filed and submitted for the consideration by the Commission. The petition shall state fully the grounds for the application, and all of the facts relied upon by the petitioner.

(2) All waivers/suspensions shall be approved or disapproved by the Commission.

(3) All waivers/suspensions shall have final approval or disapproval by the City Council.

Sec. 9.02.046. Final Plats

(a) A final plat for minor subdivisions may be approved by the Director of Development Services in accordance with Division 1.Sec. 9.04.001(e). The final plat shall be in accordance with the preliminary plat, as approved, and shall incorporate all applicable conditions, changes, directions, and additions imposed by the Commission upon the preliminary plat. The final plat shall not be submitted prior to approval of the preliminary plat (when required).

(b) Only final plat applications that include the required data, completed application form, submission fee, number of copies of the plat, record drawings, approved engineering construction plans, and other required information will be considered complete, shall be accepted for filing by the City, and shall be scheduled on a Commission agenda. Incomplete final plat applications will not be accepted for filing and will not be scheduled on a Commission agenda until the proper information is provided to City staff.

(c) Information Required upon or with Final Plat

The Director of Development Services may establish—not inconsistent with this Article—forms and standards with regard to the content, format, and graphics for final plats. The proposed final plat shall show information as specified on a form or packet provided by the Planning Department.

(d) Standards for Approval

No final plat shall be approved by the Commission unless the following standards have been met:

(1) The plat substantially conforms with the approved preliminary plat, as revised if revisions were a necessary condition for approval, and other studies and plans, as applicable; and

(2) The plat and accompanying documents conform to these subdivision regulations, the comprehensive plan, and applicable zoning, subdivision and any other applicable codes or ordinances of the City that are related to development of a land parcel.

(3) Required public improvements have been constructed and are ready to be accepted, and/or an improvement agreement has been accepted by the City, providing for the subsequent completion of improvements.

(4) Provision has been made for adequate public facilities under the terms of this ordinance.

(e) Timing of Public Improvements

(1) When all of the public improvements have been constructed and a request is made for acceptance of same by the City, the City Engineer shall confirm that the public improvements have been completed in accordance with the approved plans and specifications and with all applicable City standards and regulations, and shall confirm receipt by the City of the required maintenance bond. In determining compliance, the City Engineer shall obtain from the applicant: one sealed set of “as-built” or “record drawing” and a digital copy of all plans (in a format as determined by the City Engineer); a signed letter bearing sealed certification by the design engineer confirming the contractors' compliance with these subdivision regulations, and with all City construction standards set forth in the design standards and other applicable City design documents; and certification signed by the property owner before a notary that all dedications required for the public improvements have been fully conveyed. After said materials are received, and the City Engineer confirms compliance as set forth above, the City Engineer shall inform the City Manager of same and the City Manager shall receive and accept for the City the title, use, and maintenance of the public improvements.

(A) The Commission may require that all public improvements be installed, offered for dedication, and ready for acceptance by the City prior to the approval of the final plat by the Commission and signing of the final plat.

The Commission may permit or require the deferral of the construction of public improvements if in its judgment, deferring the construction would not result in any harm to the public, or offer significant advantage in coordinating the site's development with adjacent properties and offsite public improvements. Any required public improvement(s) approved for deferred construction must be provided for prior to the approval of the final plat. (See Division 1.Sec. 9.04.004(f)(2).)

(B) If the Commission does not require that all public improvements be installed, offered for dedication and accepted by the City prior to the signing of the final plat by the Chairman, it shall require that the applicant execute an improvement agreement and provide security for the agreement as provided in Section 9.02.018. This Subdivision Improvement Agreement will require final Council approval.

(C) This procedure shall also apply to the approval of a final plat if the preliminary plat is omitted.

(f) Approval Procedure

After review of the final plat, the Director of Development Services shall place the final plat for consideration on the agenda of a public meeting of the Commission. Minor plats may be approved by the Director of Development Services or referred to the Commission in accordance with Division 1.Sec. 9.04.001(e). In the event of disapproval, reasons for disapproval shall be stated. One (1) copy of the final subdivision plat shall be returned to the applicant with the date of approval, conditional approval, or disapproval noted on the final plat, and, if the final plat is disapproved, the reasons for disapproval accompanying the final plat.

(g) Effect of Approval and Acceptance of Improvements

As soon as is practical after the final plat has been approved by the City for recordation in accordance with Subsection (d) of this section, or, alternatively, approved for recordation because the subdivider has provided sufficient security in accordance with Division 6 of this Article, the Director of Development Services or designee shall direct the applicant to file the final plat to be recorded with the Collin County Clerk. No conveyance or sale of any portion or lot of the property may occur until after the final plat is approved by the Commission and duly recorded by the applicant. It is the applicant's responsibility to confirm that the final plat has been duly recorded, and an applicant's failure to confirm same is at the applicant's sole risk.

(h) Revisions to Approved Final Plat prior to Filing at the County

(1) Occasionally, minor revisions are needed before the final plat can be recorded. Minor revisions such as correction of bearings or distances, correction of minor labeling errors, addition of erroneously omitted informational items and labels, etc., may occur on the record plat prior to filing it without the Commission having to re-approve the final plat. Whether or not revisions are “minor” in nature shall be determined by the Director of Development Services. Major revisions, such as obvious corrections or reconfiguration of lot lines or easements, relocation of driveways or access easements or fire lanes, any modification to the perimeter or boundary of the property, and relocation or addition or deletion of any public improvements (including corresponding easement), shall necessitate re-submission and re-approval of the plat as a “revised final plat” unless otherwise approved by the Director of Development Services, as applicable. The procedures for such re-approval shall be the same as for a final plat. If an application for a revised final plat expires due to failure to submit a complete application, or if the revised final plat is complete, and considered by the Commission and is denied, the previously submitted final plat and any preliminary plat(s) shall also be deemed to have been denied thus necessitating submission of a new application governed by the regulations, rules and other laws in effect at the time of the submission of the new application.

(2) Subsequent to final plat approval by the Commission, the applicant shall return signed and notarized copies of the final plat, as approved, along with any other required documents and fees necessary for filing the plat with the County Clerk, to the Planning Department within 45 calendar days following approval, in accordance with requirements established by the City; or if construction of any public improvement is required prior to the filing of a final plat, the owner or developer shall return signed and notarized copies of the final plat, as approved, along with any other required documents and fees necessary (including current documents required to show proof of ownership as outlined in Sec. 9.04.042(f) to the Planning Department before said public improvements will be accepted by the City and before said final plat will be recorded with the County Clerk.

(3) All easements shall be included on the final plat, including the recording information for those easements that are filed or recorded as separate instruments, as required by utility companies and the City prior to filing the final plat.

(i) Lapse of Final Plat Approval

The approval of a final plat shall be effective for a period of six (6) months following the date that the final plat is approved by the Commission, at the end of which time the applicant must have recorded the final plat with the County Clerk. If the applicant has not met the requirements for recording of the final plat with the County Clerk within six (6) months, the final plat approval shall be null and void, and the applicant shall be required to submit a new plat for review subject to the then existing zoning restrictions and subdivision regulations. No Certificate of Occupancy or Change of Occupancy permit will be allowed for the property until the applicant has recorded the final plat with the County Clerk.

(j) Final Plat Approval Process Flowchart

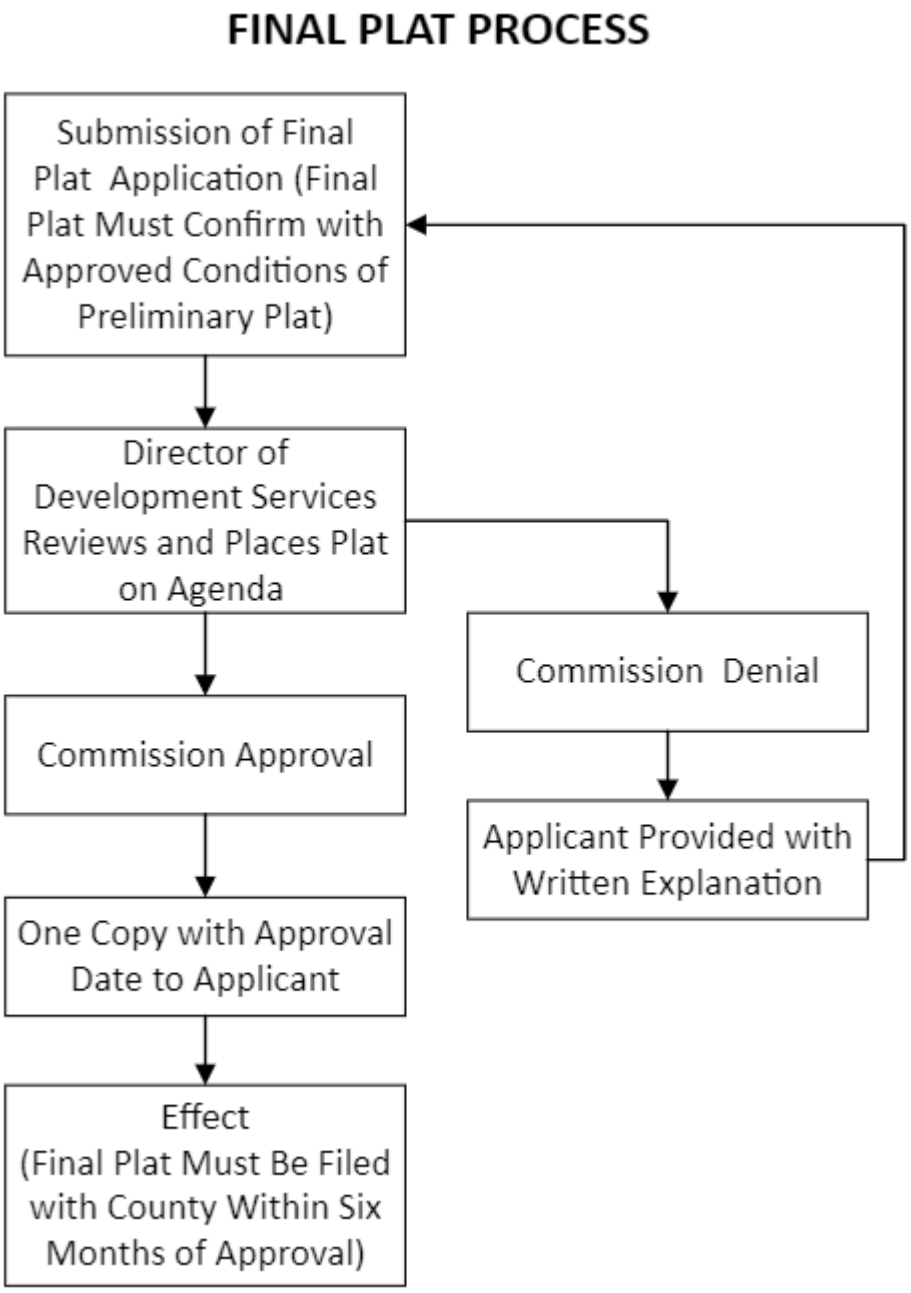

Sec. 9.02.047. Development Plats

(a) Authority

This section is adopted pursuant to the Texas Local Government Code, Chapter 212, Subchapter B, Sections 212.041 through 212.050, as amended.

(b) Applicability.

For purposes of this section, the term “development” means the construction of any building, structure, or improvement of any nature (residential or nonresidential), or the enlargement of any external dimension thereof. This section shall apply to any land lying within the City or within its extraterritorial jurisdiction in the following circumstances:

(1) The development of any tract of land that has not been platted or replatted prior to the effective date of these subdivision regulations, unless expressly exempted herein; or

(2) The development of any tract of land for which the property owner claims an exemption from the City's subdivision regulations, including requirements to replat, which exemption is not expressly provided for in such regulations; or

(3) The development of any tract of land for which the only access is a private easement or street; or

(4) The division of any tract of land resulting in parcels or lots each of which is greater than five acres in size, and where no public improvement is proposed to be dedicated or constructed.

(c) Exceptions

No development plat shall be required where the land to be developed has received final plat, conveyance plat or replat approval prior to the effective date of these subdivision regulations or a final plat, conveyance plat, or replat has been filed in accordance with these subdivision regulations.

(d) Prohibition on Development

No development shall commence, nor shall any building permit be issued, for any development or land division subject to this section, until a development plat has been approved by the Commission.

(e) Standards of Approval

The development plat shall not be approved until the following standards have been satisfied:

(1) The proposed development conforms to all City plans, including but not limited to, the Comprehensive Plan, utility plans, and applicable capital improvements plans;

(2) The proposed development conforms to the requirements of the Zoning Ordinance (if located within the City's corporate limits) and these subdivision regulations;

(3) The proposed development is adequately served by public facilities and services, parks, and open space, to the extent necessary based on the nature of the development, and in conformance with City regulations;

(4) The proposed development will not create a safety hazard on a public street (such as by not providing adequate on-site parking or vehicle maneuvering space for a restricted-access/gated entrance);

(5) Appropriate agreements for acceptance and use of public dedications to serve the development have been tendered; and

(6) The proposed development conforms to the design and improvement standards contained in these subdivision regulations and in the City's design standards, and to any other applicable codes or ordinances of the City that are related to development of a land parcel.

(f) Conditions

The Commission may impose such conditions on the approval of the development plat as are necessary to ensure compliance with the standards in Subsection (e) of this section.

(g) Approval Procedure

The application for a development plat shall be submitted to the City in the same manner as a final plat, and shall be approved, conditionally approved, or denied by the Commission and in a similar manner as a final plat.

(h) Submittal Requirements

The Director of Development Services may establish—not inconsistent with this Article—forms and standards with regard to the content, format, and graphics for development plats. The proposed development plat shall show information as specified on a form or packet provided by the Planning Department.

(i) Development Plat Approval Process Flowchart

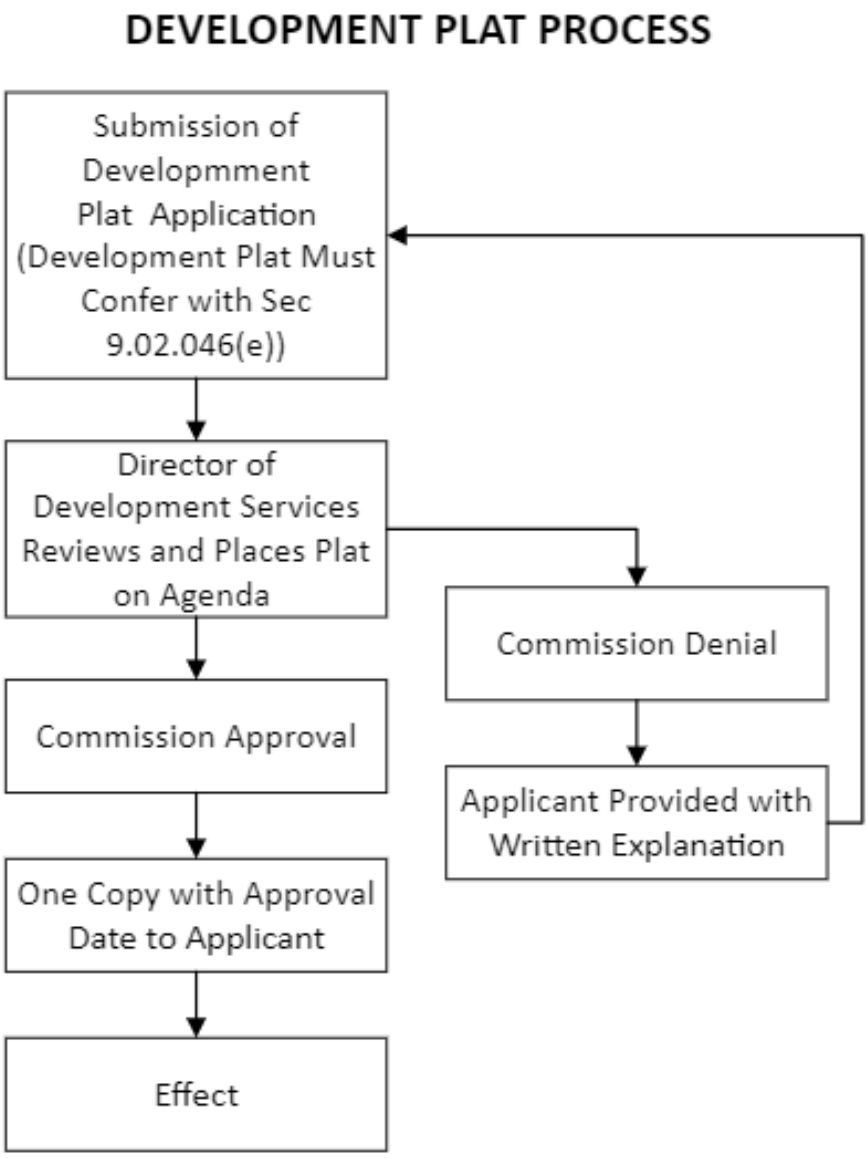

Sec. 9.02.048. Replatting

(a) Replat Required

Unless otherwise expressly provided for herein, a property owner who proposes to replat any portion of an already approved and filed final plat, other than to amend or vacate the plat, must first obtain approval for the replat under the same standards and by the same procedures prescribed for the final platting of land by these subdivision regulations. All improvements shall be constructed in accordance with the same requirements as for a construction or final plat, as provided herein.

(b) Replatting without Vacating Preceding Plat.

A replat of a final plat or portion of a final plat may be recorded and is controlling over the preceding plat without vacation of that final plat if the replat:

(1) Is signed and acknowledged by only the owners of the property being replatted;

(2) Is approved, after a public hearing on the matter at which parties in interest and citizens have an opportunity to be heard by the Commission; and

(3) Does not attempt to amend or remove any covenants or restrictions previously incorporated in the final plat.

(c) Previous Requirements or Conditions of Approval which are still Valid.

In addition to compliance with Subsection (b) of this section, a replat without vacation of the preceding plat must conform to the requirements of this Subsection (c) if: (i) during the preceding five years, any of the area to be replatted was limited by a zoning classification to residential use for not more than two residential units per lot; or (ii) any lot in the preceding plat was limited by deed restrictions to residential use for not more than two residential units per lot.

(1) Notice of the public hearing required under Subsection (b) of this section shall be given before the 15th calendar day before the date of the hearing by publication in an official newspaper or a newspaper of general circulation in Collin County. Notice of the public hearing shall also be given by written notice before the 15th calendar day before the date of the hearing, with a copy or description of any requested waivers/suspensions, sent to the property owners, as documented on the most recently approved ad valorem tax roll of the City, of lots that are in the original subdivision and that are within 200 feet of the lot(s) to be replatted. In the case of a subdivision in the extraterritorial jurisdiction, the most recently approved county tax roll shall be used. The written notice may be delivered by depositing the notice, properly addressed with appropriate postage paid, in a post office or postal depository within the boundaries of the City.

(2) If the replat requires a waiver/suspension as defined in Sec. 9.02.010 of this Article, and if the property owner(s) of 20% or more of the total land area of lots to whom notice is required to be given under Subsection (1), above, file with the City a written protest of the replatting before or at the public hearing, then approval of the replat will require the affirmative vote of at least 3/4 of the members present of the Commission. For a legal protest, written instruments signed by the owners of at least 20% of the total land area of the lots or land immediately adjoining the area covered by the proposed replat and extending 200 feet from that area, but within the original subdivision, must be filed with the City prior to the close of the public hearing. In computing the percentage of land area subject to the “20% rule” described above, the area of streets and alleys shall be included.

(3) Compliance with Subsection (2) above is not required for approval of a replat for any part of a preceding plat if the area to be replatted was designated or reserved for other than single- or two-family (i.e.,

duplex) residential use by notation on the last legally recorded plat or in the legally recorded restrictions applicable to the plat. For example, for a replat involving nonresidential property, a public hearing must be held, pursuant to Subsection (2) above, but notice of the hearing does not have to appear in the newspaper and written notices do not have to be mailed to individual property owners within 200 feet of the subject property.

(d) Adding or Deleting Lots

Any replat that adds or deletes lots must include the original subdivision and lot boundaries. If a replat is submitted for only a portion of a previously platted subdivision, the replat must reference the previous subdivision name and recording information, and must state on the replat the specific lots which have changed along with a detailed “purpose for replat” statement.

(e) Vacation of Plat

If the previous plat is vacated as prescribed in Section 212.013 of the Texas Local Government Code, as amended, and as provided in Sec. 9.02.050 of this Article, a public hearing is not required for a replat of the area vacated. It would, instead, be submitted as a new subdivision plat and reviewed accordingly.

(f) Approval Requirements

The replat of the subdivision shall meet all the requirements for a final plat for a new subdivision that may be pertinent, as provided for herein, including requirements that pertain to infrastructure, such as streets and utilities. Approval of a revised preliminary plat may be required prior to the approval of a replat if the replat necessitates the construction of public infrastructure or requires amendments to previously approved infrastructure construction plans.

(g) Title of Replat

The title shall identify the document as a “Final Plat” of the “_____ Addition, Block _____, Lot(s) _____, Being a Replat of Block _____, Lot(s) _____ of the _____ Addition, an Addition to the City of Anna, Texas, as recorded in Volume/Cabinet _____, Page/Slide _____ of the Plat Records of Collin County, Texas”.

(h) Application for Replat

An application submittal for a replat shall be the same as for a final plat, and shall be accompanied by the required number of copies of the plat, a completed application form, the required submission fee (per the City's current fee schedule), and a certificate showing that all taxes have been paid on the subject property and that no delinquent taxes exist against the property. The replat shall also bear a detailed “purpose for replat” statement that describes exactly what has been changed on the plat since the original (or previous) plat was approved by the City and filed at the County. A copy of all application materials for a replat shall be simultaneously submitted to the Planning Department for review in the same manner as for a final plat, or the application shall be deemed incomplete.

(i) Recording of Replat

The replat shall be recorded at the County in the same manner as prescribed for a final plat, and approval of a replat shall expire if all filing materials are not submitted to the Planning Department and if the replat is not recorded within the time period specified for a final plat.

(j) Replat Approval Process Flowchart

REPLAT PROCESS

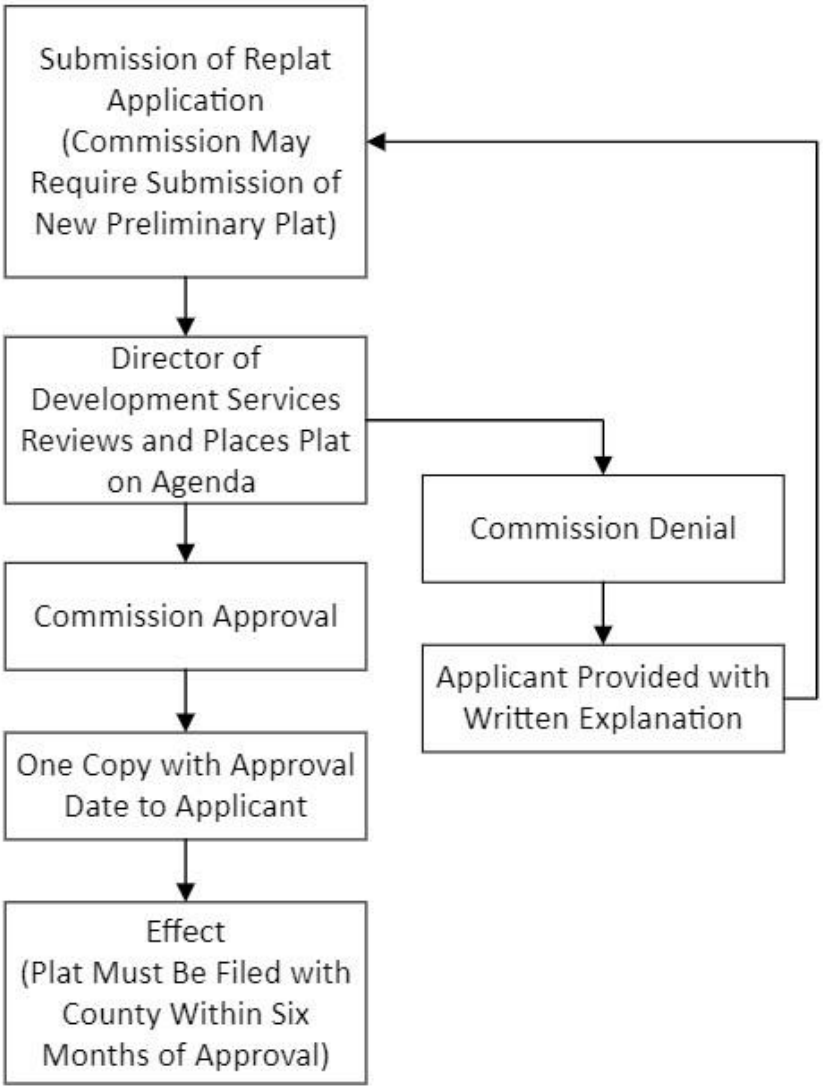

Sec. 9.02.049. Amending Plats

(a) An amending plat shall meet all of the informational, procedural, and relevant submission requirements set forth for a final plat.

(b) Submittal

A copy of all application materials for an amending plat shall be simultaneously submitted to the Director of Development Services for review in the same manner as for a final plat, or the application shall be deemed incomplete.

(c) Permitted Purposes

An amending plat may be recorded and is controlling over the preceding or final plat without vacation of that plat, if the plat being amended is signed by the applicants only and if the plat being amended is for one or more of the purposes set forth in this section. The procedures for amending a plat shall apply only if the sole purpose of amending the plat is to achieve at least one of the following:

(1) Correct an error in a course or distance shown on the preceding plat;

(2) Add a course or distance that was omitted on the preceding plat;

(3) Correct an error in a real property description shown on the preceding plat;

(4) Indicate monuments set after the death, disability, or retirement from practice of the engineer or registered professional land surveyor (RPLS) responsible for setting monuments;

(5) Show the location or character of a monument that has been changed in location or character or that is shown incorrectly as to location or character on the preceding plat;

(6) Correct any other type of scrivener or clerical error or omission previously approved by the municipal authority responsible for approving plats, including lot numbers, acreage, street names, and identification of adjacent recorded plats;

(7) Correct an error in courses and distances of lot lines between two adjacent lots if:

(A) Both lot owners join in the application for amending the plat;

(B) Neither lot is abolished;

(C) The amendment does not attempt to remove or modify recorded covenants or restrictions or easements; and

(D) The amendment does not have a material adverse effect on the property rights of the owners in the plat;

(8) Relocate a lot line to eliminate an inadvertent encroachment of a building or other improvement on a lot line or easement;

(9) Relocate one or more lot lines between one or more adjacent lots if:

(A) The owners of all those lots join in the application for amending the plat;

(B) The amendment does not attempt to remove or modify recorded covenants or restrictions or easements; and

(C) The amendment does not increase the number of lots; or

(10) Make necessary changes to the preceding plat to create six or fewer lots in the subdivision or a part of the subdivision covered by the preceding plat if:

(A) The changes do not affect applicable zoning and other regulations of the City;

(B) The amendment does not attempt to remove or modify recorded covenants or restrictions or easements; and

(C) The area covered by the changes is located in an area that the Commission has approved, after a public hearing, as a residential improvement area;

(11) Replat one or more lots fronting on an existing street if:

(A) The owners of all those lots join in the application for amending the plat;

(B) The amendment does not attempt to remove or modify recorded covenants or restrictions or easements;

(C) The amendment does not increase the number of lots; and

(D) The amendment does not create or require the creation of a new street or make necessary the extension of municipal facilities.

(d) No Requirement for Notice or Public Hearing

Notice, a public hearing, and the approval of other lot owners are not required for the approval and issuance of an amending plat.

(e) Title

The amending plat shall be entitled and clearly state that it is an "Amending Plat," and it shall include a detailed "Purpose for Amending Plat" statement that describes exactly what has been changed on the plat since the original (or previous) plat was approved by the City and filed at the County. It shall also state the specific lots affected or changed as a result of the amending plat, and shall include the original subdivision plat boundary.

(f) Procedure

Other than noted above, the procedure for approval of plat amendment(s) shall be the same as for a final plat.

(g) Recordation

The amending plat shall be recorded with the County Clerk in the same manner as prescribed for a final plat, and approval of an amending plat shall expire if all required recording filing materials are not submitted to the City and if the amending plat is not recorded within the time periods specified for a final plat.

Sec. 9.02.050. Plat Vacation

(a) By Property Owner

The property owner of the tract covered by a plat may vacate, upon approval by the Commission and City Council, the plat at any time before any lot in the plat is sold. The plat is vacated when a signed, acknowledged instrument declaring the plat vacated is approved and recorded in the manner prescribed for the original plat.

(b) By All Lot Owners

If some or all of the lots covered by the plat have been sold, the plat, or any part of the plat, may be vacated on the application of all the owners of lots in the plat with approval obtained in the manner prescribed for the original plat.

(c) Criteria

The Commission shall approve the petition for vacation on such terms and conditions as are in accordance with Section 212.013 of the Texas Local Government Code (as amended), and as are reasonable to protect the public health, safety, and welfare. As a condition of vacation of the plat, the Commission may direct the petitioners to prepare and seek approval of a revised final plat in accordance with these subdivision regulations such that the property is not without a plat.

(d) Effect of Action

On the execution and recording of the vacating instrument, the vacated plat shall have no effect. Regardless of the Commission's action on the petition, the property owner will have no right to a refund of any monies, fees, or charges paid to the City nor to the return of any property or consideration dedicated or delivered to the City except as may have previously been agreed to by the Commission.

(e) City-Initiated Plat Vacation

(1) General Conditions

The City Council, on its motion and following a public hearing on the matter, may vacate the plat of an approved or recorded subdivision or addition when:

(A) Construction on the improvements required for the development have not been completed within two years following the date the plat was approved by the City;

(B) No lots within the approved plat have been sold within five years following the date that the plat was approved by the City;

(C) The property owner has breached a subdivision improvement agreement (see Division 6) and the City is unable to obtain funds with which to complete construction of public improvements, except that the vacation shall apply only to lots owned by property owner or its successor; or

(D) The plat has been of record for more than five years and the City determines that the further sale of lots within the subdivision or addition presents a threat to public health, safety or welfare, except that the vacation shall apply only to lots owned by the property owner or its successors.

(2) Procedure

After review and approval by the Commission, and upon any motion of the City Council to vacate the plat of any previously approved subdivision or addition, in whole or in part, the City shall publish notice in a newspaper of general circulation in the City before the 15th day prior to the date of the public hearing at which the plat vacation shall be heard by the City Council. The City shall also provide written notice to all property owners within the subdivision or addition. The notice shall state the time and place for a public hearing before the Council on the motion to vacate the subdivision or addition plat. The Council shall approve the plat vacation only if the criteria and conditions cited above are satisfied.

(3) Record of Plat Vacation

If the City Council approves vacating a plat, the City shall cause a copy of the plat vacation instrument to be recorded in the office of the County Clerk of Collin County along with an exhibit showing a drawing of the area or plat vacated. The County Clerk shall write legibly on the vacated plat the word “Vacated” and shall enter on the plat a reference to the volume and page at which the vacating instrument is recorded. If the City Council vacates only a portion of a plat, it shall cause a revised final plat drawing to also be recorded that shows that portion of the original plat that has been vacated and that portion that has not been vacated. Upon the execution and recording of the vacating instrument the vacated plat (or the vacated portion of the plat) has no effect.

Sec. 9.02.051. Minor Plats

(a) Submission Requirements

A minor plat shall meet all of the informational and relevant submission requirements set forth for a final plat.

(b) Application Materials

A copy of all application materials for a minor plat shall be simultaneously submitted to the Planning Department for review in the same manner as for a final plat, or the application shall be deemed incomplete.

(c) No Requirement for Notice and Public Hearing

Notice, a public hearing, and the approval of other lot owners are not required for the approval of a minor plat.

(d) Title

The minor plat shall be entitled and clearly state that it is a “Minor Plat.”

(e) Recordation

The minor plat shall be recorded in the same manner as prescribed for a final plat, and approval of a minor plat shall expire if all required recording filing materials are not submitted to the City and if the minor plat is not recorded within the time periods specified for a final plat.

Section 9.02.052 through Section 9.02.080. (Reserved)

Division 3. SUBDIVISION DESIGN STANDARDS

Sec. 9.02.081. Streets

(a) Conformance With City's Policies and Regulations.

The construction, arrangement, character, extent, width, grade and location of all streets shall conform to the City's comprehensive plan and design standards, and shall be considered in their relation to the following, whether the streets are within the City, [or] within its ETJ area:

(1) Existing and planned streets or driveways;

(2) Topographical conditions (the street layout shall, to the greatest extent possible, be sited and aligned along natural contour lines, and shall minimize the amount of cut and fill on slopes in order to minimize the amount of land area that is disturbed during construction);

(3) Public safety; and

(4) Their appropriate relation to the proposed uses of the land to be served by such streets.

(b) Residual Strips.

Reserve or residual strips of land controlling access to or egress from other property, or to or from any street or alley, or having the effect of restricting or damaging the adjoining property for subdivision purposes, or which will not be taxable or accessible [assessable] for improvements shall not be permitted in any subdivision unless such are required by the City in the public interest (such as to enhance public safety or other public interest). All streets shall be constructed in accordance with these subdivision regulations and with the City's design standards.

(c) Adequacy Of Streets and Thoroughfares.

(1) Responsibility for adequacy of streets and thoroughfares.

The property owner shall ensure that the subdivision is served by adequate streets and thoroughfares, and shall be responsible for the costs of rights-of-way and street improvements, in accordance with the following policies and standards, and subject to the City's cost participation policies on oversized facilities.

(2) General Policy.

Every subdivision shall be served by improved streets and thoroughfares adequate to accommodate the vehicular traffic to be generated by the development. Proposed streets shall provide a safe, convenient and functional system for traffic circulation; shall be properly related to the City's thoroughfare plan, other portions of the comprehensive plan and any amendments thereto, and any street classification system.

(3) Street Network

New subdivisions shall be supported by a street network having adequate capacity, ingress/egress, and safe and efficient traffic circulation.

(4) Approach Streets and Access

All subdivisions must have at least two points of vehicular access, and must be connected via improved streets (streets that meet the City standards) to the City's improved thoroughfare and street system by one or more approach streets of such dimensions and improved to such standards as required herein. All residential subdivisions, with the exception of multifamily dwellings and single-unit or duplex unit park

developments, shall provide no less than one entrance for each 50 lots including stubs for future development and in no case shall have more than 150 lots for each connection to an existing street.

(A) Required Improvements

Requirements for dedication of right-of-way and improvement of approach streets shall comply with section 9.02.082 of this article.

(B) Points of Access Defined and Related Requirements

"Two points of vehicular access" shall be construed to mean that the subdivision has at least two improved street entrances accessing the subdivision from the City's improved thoroughfare system.

(i) For nonresidential subdivisions and multifamily developments, cross access provided through an existing or future adjacent lot may count as one entrance if approved by the Director of Development Services.

(ii) For residential subdivisions, the Commission may, at their discretion and upon a finding that such will not compromise public safety or impede emergency access, accept a single, median-divided entrance from the City's improved thoroughfare system which provides at least two routes to the interior of the subdivision. For example, the entrance street is not a dead- end or cul-de-sac, and it does not create a "bottleneck" allowing only one emergency route into the interior of the subdivision. Residential lots may not front onto any median-divided entrances, and residential driveways may not be accessible to median divided entryways.

(iii) Dimensions associated with a median divided entryway shall be built in general accordance with Diagram B of Division 9 of this article.

(iv) All residential subdivisions will designate a primary entrance which must meet the base requirements listed below in addition to meeting a required 20-point total from the list of approved, additional point features located in Table 2 and Table 3 of division 9 of this article. (See diagram B for examples.)

a. The primary entrance for a residential subdivision must have a median divided entryway and have a minimum entryway length of one typical, residential lot depth from the community plus the minimum 20-foot landscape buffer/common area lot depth. In terms of subdivisions with a range of lot sizes, the median, typical lot depth will be required.

b. Primary subdivision entrances are prohibited from terminating at a "T-intersection" unless it terminates on an approved option from Table 2 in division 9 of this article, or on the base requirement of green space equal to one typical (or median) residential lot. It is prohibited for the T-intersection to terminate into a residential home lot.

(v) Secondary subdivision entrances are required to have subdivision signage except when the secondary entrance is from another residential subdivision. An additional 15-point total for the first 200 dwelling units plus 5 points for every 50 dwelling units over 200 must be met by adding upgraded secondary entrance features or features within the subdivision found in Table 4 and Table 5 of division 9 of this article.

(vi) As part of the zoning request or community's first phase preliminary plat submittal, an exhibit showing compliance with the Neighborhood Point Totals (from Tables 2, 3, 4, and 5 of division 9 of this article) for the overall community shall be provided and approved for compliance by the Director of Development Services.

(vii) As part of the Engineering Plan submittal for residential subdivisions, detailed information showing compliance with the Neighborhood Point Totals located within Tables 2, 3, 4, and 5 of division 9 of this article shall be provided on the landscape plan and approved for compliance by the Director of Development Services prior to final approval of the engineering plans.

(viii) For the purpose of this section multifamily dwellings and single unit or duplex unit park developments are not considered residential developments.

(C) Street Openings to Adjoining Properties

Subdivision design shall provide for a reasonable number and reasonable locations of street openings to adjoining properties. Such an opening shall occur at least every 1,000 feet or in alignment with abutting subdivision streets along each boundary of the subdivision.

(D) Adequate Emergency Access

The subdivision shall be designed to provide adequate emergency access for public safety vehicles.

(5) Off-Site and Adjacent Improvements Based on Traffic Impact Analysis (TIA)

(A) If in the opinion of the City Engineer or Director of Development Services, sufficient vehicular access and street capacity approaching and adjacent to the subdivision is not available to serve the proposed subdivision, the City may require the developer provide a traffic impact analysis of the proposed development. Such TIA when required shall be submitted to the City as part of the preliminary plat application.

(B) Where a traffic impact analysis demonstrates the need for off-site facilities or improvements to existing adjacent facilities, the developer shall make such improvements to adjacent streets, off-site collector and arterial streets and intersections as are necessary to mitigate traffic impacts generated by the development consistent with section 9.02.082 of this article.

(6) Street Dedications

(A) Dedication of Right-of-Way

The developer shall dedicate all rights-of-way required for existing or future streets, and for all required street improvements, including perimeter streets and approach streets, as shown in the comprehensive plan and as required by the design standards or by other valid development plans approved by City Council.

(i) In the case of perimeter streets, 1/2 of the total required right-of-way width for such streets shall be dedicated, unless the proposed development is on both sides of the street, or unless there is some other compelling reason to require dedication of more than half of the right-of-way width (such as avoiding the infringement upon or demolition of existing structures, avoiding crossing a creek or floodplain or some other obstacle, or other similar circumstance).

(ii) When the proposed development is on both sides of the street, the full right-of-way width shall be dedicated.

(iii) In cases where construction of only one-half the street is deemed impractical or unsafe, more than 1/2 of the required width shall be dedicated and the full street shall be constructed by the developer.

(B) Perimeter Streets

Where an existing improved half-street is adjacent to a new subdivision or addition, the other half of the right-of-way shall be dedicated and improved by the developer of the new subdivision or addition in accordance with section 9.02.082 of this article.

(C) Slope Easements

The dedication of easements, in addition to dedicated rights-of-way shall be required whenever, due to topography, additional width is necessary to provide adequate earth slopes. Such slopes shall be no steeper than three feet horizontal run to one-foot vertical height, or a 3:1 slope.

(7) General Construction

All improvements required to be constructed by these subdivision regulations shall be constructed to City standards and within rights-of-way as required by the thoroughfare plan and these subdivision regulations, and in accordance with the design standards and other City standards as may be from time to time amended or adopted.

(8) Intersection Improvements and Traffic-Control Devices

Intersection improvements and traffic-control devices shall be installed as may be required by the City for traffic safety and efficiency.

(9) Phased Development

Where a subdivision is proposed to occur in phases, the applicant, in conjunction with submission of the concept plan, shall provide a schedule of development.

(A) Intended Plan of Development and Dedication of Rights-of-Way

The schedule shall set forth the intended plan of development and dedication of rights-of-way for streets and street improvements, whether on-site or off-site, intended to serve each proposed phase of the subdivision.

(B) City Determination

The City shall determine whether the proposed streets and street improvements are adequate pursuant to standards herein established, and may require that a traffic impact analysis be submitted for the entire project or such phases as the City determines to be necessary to decide whether the subdivision will be adequately served by streets and thoroughfares.

(10) Private Streets

New subdivisions may be constructed with private streets that meet or exceed the specifications set forth in the design standards for similar public streets. The construction of private streets shall be subject to standard City inspections. Any private street subdivisions that were in existence (i.e., platted of record at the county) on the effective date of these subdivision regulations shall be allowed to remain as private street subdivisions provided that the conditions of the private streets and the maintenance thereof continues to meet or exceed City standards, and provided that a viable homeowners' association (HOA) or other similar organization continues to exist to maintain the private streets and all appurtenances. The City will not assist in enforcing deed restrictions. The City may periodically inspect private streets, and may require the HOA or other responsible organization to make any repairs necessary to ensure efficient emergency access and to protect the public health, safety, convenience and welfare.

(A) Private Streets: Construction and Maintenance Cost

The City shall not pay for any portion of the cost of constructing or maintaining a private street.

(B) Private streets: Traffic-Control Devices

All private traffic-control devices and regulatory signs shall conform to the Texas Manual of Uniform Traffic Control Devices, as amended, and to City standards.

(C) Private Streets: Restricted Access

The entrances to all private streets shall be clearly marked with a sign, placed in a prominent and visible location, stating that the streets within the subdivision are private, and that they are not maintained nor regularly patrolled by the City. All restricted access entrances shall be manned 24 hours every day, or they shall provide a reliable, alternative means of ensuring access into the subdivision by the City, by emergency service providers, and by other utility or public service providers, such as postal carriers and utility companies, with appropriate identification. The method to be used to ensure City and emergency access into the subdivision shall be approved by the City's fire department and by any other applicable emergency service providers. If the homeowners' association (HOA) fails to maintain reliable access as required herein, the City may enter the private street subdivision and remove any gate or device which is a barrier to access at the sole expense of the HOA.

(D) Private Streets: Waiver of Services

Certain city services may not be provided for private street subdivisions. Among the services which may not be provided include routine law enforcement patrols, enforcement of traffic and parking regulations, and preparation of accident reports. Depending upon the characteristics of the development and upon access limitations posed by the design of entrances into the subdivision, other services (such as sanitation) may also not be provided.

(E) Private Streets: Petition to Convert to Public Streets

The homeowners' association (HOA) may petition the City to accept private streets and any associated property as public streets and right-of-way upon written notice to all association members and upon the favorable vote of a majority of the membership. However, in no event shall the City be obligated to accept said streets as public. Should the City elect to accept the streets as public, then the City has the right to inspect the private streets and to assess the lot owners for the expense of needed repairs concurrent with the City's acceptance of the streets. The City shall be the sole judge of whether repairs are needed. The City may also require, at the association's or the lot owners' expense, the removal of any guard houses, access control devices, landscaping or other aesthetic amenities located within the street right-of-way or within any other common area. The City may also require the dedication of additional street right-of-way.

(F) Private Streets: Hold Harmless

The homeowners' association (HOA), as owner of the private streets and appurtenances, shall release, indemnify, defend and hold harmless the City, any other governmental entity, and any public utility entity for damages to the private streets that may be occasioned by the reasonable use of the private streets by same, and for damages and injury (including death) arising from the condition of the private streets, out of any use of access gates or cross-arms, or out of any use of the subdivision by the City or governmental or utility entity.

(d) Required Components of Traffic Impact Analysis (TIA)

Whenever a TIA is conducted, the following elements shall be included:

(1) General Site Description.

The TIA shall include a detailed description of the street network within one mile of the site, a description of the proposed land uses, the anticipated states of construction, and the anticipated completion date of the proposed land development. This description, which may be in the form of a map, shall include the following items:

(A) All major intersections;

(B) All proposed and existing ingress and egress locations;

(C) All existing street widths and rights-of-way; and

(D) All existing traffic signals and traffic-control devices.

(2) Proposed Capital Improvements

The TIA shall identify any changes to the street network within one mile of the site that are proposed by any government agency or other developer. This description shall include the above items as well as any proposed construction project that would alter the width or alignment of streets affected by the proposed development.

(3) Street Impact Analysis

(A) Trip Generation

For the proposed use, items required to determine trip generation shall be based upon the trip generation rates contained in the most recent edition of the Institute of Transportation Engineers' Trip Generation book, or shall be based upon data generated by actual field surveys of area uses comparable to the proposed use and approved by the City. The following items shall be required to determine trip generation:

(i) Average weekday trip generation rates (trip ends);

(ii) The average weekend trip generation rates (for uses other than residential or institutional);

(iii) The highest average a.m. and p.m. hourly weekday trip generation rates; and

(iv) The highest hourly weekend generation rates (for uses other than residential or institutional).

(B) Trip Distribution

Within the study area identified in subsection (d)(1) of this section (General site description), the distribution of trips to arterial and collector streets shall be in conformity with accepted traffic engineering principles, taking into consideration:

(i) The land use categories of the proposed development;

(ii) The area from which the proposed development will attract traffic;

(iii) Competing developments (if applicable);

(iv) The size of the proposed development;

(v) Development phasing;

(vi) Surrounding existing and anticipated land uses, population and employment;

(vii) Existing and projected daily traffic volumes; and

(viii) Existing traffic conditions identified pursuant to subsection (d)(1) of this section.

(4) Adequacy Determination

The street network included within the TIA shall be considered adequate to serve the proposed development if existing streets identified as arterials and collectors are basically satisfactory to good progression of traffic and can accommodate the following:

(A) The existing service volume; and

(B) The service volume of the proposed development; and

(C) The service volume of approved but un-built developments holding valid, unexpired building permits.

(5) Intersection Analysis

(A) Level of Service Analysis

For intersections within the street TIA area described in subsection (d)(1) of this section (General site description), a level of service analysis shall be performed for all arterial-to-arterial, arterial-to-collector, collector-to-arterial, and collector-to-collector intersections, and for any other pertinent intersections identified by the City. Also, level of service analyses will be required on all proposed site driveway locations for all nonresidential developments.

(i) The City may waive analysis of minor intersections and site driveway locations within the TIA's one-mile radius.

(ii) The level of service analysis shall be based upon the highest hourly average a.m. or p.m. peak weekday volume or highest average hourly peak weekend volume as determined from a two-day survey of weekday volumes and, where necessary, a one-day survey of weekend volumes.

(iii) The level of service analysis shall take into consideration:

a. Lane geometry;

b. Traffic volume;

c. Percentage of right-hand turns;

d. Percentage of left-hand turns;

e. Percentage (and typical size) of trucks;

f. Intersection width;

g. Number of lanes;

h. Signal timing and progression;

i. Street grades;

j. Pedestrian and bicycle flows;

k. School routes;

l. Number of accidents; and

m. Peak hour factor.

(B) Adequacy Analysis

The intersections included within the TIA shall be considered adequate to serve the proposed development if existing intersections can accommodate:

(i) The existing service volume;

(ii) The service volume of the proposed development; and

(iii) The service volume of approved but un-built developments holding valid, unexpired building permits.

(e) Arrangement of Streets Not Shown on the Thoroughfare Plan

For streets that are not shown on the City's comprehensive plan, such as local residential streets, the arrangement of such streets within a subdivision shall:

(1) Provide for the continuation or appropriate projection of existing streets from or into surrounding areas;

(2) Conform to a plan for the neighborhood approved or adopted by the City to meet a particular situation where topographical or other conditions make continuance or conformity to existing streets impractical;

(3) Provide for future access, such as by stubbing streets for future extension, to adjacent vacant areas which will likely develop; and

(4) Not conflict in any way with existing or proposed driveway openings, including those on the other side of an existing or planned median-divided arterial, in which case new streets shall align with such driveway openings such that median openings can be shared.

(f) Discouraging Through Traffic in Residential Development

(1) Wherever the right-of-way width of a collector or residential street must transition to a greater or lesser width, such transition shall occur along the front, side or rear lot lines of adjacent lots (for a reasonable distance) and shall not occur within the street intersection itself. In other words, the right-of-way width shall be the same on both sides of the street intersection.

(2) Direct vehicular access from single-family or two-family residential lots onto any type of street other than a local street is prohibited, except for residential collector streets provided that neither side of the street runs along the vehicle-accessible side(s) of a lot(s) for a combined linear distance exceeding 20% of the total centerline length of the street. Such calculations shall be submitted with the preliminary plat application, thereby verifying that lots fronting onto a collector street do not exceed this allowed percentage.

(g) Residential Subdivision Abutting or Containing an Existing or Proposed Arterial Street

Where a residential subdivision abuts or contains an existing or proposed arterial street, the City may require marginal access streets, reverse frontage lots (lots which back onto the arterial), or such treatment as may be necessary for adequate protection of residential properties and to afford separation of through and local traffic.

(h) Reserve Strips Prohibited

Reserve strips controlling access to streets shall be prohibited, except where their control is required by the City.

(i) Centerline Offsets

Intersecting, undivided streets with centerline offsets of less than 150 feet shall be prohibited. Intersecting streets onto an existing or future divided street shall be configured such that the centerline offset will accommodate the appropriate median opening and left-turn lanes (with required transition and stacking distances) on each divided street, and shall be aligned with any existing or proposed streets or driveways on the opposite side of the divided street (in order to share the median opening).

(j) Degree Required for Intersections

A street intersection with a major thoroughfare shall be at a 90-degree angle and shall be tangent for at least 100 feet. All other street intersections shall be laid out so as to intersect as nearly as possible at a 90-degree angle or radial to the centerline of the intersecting street for the full right-of-way width of the intersecting street, and tangent to the intersecting street for at least 50 feet. No street shall intersect at an angle that is less than 80 degrees.

(k) Spacing of Intersections

Intersections of arterial streets shall be at least 800 feet apart.

(l) Street Section Requirements

(1) Typical street sections shall be based upon projected traffic volume, existing soil conditions, and drainage condition and requirements. Street right-of-way widths, pavement widths, and median widths shall be as shown on the comprehensive plan, in the City's design standards, and shall specifically be as specified in Division 9, Table 1.

(2) Open-ditch streets shall have a right-of-way width and pavement width as required in the design standards. Open-ditch streets may be approved only within a single-family subdivision where all lots within the subdivision are one acre or larger. Approval by the Commission and City Council of open-ditch streets is not mandatory but rather discretionary.

(m) Street Loading Requirements

Refer to the City's design standards.

(n) Half-Streets

(1) Unless otherwise provided within these subdivision regulations, only full-width streets shall be constructed. If the exceptions outlined herein are applicable, the construction of half-streets shall comply with section 9.02.082 of this article.

(2) Construction of half-streets shall be prohibited, except:

(A) When essential to the reasonable development of the subdivision in conforming with the other requirements of these subdivision regulations and the thoroughfare plan;

(B) Where the City makes a determination that there is no immediate need to be gained by constructing the full street section since no access from the street will be needed by the subdivision in question; or

(C) Where the City determines that it would be more practical, or cost effective, to delay construction of the other half of a street until the adjoining property is developed.

(3) Whenever a partial street has been previously platted along a common property line, the other portion of the street right-of-way shall be dedicated such that the right-of-way is increased to the street's ultimate planned width.

(o) Maximum and Minimum Length of Block or Street Segments

The maximum length of any block or street segment, including a looped street, shall be 1,200 feet and the minimum length of any block or street segment shall be 400 feet, as measured along the street centerline and between the point(s) of intersection with other through streets. A cul-de-sac or dead-end street shall not be considered a through street. The block length is not measured along the side of a block that does not include the front of any lot.

(p) Maximum and Minimum Length of Cul-De-Sac Streets

A cul-de-sac street shall not be longer than 600 feet and be a minimum of 400 feet, and at the closed end a cul-de-sac shall have a turnaround bulb with an outside pavement diameter of at least 80 feet and a right-of-way diameter of at least 100 feet. The length of a cul-de-sac shall be measured from the centerline of the intersecting street to the center point of the cul-de-sac bulb.

(q) City Council Waivers/Suspensions of Overlength Streets or Cul-De-Sacs

The City Council may approve waivers/suspensions (procedures for which are outlined in section 9.02.010 of this article) for overlength streets or cul-de-sacs, whether temporary or permanent, upon considering the following:

(1) Alternative designs;

(2) The effect of overlength streets upon access, congestion, delivery of municipal services, and upon convenience to residents of the subdivision in traveling to and from their homes; and

(3) Means of mitigation, including additional mid-block street connections, limitation on the number of lots to be served along an overlength street segment or cul-de-sac, points of emergency access, and additional fire protection measures.

(r) Dead-End Streets

(1) No dead-end streets shall be approved, except where no other alternative is available, and unless such dead-end streets are provided to connect with future streets on adjacent land (i.e., the dead-end street is a stub-out street).

(2) In the case of dead-end streets which will eventually be extended into the adjacent subdivision, no more than one lot (per side) can front onto the dead-end street stub unless a temporary turnaround bulb (with the appropriate temporary street easement) is provided at the end.

(3) A temporary dead-end street shall not exceed the maximum allowed length of a normal cul-de-sac and the temporary turnaround bulb must be constructed like a cul-de-sac, as provided in subsection (p) of this section. The City Engineer may authorize the use of asphalt or other durable paving material than concrete for the arc, or “wing,” portions of the temporary turnaround bulb in order to minimize the cost of removing those portions when adjacent development occurs.

(4) A note shall be placed on the final plat clearly labeling any temporary dead-end streets (if any) that will at some point be extended into the adjacent property.

(5) Signage shall be placed at the end of the constructed street stub, such as on the barricade, also stating that the street will be extended in the future. Signage and related lettering must be large enough to be legible by a person with normal vision at a 20-foot distance.

(6) Any required temporary turnaround easements shall be shown on the final plat along with their appropriate recording information, if they are off-site or are established by separate instrument.

(s) New Streets Extending Existing Streets

New streets which extend existing streets shall bear the names of the existing streets, and shall be dedicated at equal or greater right-of-way widths than the existing streets for an appropriate transition length, if applicable.

(t) Driveway Access - Residential and Nonresidential

(1) Residential Driveways

Residential driveway cuts shall not be allowed on streets that are larger than a neighborhood or residential collector street (60-foot right-of-way). Residential driveways shall be at least 30 feet from any intersection. Rear and side driveway access to collector and thoroughfare streets shall be prohibited.

(2) Nonresidential Driveways – Number

The maximum number of nonresidential driveway cuts permitted shall not exceed the following, according to the nonresidential lot size:

(A) One driveway cut for lot frontages of 100 feet or less;

(B) Two driveway cuts for lot frontages of 101 feet to 400 feet or less;

(C) Three driveway cuts for lot frontages of 401 feet to 600 feet;

(D) Four driveway cuts for lot frontages greater than 600 feet.

(3) Nonresidential Driveways – Separation

The minimum separation between driveways shall not be less than the following distances:

(A) Fifty (50) feet on local streets;

(B) Ninety (90) feet on neighborhood collector streets;

(C) One hundred (100) feet on divided and undivided collector streets.

(D) One hundred and twenty (120) feet on arterial streets;

(E) One hundred (100) feet or a distance equal to 60% of the lot frontage (whichever is less) on any type of street from a through-street intersection.

(4) Nonresidential Driveways - Shared Access

Shared access driveways may be required by the City in order to ensure public safety access by providing mutual/common access to a median opening, to minimize the number of driveway cuts on streets, thereby maintaining street mobility, and to facilitate traffic flow between adjacent lots. (See division 9, diagram A.)

(A) A shared mutual access easement(s) for a driveway(s) may be required between adjacent lots fronting on an arterial or collector street, as designated on the comprehensive plan (as the street exists or is planned to be improved in the future).

(B) The location and dimensions of such easement(s) shall be determined by the Director of Development Services.

(C) Such easements shall be noted on the preliminary plat and final plat.

(5) Nonresidential Driveways - Cross Access Internal Driveways

Cross access easements for internal driveways may be required by the City in order to minimize the number of driveway cuts on streets, thereby maintaining street mobility, and to facilitate traffic flow between adjacent lots. (See division 9, diagram A.)

(A) A cross access easement(s) for an internal driveway(s) may be required between adjacent lots.

(B) The location and dimensions of such easement(s) shall be determined by the Director of Development Services.

(C) Such easements shall be noted on the preliminary plat and final plat.

(6) Driveways (Residential and Nonresidential) on TxDOT Streets

All driveway cuts on streets and highways maintained by the Texas Department of Transportation (TxDOT) (e.g., state roads, highways) shall meet the requirements of TxDOT's Access Management Manual (as may be amended) and roadway design manual (as may be amended), as applicable for the spacing and design of the driveway, unless city standards are more stringent, in which case city standards shall be met.

(7) Maintenance Agreements

An agreement that provides for the perpetual maintenance of a shared driveway, cross access internal driveway, or any other common facility is required and must be filed at the time of final plat approval. All agreements are subject to review and approval by the City Attorney.

(8) Driveway Construction

All driveways that access streets or highways owned or maintained by the city shall be constructed in accordance with the driveway design standards outlined in the City's design standards. Notwithstanding any other provisions of this article or the design standards, rear and side residential driveway access to expressways, arterials and any type of collector streets shall be prohibited.

Sec. 9.02.082. Perimeter and Approach Streets

(a) Policy and Purpose

(1) It is the policy of the City that the developer or subdivider of a subdivision within the City or its extraterritorial jurisdiction shall be responsible for the dedication of right-of-way and the construction or improvement of appropriate portions of perimeter and approach streets which are necessitated by and attributable to that subdivision. The policy is based on the view that the developer of a subdivision should provide access and transportation facilities necessary to serve the new subdivision and that the perimeter and approach streets will provide access to and from the subdivision, thus increasing the marketability, utility, and ultimately the value of the property within the subdivision. The developer may be reimbursed for part of the cost of providing this access in accordance with this section.

(2) The purpose of this section is to establish responsibilities for the dedication of rights-of-way and the construction of street improvements on streets directly abutting and/or providing access to property undergoing the process of subdivision under laws and regulations of the City. This section is designed to be used in conjunction with the comprehensive plan to ensure an orderly development plan for the growth of the community and to ensure compatibility of street systems and the development of public works infrastructure necessary to support new growth and development.

(b) Requirement for Dedication and Construction of Perimeter Streets

(1) Dedication Requirement

(A) A subdivider shall dedicate a portion of the right-of-way for perimeter streets sufficient for the type of street that is reflected in the City's comprehensive at that location.

(B) The subdivider shall dedicate those portions of the right-of-way lying between the centerline of the perimeter street and the nearest property line of the subdivided property. If a subdivision borders only one side of a perimeter street, the subdivider is responsible for dedicating right-of-way needed for the one-half of the street right-of-way that is contiguous to the subdivider's property. If a subdivider owns a tract of land that is bordered by a perimeter street on more than one side, the subdivider is responsible for dedicating appropriate right-of-way for the entire width of the perimeter street.

(2) Additional Right-of-Way

When a subdivider is required to dedicate right-of-way for a perimeter street or to construct perimeter street improvements, the City may require the subdivider to dedicate right-of-way for ancillary drainage improvements and to construct necessary supporting drainage improvements.

(3) Required Paving/Construction

Minimum width of a two-lane thoroughfare section shall be 25 feet.

(c) Specific Perimeter Street Requirements

(1) Local Streets

When development occurs adjacent to a perimeter street that is not designated as an arterial or collector street on the comprehensive plan, the developer shall comply with the following requirements:

(A) Existing Street

If the local street adjacent to the subdivision is not already built to City standards, the developer shall, at the option of the City, prior to acceptance of the subdivision by the City:

(i) Dedicate any additional right-of-way or easements needed for the street and other public improvements directly adjacent to the developer's side of the existing street and right-of-way; and

(ii) Install, reinstall, or upgrade any street paving curb, gutter, drainage, sidewalks, signage, lighting, or other improvements as determined necessary by the Director of Development Services or City Engineer.

(B) Perimeter Street Fee for Existing Street

If the perimeter street was constructed by a prior developer under the provisions of a subdivision improvement agreement that allows for reimbursement (see section 9.02.202(i)), then the current developer shall be charged a perimeter street fee equal to the reimbursement amount described in the prior subdivision improvement agreement. The current developer shall pay this fee to the City before acceptance of the subdivision by the City.

(C) No Existing Street; Developer Responsibility for Construction

If the local street adjoining the development has not been constructed, or is in such condition that complete reconstruction is, in the opinion of the City Engineer or as determined by a traffic impact analysis necessary, the developer must construct a complete city standard street with curb, gutter,

drainage facilities, sidewalks, and signage in conformance with city standards. The initial developer is required to construct a complete street because it is impractical and unsafe to build only one-half of a two-lane street. The developer is responsible for all construction, engineering, testing, and inspection costs.

(2) Collector Streets

When development occurs adjacent to a perimeter street, which is designated as a major collector or minor collector street in the comprehensive plan, the developer shall comply with the following requirements:

(A) Existing Street

If the minor or major collector street adjacent to the subdivision is not already built to city standards, the developer shall:

(i) Dedicate any additional right-of-way or easements needed for other public improvements directly adjacent to the developer's side of the existing street surface and right-of-way; and

(ii) Install, reinstall, or upgrade any street paving, curb, gutter, drainage, sidewalks, signage, lighting, or other improvements as determined by the necessary by the Director of Development Services or City Engineer.

(B) Perimeter Street Fee for Existing Street

If the perimeter street was constructed by a prior developer under the provisions of a subdivision improvement agreement that allows for reimbursement (see section 9.02.202(i)), then the current developer shall be charged a perimeter street fee equal to the reimbursement amount described in the prior subdivision improvement agreement. The current developer shall pay this fee to the City before acceptance of the subdivision by the City.

(C) No Existing Street; Developer Responsibility for Construction

If the perimeter street adjoining the development is proposed to be a major or minor collector street, and the street has not been constructed or is in such condition that complete reconstruction is, in the opinion of the City Engineer or as determined by a traffic impact analysis necessary, the developers along each side of the street must construct at least two complete lanes with curb, gutter, signage, drainage and sidewalk facilities in conformance with city standards. The developer is responsible for all construction, engineering, testing, and inspection costs. Construction of the street or portion of the street, as required by the City, must be completed prior to acceptance by the City of the subdivision adjacent to the perimeter street.

(d) Requirement for Dedication and Construction of Approach Streets

(1) Non-Availability of Approach Street Access

If sufficient vehicular access approaching the subdivision is not available to serve the proposed subdivision as determined by the City Engineer or a traffic impact analysis, the developer must:

(A) Discontinue development until an adequate approach street has been installed providing access to and from an improved street/thoroughfare;

(B) Petition the City Council to expedite the construction or expansion of an approach street serving the proposed subdivision under its regular capital improvement program; or

(C) Construct or expand the approach street in order to provide required access to the proposed subdivision. The developer will be responsible for all costs associated with the construction of necessary approach streets, including, but not limited to engineering, surveying, testing, easement preparation easement and right-of-way acquisition, and inspection.

(e) Escrow Funds

(1) Established

The City shall establish an escrow fund for the deposit of all perimeter street fees. A separate escrow fund shall be established for each street constructed by the developer. All monies received from subsequent developments or subdivisions for pro-rata reimbursements shall be deposited into the specific escrow fund established. Funds in a specific escrow account shall be used only for the project for which the particular escrow fund was established.

(2) When City May Take Possession of Funds

In the event that the City collects a perimeter street fee under the terms of this section and the original developer no longer exists or cannot reasonably be located, the City may, after a period of six months, take possession of the funds and use them to make general street improvements in the City.

(f) Deadlines and Adjustments

(1) Time For Payment or Construction

All construction or escrow and payment of funds by a developer as required in this section shall be due and payable prior to acceptance of the subdivision by the City. Fees or construction requirements shall be paid for all property that is final platted at time of construction of the subdivision.

(2) Adjustment

The City Council may, in appropriate cases and based upon specific facts presented, authorize an adjustment, offset or waiver of any construction or fee payment requirements under this section where it is determined that such requirements place an unreasonable burden on the development, [or] do not bear a rough proportionality to the requirements necessary to serve the development or offset the impact of the development. All such requests for adjustments shall comply with the requirements in section 9.02.011 of this article.

Sec. 9.02.083. Alleys

(a) Application of Standards

The standards for alleys within this section shall be applicable to any alleys provided or constructed by a developer in any development in the City or its ETJ.

(b) Residential Alleys

In residential districts, alleys shall be parallel, or approximately parallel, to the frontage of the street. Alleys in residential districts shall provide a minimum of 20 feet of right-of-way and 15 feet of pavement.

(c) Nonresidential Alleys

Service alleys in nonresidential districts shall have a minimum right-of-way width of 20 feet and a pavement width of 15 feet.

(d) General Design Standards for Alleys

(1) Pavement

Alleys shall be paved in accordance with the City's design standards and construction standards that are in effect at the time the preliminary plat application is officially submitted and deemed a complete application.

(2) Turnouts and Street Entrances

Alleys shall have adequate turnouts and street entrances such that vehicular traffic flow is continuous and efficient. Where a temporary dead-end alley situation is unavoidable, a temporary turnaround bulb having a minimum radius of 40 feet or a turnout onto a street, either of which will need a temporary easement for street or alley purposes, shall be provided as determined by the Director of Development Services; in such case, the developer shall pay for and post a sign that meets City specifications at the entrance denoting the dead-end alley.

(3) Maximum Length and Waivers/Suspensions

Alleys shall not exceed a maximum length of 800 feet, as measured along the centerline of the alley and between intersections with other alleys or entrances onto streets (at the right-of-way line of the street at the alley entrance). The City Council may approve waivers/suspensions for overlength alleys upon consideration of the following:

(A) Alternative designs;

(B) The effect of overlength alleys upon access, congestion, delivery of municipal services, and upon convenience to residents of the subdivision in accessing rear driveways and in driving around to the front of their homes; and

(C) Means of mitigation, including but not limited to additional mid-block alley turnouts, limitation on the number of lots to be served along a single alley segment, points of access, and additional fire protection measures.

(4) Intersections

Alley intersections shall be perpendicular and at a 90-degree angle or radial to the intersecting alley centerline for the full alley right-of-way width. Intersection pavement design shall be of sufficient width and inside radius to accommodate waste collection and emergency vehicles. Intersections shall be three-way wherever possible, and four-way intersections shall be avoided. No alley intersection serving more than four directions shall be allowed.

Sec. 9.02.084. Easements

(a) Width of Easements

(1) Utility

The minimum width for utility easements shall be in accordance with the standards outlined in the design standards and shall be adequate for the installation and maintenance of utilities that are likely to be located in the easement.

(2) Drainage

The minimum width for City drainage easements shall be as required by the Director of Development Services and City Engineer.

(3) Storm Drainage or Floodway

Where a subdivision is traversed by a watercourse, drainageway, or channel, there shall be provided a storm drainage easement or right-of-way conforming substantially with such course and of such additional width as may be designated by the Director of Development Services and City Engineer, subject to determination according to proper engineering considerations. The required width shall conform to the requirements set forth by the Federal Emergency Management Agency (FEMA), the U.S. Army Corps of Engineers, and/or the City. Parallel streets or parkways are encouraged adjacent to certain portions of creeks or drainageways to provide maintenance access and/or public access and visibility into public open space or recreation areas. Utilities may be permitted within a drainage or floodway easement only if approved by the Director of Development Services, City Engineer, and any other applicable entity requiring the drainage or floodway easement.

(4) Other

The width of easements for other utility providers, such as for gas, electric, telephone, or cable television, shall be as required by that particular entity. It shall be the developer's responsibility to determine appropriate easement widths required by other utility companies.

(b) Location of Easements

Easements shall be located to accommodate the optimal design (as determined by the City) of the various utility and drainage systems that will serve the subdivision, and shall be provided in locations to accommodate any public purpose deemed necessary to protect the public health, safety, and welfare. In residential subdivisions, where alleys are not provided, a minimum 10-foot wide utility easement shall be provided along the front of all lots, adjacent to and flush with the street right-of-way line for the potential placement of utility facilities.

(c) Computation of Lot and Buildable Area

A lot's area shall be computed inclusive of all easements. However, there shall be a minimum buildable area, exclusive of required easements, buffer zones, and setbacks for each lot. The minimum buildable area shall be an area one half of the required minimum lot size. If the City disputes the buildable area of any lot, the developer shall submit verification in writing that the buildable area is adequate for the type of housing product (or nonresidential building) proposed for that lot. Final approval of the allowed buildable area for any lot shall be by the City.

(d) On-Site Easements Shown on Plat

For new development, all necessary on-site easements and off-site easements shall be established on the plat and not by separate instrument, and they shall be labeled for a purpose, such as for franchised public utilities. Other examples include, but are not limited to, the following: a drainage easement, which is dedicated to the City for a drainage structure; an access easement, which is dedicated to the public for unrestricted access purposes; a fire lane easement, which is dedicated to the City and its fire suppression and emergency medical service providers for access purposes; and an electrical, gas, or telephone easement which is dedicated to the specific utility provider that requires the easement.

(e) Visibility of Easements

(1) Type of Intersection

Whenever an intersection of two or more public rights-of-way occurs, a triangular visibility area shall be created. The visibility easement for each type of intersection shall be as follows:

(A) Intersection of two arterial streets: 40 feet from the intersection right-of-way;

(B) Intersection of a collector or local street onto an arterial street: 25 feet from the intersection right-of-way;

(C) Intersection of two collector or local streets (or one of each): 25 feet from the intersection right-of-way; and

(D) Intersection of two alleys: 20 feet from the intersection right-of-way.

(E) Intersections larger than local to local intersections: Visibility easements shall be based on the sight visibility triangles based on stopping sight distance. (Diagram C of division 9 of this article)

(2) Fixed Items

The maximum height of fences, walls, signs, and other similar fixed items shall be thirty (30) inches within the visibility easement.

(3) Landscaping

All landscaping (and any other fixed feature) within the triangular visibility area shall be designed to provide unobstructed cross-visibility at a level between thirty (30) inches and ten (10) feet. Trees adjacent to this visibility area shall be trimmed in such a manner that no limbs or foliage extend into the cross-visibility area. Landscaping, except grass and low ground cover, shall not be located closer than three (3) feet from the edge of any street pavement.

Sec. 9.02.085. Blocks

(a) Determination

The length, width and shapes of blocks shall be determined with due regard to the following:

(1) Provision of adequate building sites suitable to the special needs of the type of use contemplated;

(2) Zoning requirements as to lot sizes, setbacks and dimensions (if within the City's corporate limits); and

(3) Needs for convenient access, circulation, control and safety of street traffic and for pedestrians or bicyclists traveling to a public park or school site or other facility within or close to the neighborhood.

(b) Lengths and Widths

Intersecting streets, which determine the lengths and widths of blocks, shall be provided at such intervals as to serve cross-traffic adequately, to provide adequate fire protection, and to conform to customary subdivision practices. Where no existing subdivision or topographical constraints control, block lengths shall be in accordance with section 9.02.081(o) of this article. However, in cases where physical barriers or property ownership creates conditions where it is appropriate that these standards be varied, the length may be increased (through issuance of a waiver/suspension by the City Council) or decreased to meet the existing conditions having due regard for connecting streets, circulation of traffic and public safety.

Sec. 9.02.086. Sidewalks.

(a) Provided In Residential and Nonresidential Areas

(1) Pedestrian concrete walkways (sidewalks) not less than the following width shall be provided along both sides of newly constructed streets as follows:

Street Type	Sidewalk Width
Arterial	6 feet
Divided and undivided collector	6 feet
Neighborhood collector	6 feet
Local residential	6 feet

(2) Construction standards for sidewalks shall be as set forth in the City's design standards.

(b) Provided Along Perimeter Streets

(1) All sidewalks along a perimeter street are considered part of the overall development's required public improvements. A certificate of occupancy will not be issued for any lot within the subdivision until the required sidewalks are in place or appropriate surety is provided.

(2) The cost and provision of any perimeter sidewalks, such as along major thoroughfares, may be escrowed as a part of a subdivision improvement agreement, if approved by the City Council. The City has the right to refuse escrow and to require paving of the sidewalks if, in its sole opinion, immediate provision of the sidewalks is necessary for safe pedestrian circulation or if it would otherwise protect the public health, safety, convenience or welfare.

(c) Pedestrian Access

The City may require, in order to facilitate access from the streets and streets to schools, parks, playgrounds or other nearby streets, perpetual unobstructed easements of up to 15 feet in width. The improved pedestrian surface that provides such access must be within the easement.

Sec. 9.02.087. Lots

(a) Requirements of the Zoning District if Applicable

Lots shall conform to the minimum requirements of the established zoning district, if located within the City's corporate limits.

(b) Minimum Frontage on A Public Street

Each lot on a subdivision plat shall front onto a dedicated, improved public street, unless platted as an approved private street subdivision in accordance with these subdivision regulations. All lots shall have a minimum of 40 feet of frontage along the property line of a dedicated, improved street unless other provisions have been authorized under Article 9.04 or an approved planned development district.

(c) Irregularly Shaped Lots

Irregular-shaped lots shall have sufficient width at the building line to meet lot width and frontage requirements of the appropriate zoning district (if within the City's limits). Such lots shall also provide a reasonable building pad without encroachment into front, side, or rear yard setbacks or into any type of easement. Also, the rear width shall be sufficient to provide access for all necessary utilities, including access for driveways when alleys are present (minimum 20-foot alley frontage). In general, triangular, severely elongated or tapered, "flag" or "panhandle" lots shall be avoided, and the City reserves the right to disapprove any lot which, in its sole opinion, will not be suitable or desirable for the purpose intended, which is an

obvious attempt to circumvent the purpose and intent of lot configuration or lot width minimums, or which is so oddly shaped as to create a hindrance to the logical lot layout of surrounding properties.

(d) Side Lot Lines

Side lot lines shall be at 90-degree angles or radial to street right-of-way lines to the greatest extent possible. The City reserves the right to disapprove any lot which, in its sole opinion, is shaped or oriented in such a fashion as to be unsuitable or undesirable for the purpose intended, or that is not appropriately oriented toward its street frontage.

(e) Double Frontage Lots

Residential subdivisions with double frontage lots shall be avoided, except where they may be essential to provide separation from arterial or collector streets, or to overcome a specific disadvantage or hardship imposed by topography or other factors. Where lots have double frontage, appropriate building setback lines shall be established for each street side, and rear yard screening shall be provided in accordance with Section 9.02.167 of this Article. Except as provided within this subsection, residential lots shall not back onto any residential street or collector street within a residential area or neighborhood, and shall not have more than 1/2 of their perimeter boundaries along streets.

(f) Residential Corner Lots

(1) Corner lots with a width less than 65 feet are to be at least five feet wider than the average of interior lots in the block. Corner lots with a width less than 75 feet adjacent to an arterial or collector roadway (rights-of-ways greater than 60 feet) shall be at least 15 feet wider than the average of interior lots in the block.

(2) Where corner lots are key lots, the corner lot shall have a front building line on both streets, unless said key lot is separated from other lots by a dedicated street or alley.

(3) Where corner lots are also double frontage lots, consideration shall be given to providing adequate width and depth to ensure that adequate site visibility is provided at the rear corner intersection.

(g) Residential Lot Depth

(1) No lot shall be platted less than 100 feet in depth unless located within the Mixed Density Residential (MD) district, the Downtown (DT) district, or districts where minimum lot depth is N/A.

(2) Lots facing or backing on arterial or collector roadways (rights-of-way greater than 60 feet), shall be at least 10 feet deeper than the average depth of lots facing on the local streets within the development. This depth is in addition to the minimum 20-foot-wide landscape buffer requirement for residential developments when adjacent to arterial and collector roadways.

(h) Computation of Lot and Buildable Area

A lot's area and buildable area shall be computed as outlined in Section 9.02.084(c).

Sec. 9.02.088. Building Lines

(a) Platting

Front building lines shall be shown on all plats (i.e., all types) for all lots.

(b) Requirements in City

For property that is within the City, building lines shall be consistent with the zoning ordinance requirements for the district in which the development is located and with any other applicable City ordinance.

(c) Requirements in Extraterritorial Jurisdiction

For property that is within the City's extraterritorial jurisdiction, the minimum front building line for all lots (residential or nonresidential) shall be 25 feet.

Sec. 9.02.089. Utility Services Not Provided by City

(a) Meanings

For the purposes of this section of the code, the following terms, phrases, words, and their derivatives shall have the meanings given herein. Definitions not expressly prescribed herein are to be determined in accordance with customary usage in municipal planning and engineering practices. Words used in the present tense include the future, words in the plural number include the singular number, and words in the singular number include the plural. The word "shall" is deemed as mandatory. The word "may" is deemed as permissive.

Feeder or feeder/lateral line

means high voltage supply electric lines carrying more than 69,000 volts that emanate from substations used to distribute power through an area to an unspecified number of customers.

Lateral lines

means those electric or telephone lines used to distribute service from a feeder line to a single subdivision. These electric lines are normally connected to a feeder line through a sectionalizing device such as a fuse.

Service lines

means those lines used to connect between the utility's system or lateral lines and the end user's meter box.

Utility services

means the facilities of any person, firm or corporation providing electric, natural gas, telephone, cable television, internet, or any other such item or service for public use approved but not provided by the City.

(b) Provision For Utility Services

(1) All subdivision plats and engineering plans submitted to the City for approval shall provide for utility services such as electrical, gas, telephone and cable television utility lines, including lateral or service distribution lines, and wires to be placed underground. Feeder and other major transmission lines may remain overhead within the appropriate easements. There shall be provided at street intersections underground conduits as approved by the City Engineer for utility public road right-of-way crossings. There shall be no other utility road crossings except as authorized by the Public Works Director or City Engineer. No utilities except those of the City may be installed in the rights-of-way of public roads except as provided in the City's regulations governing management of public rights-of-way set forth in article 10.03 of this code.

(2) Feeder Lines

(A) An applicant shall endeavor and, whenever practical, the City shall require that feeder lines are placed away from major or minor collectors or arterials, as shown on the comprehensive plan.

(B) Whenever practical, feeder lines which are to be placed overhead shall not be placed along both sides of the street right-of-way.

(3) Utility Companies

(A) The locations, widths and configurations of easements for any utility service provider other than the general utility easements dedicated to the City shall be determined, approved and acquired (if necessary) by the applicable utility service provider.

(B) Each of the utility companies shall be responsible for developing administrative policies, criteria for easement size, and cost reimbursement procedures for the installation and extension of their underground utilities.

(C) Nothing herein shall prohibit or restrict any utility company from recovering the difference in cost of overhead facilities and underground utilities from the developer in accordance with the provisions of such utility's approved tariff.

(D) No utility company shall be required or permitted to begin construction of underground facilities unless and until the developer of the subdivision has made arrangements satisfactory to the specific utility company for the payment of such difference between the cost of overhead facilities and underground facilities.

(c) Electrical and Telephone Support Equipment

All electrical and telephone support equipment, including amplifiers and switching devices necessary for underground installations, shall be pad- or ground-mounted, or shall be placed underground and not overhead, unless the subdivision is served from perimeter overhead electrical facilities.

(d) Temporary Overhead Lines And Facilities

Temporary construction service may be provided by overhead electric lines and facilities without obtaining a waiver/suspension or special exception, provided that when the underground utility service to any portion of a subdivision is completed, such overhead electric lines and facilities are promptly removed.

(e) Existing Facilities

Nothing in this section shall be construed to require any existing facilities in place prior to the effective date of these subdivision regulations to be placed underground.

(f) Metering

The metering for utilities such as water, gas and electricity shall be located on the individual lots to be served, not grouped together in a centralized location(s), such as "gang-box" style metering stations, unless specifically authorized by the Public Works Director.

(g) Inspection By the City and Conformance with City Standards

All utility installations shall be subject to inspection by the City, and shall be in conformance with any applicable City ordinance (including the design standards and management of public rights-of-way) related to their placement within public rights-of-way, within easements, or elsewhere in the City (including on private property).

(h) Location of Utilities Within Easements and Rights-of-Way

The City may designate or assign locations for the installation of utilities within easements or rights-of-way dedicated to the City.

(i) Required Utilities

No building permit shall be issued until all lots within any subdivision shall have readily available electricity, and telephone service.

Sec. 9.02.090. Water and Wastewater Facility Design

(a) Connections for Water

All new subdivisions shall be connected with the City's water system or other public water supply system approved by TCEQ. The water system shall be capable of providing water for health and emergency purposes, including fire protection. The design and construction of water system shall comply with the following standards:

(1) Applicable regulations of the Texas Commission on Environmental Quality (TCEQ).

(2) Standards in the City's design standards.

(3) Fire protection and suppression standards in accordance with the City's policies and ordinances including fire code adopted by the City.

(b) Connections for Wastewater

(1) All new subdivisions shall be served by a wastewater collection and treatment system authorized and permitted by the TCEQ, except as provided below. The design and construction of the wastewater system improvements shall be in accordance with the standards in the City's design standards, and in accordance with TCEQ standards.

(2) On-site sewage facilities such as septic or aerobic systems may be permitted by the Commission and City Council in subdivisions where each lot is one acre or more in area, if the subdivision is 1,000 feet or more from a connection to a wastewater collection system. The approval of an on-site sewage disposal facility by the Commission and City Council is not mandatory but rather discretionary.

(3) Exceptions to the lot size regulations in subsection (2) above may be approved by the Commission and City Council for properties existing on the effective date of these subdivision regulations that are less than one acre, and for residential cluster or conservation developments that group residential properties in the proposed subdivision closer together and that preserve at least 1/2 of the land in the subdivision for open space, recreation or agriculture.

(c) Subdivider Responsibilities

The subdivider shall be responsible for the following:

(1) Phasing of development or improvements in order to maintain adequate water and wastewater services;

(2) Extensions of utility lines (including any necessary on-site and off-site lines) to connect to existing utility mains of adequate capacity;

(3) Providing and/or procuring all necessary easements for the utilities (whether on-site or off-site);

(4) Providing proof to the City of adequate water and wastewater service;

(5) Providing for future expansion of the utilities if such will be needed to serve future developments, subject to the City's oversize participation policies (refer to sections 9.02.004 and 9.02.011 and section 9.02.202(c) of this article for information on adequate facilities and proportionality of developer participation), if applicable;

(6) Providing all operations and maintenance of the private utilities, or providing proof that a separate entity will be responsible for the operations and maintenance of the utilities;

(7) Providing all fiscal security required for the construction of the utilities;

(8) Obtaining approvals from the applicable utility providers if other than the City; and

(9) Complying with all requirements of the utility providers, including the City.

(d) Location of Lines

Extension of water and wastewater lines shall be made along the entire frontage of the subdivision adjacent to a street or thoroughfare in rights-of-way or dedicated easements.

(1) If the subdivision is not adjacent to a thoroughfare, the extension of utilities shall be accomplished in such a manner as to allow future connections to said utilities by new subdivisions.

(2) If new subdivisions are not likely to be developed beyond the proposed subdivision (due to physical constraints), the Director of Development Services and City Engineer may waive the requirement for adjacent utility line construction at the time of preliminary plat approval and prior to construction of the subdivision.

(3) The City shall determine the location and routing of water and sewer extensions and shall retain the authority to reject any extension not deemed to be in the best interest of the City.

(e) Utilities Not Specified

Installation, operations and maintenance of utilities not specifically referenced herein shall comply with regulations of the TCEQ and with any other applicable state rules and regulations, whichever is the most stringent.

(f) Dead-End Water Lines

(1) Dead-end water lines should be avoided, but when deemed necessary, they should be extended to, and then through, the property sought to be subdivided.

(2) All dead-end water lines shall be valved and provided with a valve and fire hydrant located at the extreme end of the line instead of the blow-off mechanism for their flushing, in accordance with current City standard specifications.

(g) Payment of Pro-Rata Charges

Where the proposed subdivision would abut and utilize an existing water main and/or sanitary sewer main of the City, the developer shall pay to the City any applicable “pro-rata” charge per requirements of the City or previous pro-rata agreement.

Sec. 9.02.091. Storm Water Collection and Conveyance Systems

(a) Drainage System Generally

(1) Drainage improvements shall accommodate runoff from the upstream drainage area and shall be designed to prevent overloading the capacity of the downstream drainage system or adversely impacting either upstream or downstream properties.

(2) The City may require the phasing of development, the use of control methods such as retention or detention, or the construction of off-site drainage improvements in order to mitigate the impact of the proposed development.

(3) No storm water collection system shall be constructed unless it is designed in accordance with this section and with the City’s design standards by a licensed professional engineer, and unless it is reviewed and approved by the City Engineer.

(4) All plans submitted to the City Engineer for approval shall include a layout of the drainage system together with supporting calculations for the design of the system.

(b) Drainage Easements Clear

Drainage easements shall be kept clear of all obstructions, such as but not limited to, fences, buildings, trees and shrubs, or other structures or improvements which in any way endanger or interfere with the construction, maintenance, or operation of any drainage system.

(c) Off-Site Drainage

(1) The property owner to be developed shall be solely responsible for all storm drainage flowing on or from the property owner's property. This responsibility includes the drainage directed to that property by prior development as well as drainage naturally flowing through the property by reason of topography.

(2) Adequate consideration shall be given by the property owner in the development of property to determine how the discharge leaving the proposed development will affect downstream property. As part of any application by a property owner for development that will affect downstream property, the property owner shall furnish the City with a letter signed by a Texas professional engineer stating that the development as designed will not damage downstream property due to the development's impact on off-site drainage.

(3) On lots or tracts of three acres or more where storm water runoff has been collected or concentrated, it shall not be permitted to drain onto adjacent property except in existing creeks, channels or storm sewers, unless proper drainage easements or notarized letters of permission from the affected property owner are provided.

(d) Cross-Lot Drainage Prohibited

Drainage between residential lots is the responsibility of the affected property owner(s). Property owners are required to drain surface runoff from an individual lot to a public right-of-way or to an underground drainage system contained in a public easement and will not be allowed to surface drain onto another lot. The City Manager shall have the discretion to allow modifications to the lot-to-lot drainage requirements where adherence to these requirements would be in conflict with other City ordinances and/or regulations.

(e) Erosion And Sedimentation Control

All erosion and sedimentation controls shall conform to the design standards and the current National Pollution Discharge Elimination System (NPDES) regulations.

(f) Changing Existing Ditch, Channel, Stream or Drainageway

No person, individual, partnership, firm or corporation shall deepen, widen, fill, reclaim, reroute or change the course or location of any existing ditch, channel, stream or drainageway without first obtaining written permission of the City Engineer and any other applicable agency (such as FEMA or the U.S. Army Corps of Engineers) having jurisdiction. The City Engineer may require preparation and submission of a CLOMAR, LOMR, other appropriate map revision or flood study for a proposed development if there are concerns regarding storm drainage on the subject property or upstream or downstream from the subject property. The costs of such study, if required, shall be borne by the developer.

(g) Siting Of Lots and Building Sites

In order to help reduce storm water runoff, and resulting erosion, sedimentation and conveyance of nonpoint source pollutants, the layout of the street network, lots and building sites shall, to the greatest extent possible, be sited and aligned along natural contour lines, and shall minimize the amount of cut and fill on slopes in order to minimize the amount of land area that is disturbed during construction.

(h) Approval

Lots in any proposed subdivision shall not be approved until drainage facilities adequate to prevent flooding have been installed or necessary arrangements made for such installation as required under these subdivision regulations.

(i) Issuance of Building Permits

On any lot designated by the City Engineer as requiring completion or partial completion of drainage improvements prior to building construction, no building permits shall be issued prior to a release authorized by the Director of Development Services.

Sec. 9.02.092. Extension of Service of Utilities and Pro-Rata Agreements

(a) Definitions

For the purposes of this section, the following definitions shall apply unless the context clearly indicates or requires a different meaning:

Associated Facility

An apparatus or improvement that is used in conjunction with a water or wastewater line that provides water or wastewater service to a tract of land, regardless of where the associated facility is located. The term includes but is not limited to a lift station, a force main, a pump station, a storage tank, or an addition to an existing facility that increases the capability of the existing facility to provide water or wastewater service.

Developer

The person, business, corporation or association responsible for the development of a lot, parcel or tract, and includes the property owner or subdivider.

Oversize or Oversizing

With reference to a water or wastewater line or an associated facility, means an increase in the size or capacity of the line or associated facility above the standard size, including fire flow requirements, that is necessary to provide complete utility service to a particular development. With respect to any associated facility, “oversize” or “oversizing” means the size or capacity in excess of the size or capacity that would otherwise be necessitated by the particular development as determined by the City Engineer.

Pro-Rata Fee

A charge made against a lot, tract or parcel for the purpose of reimbursing the City or a developer a proportionate share of the service extension costs for extending a water or wastewater line and associated facilities that serve the property against which the charge is made.

Service Extension

A water or wastewater line or an associated facility that is necessary to extend water or wastewater service from a major City transmission main or collection main to a tract of land and across the tract or frontage of the tract to a point determined by the City Engineer to be consistent with further service extensions of the City, provided that the extension does not extend beyond the property boundaries of the tract.

Service Extension Application

A request in writing to the City for extension of water or wastewater service to a development.

Service Extension Contract

A legal document that defines the responsibilities and requirements of the entity requesting a service extension and the City with regard to the service extension. A service extension contract may be required at the sole discretion of the City.

Service Extension Costs

The total costs of any off-site service extension, as initially determined by the City's engineer, including but not limited to costs of land/easement acquisition, design and construction costs, and any permitting or administrative fees required for such extension, but not including amounts expended solely for oversizing.

Standard Size

With respect to a water or wastewater line, the standard size means an eight-inch diameter line. With respect to any associated facility, the standard size is the size or capacity needed to serve a particular development as determined by the City Engineer.

Water or Wastewater Line

A necessary appurtenance to a water distribution or wastewater collection system. The term includes a valve, manhole, connection, air release, diversion, and other equipment necessary to make the water distribution or wastewater collection system operable in compliance with the design criteria and standards of the City.

(b) Responsibilities of Developer; Application

(1) The developer shall extend all water and wastewater lines and associated facilities needed to connect the development or land use with the City's approved water distribution system and wastewater collection system. The developer shall further extend all lines across the property currently being developed or to the point on such property from which such lines will be extended to serve adjoining land as determined by the City. As a condition of acceptance of water or wastewater lines, the City may require conveyance of an easement across the property currently being developed as well as other contiguous property owned by the developer for purposes of future extension of the water or wastewater lines. All initial service extension costs and all initial costs of oversizing, shall be borne by the developer or property owner, subject to reimbursement from proceeds of pro-rata fees or cost participation pursuant to subsections (j) and (k) of this section. Requests for extension of water and wastewater lines shall be as provided for in this section.

(2) A service extension application is required to:

(A) Connect a tract of land to the existing City system; or

(B) Provide utility service to a tract of land if an existing line or associated facility is unsuitable or insufficient to provide service to the tract.

(3) A developer or property owner must submit an application for a service extension to the City Engineer.

(4) An application for a service extension must:

(A) Include a general description of the location, size, and capacity of the service extension; and

(B) If within the City's ETJ, be accompanied by an irrevocable petition to the City for voluntary annexation at such time and under such conditions as deemed appropriate by the City.

(5) If either water or wastewater service is to be provided by an entity other than the City, the application must be accompanied by evidence of a commitment from the other entity to provide the other required service. The evidence must be in the form of:

(A) A contract with the entity;

(B) A letter from the entity; or

(C) The minutes of the relevant meeting of the governing body of the entity.

(c) Administrative Approval

(1) The City Manager may approve an application or contract for a service extension if:

(A) The requested service extension does not include a request for establishment of pro-rata fees or cost participation by the City; and

(B) The City Manager determines that sufficient capacity exists or will be available to meet the projected demands of the development or land use to be served.

(2) If a requested service extension includes a request for establishment of pro-rata fees or cost participation by the City, or if the City Manager does not determine that sufficient capacity exists or will exist, the application must be processed under subsections (l) and (m) of this section and requires a service extension contract.

(d) Construction Standards; Submission of Construction Plans

(1) After a service extension application or service extension contract has been approved, an applicant must submit the construction plans for needed improvements to the City Engineer for review and approval of the size, capacity, and routing of the improvements.

(2) The City Engineer may approve the size, capacity, or routing of an improvement only if it complies with generally accepted engineering practices and each applicable City requirement.

(3) Water and wastewater lines shall be oversized where needed to provide capacity to other existing or new developments in the area to be served in order to avoid duplication of facilities, in conformity with the City's generally accepted engineering practices.

(4) The location and size of all water and wastewater lines necessary to serve land to be developed shall be in accordance with the City's generally accepted engineering practices and in accordance with the City's subdivision regulations.

(5) When an existing water or wastewater line provides service to a proposed development, the developer shall pay all applicable pro-rata fees pursuant to subsection (m) or (o) of this section for the water line or wastewater line before extension of or connection to such main is made.

(e) Submission of Additional Information

An applicant for a service extension shall provide information determined by the City Engineer to be necessary to demonstrate that construction of the service extension complies with the requirements of the City.

(f) Expiration of Approval

(1) Unless extended under subsection (2) or (3), the approval of a service extension application remains valid until the latest of:

(A) The date on which the preliminary plat expires for the property to be served by the service extension; or

(B) The second anniversary of the date on which the service extension application was approved, if on or before that date:

(i) A preliminary plat for the property to be served has not been approved; and

(ii) Construction of the service extension has not begun; or

(C) The date established in the service extension contract.

(2) If construction of a service extension begins before the approval expires under subsection (1), the City Manager may extend the approval of a service extension for the period of time estimated to be necessary to complete construction of the service extension.

(3) Under this section, if the approval of a service extension requires a service extension contract:

(A) Construction of the service extension shall not begin until fiscal security is posted or money is deposited in compliance with subsection (g) of this section; and

(B) The service extension approval is extended until construction of the service extension is complete and the City accepts the lines and associated facilities constructed under the contract.

(g) Fiscal Security

(1) For construction contracts administered by the City, fiscal security in an amount approved by the City Engineer to be equal to 100% of the estimated service extension costs and 100% of the costs of any oversizing, must be deposited in cash with the City prior to entering into a construction contract.

(2) For construction contracts administered by a party other than the City, the fiscal security must be posted prior to the execution of a construction contract and must be in the form of:

(A) An irrevocable letter of credit that has a minimum term of three years and is acceptable to the City;

(B) A performance bond; or

(C) A cash deposit.

(h) Hardship Policy for Extension to Single Dwelling Unit

(1) The City may, at its expense and in its sole discretion, upon written request of a property owner, extend a water or wastewater line of a size determined by the City to serve a single dwelling unit if funds are available to pay the cost of installing the line and the extension meets the standards in subsection (2).

(2) The person requesting the extension must demonstrate that:

(A) A substantial hardship would result if the extension is not made;

(B) Denial of the extension would result in potential water quality degradation; and

(C) The extension is necessary to provide like benefits as normally provided to similarly served property.

(3) The City may require that the property owner making the request share in the service extension costs, and that the property owner grant all necessary easements to continue line extensions to serve adjoining land.

(4) This policy has no application to circumstances in which multiple connections are requested or necessary to serve existing or proposed development, or in which the City determines to initiate construction of a water or wastewater line or associated facility that serves multiple users. This policy may not be invoked to finance serial connections to lots in an existing subdivision.

(i) Eligibility for Pro-Rata Fees

A developer that agrees to construct a water or wastewater line or an associated facility that on acceptance will become part of the City's water and wastewater system and which supplies capacity to other existing or new developments, and that is not a facility or a portion of a facility included on the capital improvements plan for water or wastewater facilities, may apply to the City to establish pro-rata fees to be paid by other

users of the facilities and to reimburse the developer a proportional amount of the service extension costs. The developer also may apply for cost participation by the City for the costs of oversizing water or wastewater lines or associated facilities in excess of the standard size.

(j) Calculation of Pro-Rata Fees

(1) The amount of the cost reimbursement for an extension, if any, shall be computed as the off-site length of a water or wastewater line that has been extended by a developer multiplied by the then-current average cost, per linear foot, of the service extension costs, as determined by the City Engineer. The amount of the pro-rata fee based upon such computation shall be established for each side of the line to which connections are to be made. For mains that can be connected to from both sides, the fee for each side shall be equivalent to 1/2 of the average linear foot cost referenced above, multiplied by the length of the water or wastewater line on or abutting the property being charged. For mains that can be connected to from one side only, the fee shall be equivalent to the average linear foot cost referenced above, multiplied by the length of the line on or abutting the property being charged.

(2) In the alternative, the developer may apply for a different cost reimbursement formula, based upon engineering cost estimates of the service extension costs agreed upon in writing by the City Manager and the applicant, and verified in a study provided by the applicant approved by the City Engineer. The study shall aggregate the costs of associated improvements where feasible. The City may establish guidelines for eligible costs to administer the policy in this section. The amount of the pro-rata fee shall be that calculated in the approved study. The study shall contain the following minimum elements:

(A) Identification of the area and all properties to be served by the water or wastewater lines or associated facilities to be installed;

(B) Identification of the costs of the facilities to be installed;

(C) Apportionment of the costs of the facilities to be installed among lots, tracts or parcels to be served by the improvements, based upon capacity to be utilized by such properties, using accepted engineering standards and practices;

(D) Calculation of the maximum amount of the costs which are to be reimbursed to the developer or property owner, net of costs attributable to the developer's or property owner's utilization of capacity of the lines or associated facilities; and

(E) Calculation of a pro-rata fee to be charged per unit of land that is to be connected to the water or wastewater lines or associated facilities.

(3) In making the initial determination of appropriate pro-rata fees under subsection (1) or (2), above, the City Engineer shall certify in writing that the amount of the pro-rata fee is roughly proportionate to the impact that the properties to be charged will have on the City's water and wastewater utility system.

(4) After construction of off-site improvements by a developer that are subject to reimbursement from pro-rata fees, but before the City's acceptance of such improvements, the City Engineer may request, and the developer shall be required to promptly supply, verifiable proof of the actual costs expended as to all such off-site improvements. If the actual costs to complete such improvements–including but not limited to costs of land/easement acquisition, design and construction costs, and any permitting or administrative fees required for such extension, but not including amounts expended solely for oversizing–are less than the City Engineer's initial determination of the service extension costs under subsection (1) or (2), above, then the amount of pro-rata fees as relates to those improvements shall be decreased to correspond to said actual costs.

(k) Cost Participation for Oversized Lines

The City may participate in the reasonable construction costs of oversizing water or wastewater lines that exceed the standard size of a water or wastewater line, and/or associated facilities. The developer initially shall be responsible for the entire cost of the oversized facilities. City oversize participation shall be in accordance with this section and any applicable provisions of the City's subdivision or other regulations. The City in its sole discretion shall determine the amount of any cost participation based on engineering estimates of the costs attributable to the increase in the size of lines exceeding the standard size, taking into consideration the degree to which the need for such oversizing is created by the development for which service extension is being requested. In no event may the City be required to participate in the costs of oversize facilities pursuant to this section if there are no funds available for such purposes.

(l) Contract Required

(1) The applicant for approval of a service extension must request the establishment of pro-rata fees or cost participation in writing at the time the applicant applies to the City Manager for approval of the service extension. If the applicant for approval of a service extension requests establishment of pro-rata fees or cost participation, a written service extension contract is required.

(2) The service extension contract shall include at a minimum the pro-rata fee and cost participation, if any, approved by the City, the duration of the right to collect pro-rata fees, and provisions for forfeiture of such fees to the City in the event they are not collected by the contracting party, his or her successor-in-interest, or assignee.

(3) An executed service extension contract may be assigned by the party requesting service extension with the written consent of the City, which shall not be unreasonably withheld.

(m) Review and Approval; Collection of Pro-Rata Fees

(1) The City Manager shall review each request for cost reimbursement from pro-rata fees or cost participation for oversizing lines.

(2) The City Manager shall formulate his or her recommendation concerning the cost reimbursement from pro-rata fees or cost participation for oversizing lines, which shall address each of the following minimum criteria:

(A) The line to be extended has not been included on the impact fee capital improvements plan for that category of capital improvement;

(B) The size of each proposed line or facility complies with the generally accepted engineering practices and other planning criteria of the City and final design and routing will comply with the technical standards;

(C) Any alternative study proposing pro-rata fees fairly apportions the extension costs among prospective users of the facilities to be installed;

(D) The proposed line or facility is a reasonable extension or addition to the water and wastewater utility system; and

(E) Funds for participation in the costs of oversizing lines are available from an identified source of funds or funds will be available to meet the proposed payment schedule.

(3) The City Manager shall forward his recommendation on pro-rata fees and cost participation, together with the proposed service extension contract, for decision by the City Council.

(4) Upon approval of the request for reimbursement from pro-rata fees, any developer or user of property with frontage along the off-site portion of the water or wastewater line or of property that is identified in

the approved fee study thereafter that connects to or utilizes the capacity of the water or wastewater line or associated facility for which a pro-rata fee has been established shall pay the applicable fee. Pro-rata fees shall be collected by the City from the developer or user before approval of the engineering plans for the development required to pay the fee, or before connection to the water or wastewater line for which the fee has been established, whichever first occurs.

(n) Conditions

(1) A developer constructing a water or wastewater line or an associated facility that is eligible for cost reimbursement from pro-rata fees or cost participation for oversizing may not receive cost reimbursement payment for the line or facility unless the entity complies with each requirement or regulation of the City relating to:

(A) The public advertising of the line or facility;

(B) The bidding on the line or facility;

(C) A performance or payment bond for the line or facility; and

(D) A warranty on the line or facility.

(2) The developer constructing the line or facility is not entitled to receive a cost reimbursement payment from pro-rata fee proceeds or cost participation for oversizing lines until the entity submits documentation showing the entity's compliance with each requirement described by subsection (1) and the line or facility is accepted in writing by the City.

(o) Payments to Developer

(1) For projects subject to a service extension contract approved by the City by April 1 of any year, the City shall pay the developer holding the extension contract any eligible cost reimbursement for oversizing, without interest, within 60 days of completion and acceptance of the project by the City, but no earlier than the following September 1.

(2) For projects for which a service extension contract is approved by the City after April 1 of any year, the City shall pay the developer holding the extension contract any eligible cost reimbursement for oversizing, without interest, for a completed and accepted project within 60 days of completion and acceptance of the project by the City but no earlier than September 1 of the next calendar year.

(3) For a period of 15 years following the City's acceptance of the water line, wastewater line, or associated facility, the developer shall be entitled to reimbursement from the proceeds of the pro-rata fees established pursuant to this section, up to the maximum amount of the reimbursement established in the approved extension contract. The City may deduct 2% of the amount of pro-rata fees collected from the amount of the fees reimbursed to the developer as an administration fee.

(4) Pro-rata fees which have been collected pursuant to the service extension contract shall be paid to the developer annually no later than October 1 of each year, until the term of the agreement expires.

(5) The City may establish one or more pro-rata fee accounts for purposes of administering the policies of this code. The City shall deposit all pro-rata fees collected pursuant to this division into such account(s). Expenditures from such accounts shall be earmarked solely for reimbursement of developers for the installation of water lines or wastewater lines or associated facilities for which pro-rata fees have been established pursuant to this division.

(6) It shall be the responsibility of the service extension contract holder or his assignee to provide to the City in writing current contact information. The City will mail reimbursement payments to the last contact of record reflected on its books. In the event that the service extension contract holder or his assignee has

not collected pro-rata payments or cost participation in oversize lines sent to the contact of record for a period of one year from the date such payments are due pursuant to this section, such accrued amounts shall become the funds of the City for purposes of expenditure on cost participation for oversizing lines or other system improvements in the City's sole discretion.

(p) Pro-Rata Fees for City Projects

(1) The City may initiate capital projects from time to time involving construction of water or wastewater lines or associated facilities, and may seek to recoup its costs through establishment of pro-rata fees.

(2) Prior to establishing fees, the City shall either compute fees based upon a per average linear foot formula similar to the formula described in subsection (j)(1) of this section or pursuant to a study that satisfies the requirements of subsection (j)(2) of this section. The City Council shall establish pro-rata fees based upon the front footage formula or alternative study.

(3) Following establishment of pro-rata fees by the City Council, the developer or user of property with property frontage on the extended water or wastewater line or of property that was identified in the approved pro-rata fee study thereafter that connects to or utilizes the capacity of the water or wastewater line or associated facility for which a pro-rata fee has been established shall pay the applicable fee. Pro-rata fees shall be collected by the City from the developer or user before approval of the engineering plans for the development required to pay the fee, or before connection to the water or wastewater line for which the fee has been established, whichever first occurs.

(4) Pro-rata fees established under this section may be collected for a period of 15 years following final construction by the City of the water line, wastewater line, or associated facility.

§ 9.02.093 through § 9.02.130. (Reserved)

Division 4. PUBLIC SITES AND OPEN SPACES

Sec. 9.02.131. Areas for Public Use

(a) The applicant shall give consideration to suitable and adequate sites for schools, parks, playgrounds, and other areas for public use or service so as to conform with the recommendations contained in the City's comprehensive plan, including the park master plan, and other applicable plans. Any provision for parks or other public facilities shall require approval by the City Council.

(b) A minimum of five (5) parking spaces will be required at major, neighborhood focal points that are for public use (such as but not limited to pools, amenity centers, parks, and playgrounds). If the major features are adjacent to each other, they can share a parking lot with a minimum of eight (8) parking spaces instead of ten (10).

Sec. 9.02.132. Protection of Drainage and Creek Areas

(a) Natural Preservation Required

All creeks and drainage channels shall be preserved and protected in their natural condition wherever possible, unless significant storm drainage improvements are required by the City in these areas. All development adjacent to creeks and drainage channels shall be in accordance with the City's design standards, and with any other City policies or ordinances related to aesthetics or public access or enjoyment of creeks and waterways.

(b) Definitions and methodology for determining the floodway management area (FMA).

(1) The definitions for "floodway" and "floodway fringe" shall correspond to those set forth by the Federal Emergency Management Agency (FEMA).

(2) For the purposes of these subdivision regulations, the floodway management area (FMA) will correspond to the floodway, as defined by FEMA, or as may be modified pursuant to a flood study that is approved by FEMA.

(3) For purposes of the National Flood Insurance Program, the concept of a floodway is used as a tool to assist the local community in the aspect of floodplain management. Under this concept, the area of the 100-year flood is divided into a floodway and floodway fringe. The floodway is the channel of a stream plus any adjacent floodplain areas that must be kept free of encroachment in order that the 100-year flood may be carried without substantial increases in flood heights as defined by FEMA. The area between the floodway and boundary of the 100-year flood is termed the floodway fringe. The floodway fringe is the area which can be reclaimed for development in accordance with rules and regulations established by FEMA and the City's flood damage prevention regulations set forth in article 4.12 of this code.

(c) Areas Where an FMA is Required

(1) The FMA is intended to apply to a creek or channel which is to remain open or in its natural condition unless otherwise approved by the City. East Fork Trinity River, Whites Creek, Hurricane Creek, Throckmorton Creek, Slayter Creek, Sweetwater Creek, Brinlee Creek, Sister Grove Creek, Wolf Run Creek, Elm Creek, Pilot Grove Creek and their related tributaries and streams and all other drainage areas or regulated floodways as referenced on the applicable floodway and flood boundary map (flood insurance rate map, or FIRM) shall be included in the FMA.

(2) If FEMA does not specify a floodway and a base flood elevation in a regulated zone in any of the creeks or their tributaries, it shall be the developer's responsibility to establish and identify the FMA. The

determination shall be made by a licensed professional engineer and approved by the City Engineer or the designated floodplain administrator.

(3) Where improvements to a drainage area are required by other ordinances of the City for the purpose of safety or other reasons related to drainage, those ordinances shall also be observed.

(4) The creek shall remain in its natural state unless improvements are permitted or required by the City due to the pending development of properties adjacent to or upstream of the required improvements.

(d) Ownership and maintenance of the FMA

(1) The area determined to be the FMA shall be designated on the preliminary plat. Accurate locations of the FMA, both horizontally and vertically, shall be established on the preliminary plat and prior to site construction. At the City's option, the FMA shall be protected by one of the following methods:

(A) Dedicated to the City subject to approval by the City Council.

(B) As easement(s). Creeks or drainageways on tracts which have private maintenance provisions, can be designated as the FMA by an easement to the City on the preliminary plat (with the appropriate plat language, as required by the City). Subdivisions with platted single-family or two-family lots may designate the FMA by easement provided there are adequate maintenance provisions (such as by a mandatory homeowners' association or a public improvement district), but no lots or portions of lots may be platted in the easement unless specifically allowed by the City. The area designated as FMA may be identified by a tract number.

(C) Certain recreational uses normally associated with or adjacent to flood prone areas (no structures allowed in the FMA), such as golf courses or certain types of parks. The uses allowed shall be in conformance with the zoning ordinance, if the subdivision is located within the City, and shall require approval by the City Council.

(2) Prior to acceptance of any drainage way as an FMA by the City, the area shall be cleared of all debris and brush (except for trees) and placed in a maintainable state. Floodway management areas dedicated to the City shall be left in a natural state except those areas designated for active recreational purposes and unless storm drainage requirements do not permit this to occur.

(e) Design Criteria

The following design criteria shall be required for development adjacent to the FMA:

(1) Adequate access shall be provided to and along the FMA for public and/or private maintenance. An unobstructed area a minimum of 20 feet wide with a maximum 5:1 slope (five feet horizontal to one foot vertical), the length of the floodway shall be provided adjacent to or within the FMA. On the opposite side of the drainage area, an unobstructed area a minimum of five feet in width shall be provided. If ownership is to the centerline of the drainage channel, then the subdivider shall only be required to provide adequate access to one side.

(A) Lots in a single-family, PD single-family, or duplex residential zoning district shall not be platted within the FMA.

(B) If lots back or side onto an FMA, at least two reasonable points of access to the FMA, each a minimum of 20 feet in width, shall be provided. Streets, alleys and open-ended cul-de-sacs may qualify as access points if designed such that they are navigable by maintenance vehicles (e.g., alleys must be 20-foot width).

(2) All areas of the FMA shall be accessible from the access points.

(3) Lots used for multifamily dwellings may be platted in the FMA if the FMA is identified as an easement and is maintained as open space for use by the residents, and provided that access to the FMA is possible by City maintenance vehicles, should that need arise.

(4) If the FMA is to be public park land, then adequate public access and good public visibility shall also be provided to all portions of it.

(5) Public streets may be approved in the FMA by the City if they conform to applicable engineering standards.

(6) Linear public streets may be required to be constructed adjacent to some (or all) portions of the FMA to allow access for maintenance or recreational opportunities, and/or to allow increased visibility into creek areas for public safety and security purposes.

(7) Alternate designs to facilitate equal or better access may be permitted if approved by the City.

(f) Altered Drainage Channels

Drainage channels which have been previously altered and are not in a natural condition can be exempted from an FMA and this section at the discretion of the Commission and City Council and upon recommendation by the City staff except that any such alteration shall cause the developer to prepare an application for any appropriate letter of flood map revision.

(g) Conflicts

In the event of any conflict between any regulation or requirement in this section and any regulation or requirement in the City's flood damage prevention regulations set forth in this code at article 4.12, or other applicable regulation or requirement, the most restrictive regulation or requirement shall govern.

Sec. 9.02.133. Public Improvement Districts

(a) Applicability

When a proposed subdivision includes public improvements, such as screening walls, recreation facilities, open space, flood management areas, landscaped entry features and/or medians, or other public amenities that primarily benefit the properties within the subdivision, the developer shall submit with the preliminary plat application, a petition for the creation of a public improvement district (PID) that meets the criteria outlined in chapter 372 of the Local Government Code.

(b) Petition

(1) The PID petition shall include all properties within the subdivision and may include additional properties similarly benefited by the public improvements.

(2) The City Council may approve or deny or take any other lawful action related to a petition requesting creation of a public improvement district.

(3) The City Council may deny any plat or development plan or application that proposes to designate, create, or construct public improvements such as screening walls, recreation facilities, open space, flood management areas, landscaped entry features and/or medians, or other public amenities that primarily benefit the properties within the subdivision, that are not included in a public improvement district.

(c) Assessments

Any PID or PID assessment shall:

(1) Include funding to cover any administrative and legal cost incurred by the City related to the creation and general administration of the PID.

(2) Include funding to pay for the perpetual maintenance of the public improvements.

Sec. 9.02.134. Property Owners' or Homeowners' Associations

(a) Applicability

(1) When a subdivision contains either common private property or other private improvements which are not intended to be dedicated to the City for public use, such as private streets, a private recreation facility or open space, or other private amenities, a property owners' or homeowners' association agreement, consistent with state and other appropriate laws, must be submitted with the preliminary plat application and approved by the City Attorney.

(2) The conditions, covenants and restrictions (CCRs) and the association documents, such as the articles of incorporation and association bylaws, shall be submitted to the City for review and approval along with the preliminary plat application, and shall be filed of record at the county prior to final plat approval in order to ensure that there is an entity in place for long-term maintenance of these improvements.

(3) Said documents must, at a minimum, include provisions which allow the City to take over the maintenance of common property using association funds, including private streets and private recreation facilities, if such action becomes necessary for any reason, including nonperformance or inaction by the association.

(4) Provisions shall also be included which would convey ownership of the private streets (if any) and all other common areas to the City, and which would allow the City to remove any improvements or amenities from the common areas and sell any buildable land area, as residential lots, to recoup the City's expenses for maintenance or demolition of the improvements.

(5) Any monies that remain after the City has recovered all of its expenses shall be retained for future maintenance or upgrading of the streets, common areas (if any remain), screening walls, or other improvements within the subdivision.

(6) These provisions are not intended to allow the City to profit in any way from taking over the association's responsibilities or funds; they are only intended to allow the City to recoup its actual incurred expenses such that the general public, the taxpayers of the City, does not have to bear these costs.

(b) Membership

A property owners' or homeowners' association shall be an incorporated nonprofit organization operating under recorded land agreements through which:

(1) Each lot owner within the described land area is automatically a mandatory member; and

(2) Each lot is automatically subject to a charge for a proportionate share of the expenses for the property owners' or homeowners' association's activities, such as maintenance of common open spaces or private streets, or the provision and upkeep of common recreational facilities.

(c) Legal Requirements

(1) In order to ensure the establishment of a proper property owners' or homeowners' association, including its financing, and the rights and responsibilities of the property or homeowners in relation to the use, management and ownership of common property, the plat, dedication documents, covenants, and other recorded legal agreements must:

(A) Legally create an automatic membership, nonprofit property owners' or homeowners' association;

(B) Place title to the common property in the property owners' or homeowners' association, or give definite assurance that it automatically will be so placed within a reasonable, definite time;

(C) Appropriately limit the uses of the common property;

(D) Give each lot owner the right to the use and enjoyment of the common property;

(E) Place responsibility for operation and maintenance of the common property in the property owners' or homeowners' association;

(F) Place an association charge on each lot in a manner which will both ensure sufficient association funds and which will provide adequate safeguards for the lot owners against undesirable high charges;

(G) Give each lot owner voting rights in the association; and

(H) Identify land area within the association's jurisdiction including the following:

(i) Property to be transferred to public agencies;

(ii) The individual residential lots;

(iii) The common properties to be transferred by the developer to the property owners' or homeowners' association; and

(iv) Other parcels.

(2) Any governmental authority or agency, including the City and the county, their agents, and employees, shall have the right of immediate access to the common elements at all times if necessary for the preservation of public health, safety and welfare. Should the property owners' or homeowners' association fail to maintain the common elements to City specifications for an unreasonable time, not to exceed 90 days after written request to do so, then the City shall have the same right, power and authority to enforce the association's rules and to levy assessments necessary to maintain the common elements. The City may elect to exercise the rights and powers of the property owners' or homeowners' association or its board, or to take any action required and levy any assessment that the property owners' or homeowners' association might have taken, either in the name of the property owners' or homeowners' association or otherwise, to cover the cost of maintenance (or the possible demolition, if such becomes necessary to preserve public safety or to ease maintenance burden) of any common elements.

(3) The property owners' or homeowners' association must register a contact person with the planning department and shall notify the City of any change in said contact person. Such contact person must be authorized to receive and distribute information to the board of directors of the property owners' or homeowners' association.

(d) Protective Covenants

(1) Protective covenants shall be developed which, among other things, shall make the property owners' or homeowners' association responsible for the following:

(A) The maintenance and operation of all common property;

(B) The enforcement of all other covenants;

(C) The administration of architectural controls (if included); and

(D) Certain specified maintenance of exterior improvements of individual properties (if included).

(2) The City is not responsible (i.e., has no jurisdiction) for enforcing protective covenants or deed restrictions.

(e) Dissolution

The association may not be dissolved without the prior written consent of the City Council.

(f) Amendment of Documents

No portion of the association documents pertaining to the maintenance of screening walls, private streets and alleys, and associated assessments, may be amended without the written consent of the City Council.

Sec. 9.02.135. Park Land Dedication & Development

(a) Park Access

(1) General Requirements

Parks should be easy to access and open to public view so as to benefit area development, enhance the visual character of the City, protect public safety, and minimize conflict with adjacent land uses. The following guidelines should be used in designing parks and adjacent development:

(A) Where physically feasible, parks should be bounded by streets or by other public uses (e.g., a school, library, or recreation center).

(B) Where residential lots must directly abut a park, lots should be oriented to side and not back to the park. In this instance, cul-de-sac and looped streets should be used to access the lots and park (see illustrations). Residential lots should back to a park only when the site's physical character (e.g., shape, topography, drainage) does not reasonably permit an alternative design or the layout of the subdivision complements the use of the park (e.g., lots backing to a golf course).

(C) A proposed subdivision adjacent to a park may not be designed to restrict reasonable access to the park from other area subdivisions. Street connections to existing or future adjoining subdivisions may be required to provide reasonable access to parks.

(D) Where a nonresidential use must directly abut a park, the use must be separated by a screening wall or fence and landscaping. Access points to the park may be permitted by the Commission if public benefit is established.

(E) Alleys may abut a park, but they should not be designed to encourage their use as means of vehicular, bike, or pedestrian travel to the park. If the property line of the parkland does not abut a dedicated street or sidewalk connection within 500 feet of a looped alley, a minimum 10’-wide pedestrian access easement or additional 10’ right-of-way shall be required adjacent to the alley to provide a sidewalk connection from the street to the park land. Construction of a sidewalk in this easement is eligible for development fee reimbursement if connecting to an existing trail or a trail being constructed by the developer.

(F) Streets abutting a park (Park Access Street) shall be built in accordance with the Anna Design Standards and the standards of this ordinance; however, the City may require any residential street built adjacent to a park to be constructed to collector width to ensure access, to provide parking, and to prevent traffic congestion.

(i) When park land is acquired, the City shall reserve sufficient land to provide fifty (50) percent of the right-of-way for abutting streets.

(ii) The cost of constructing residential streets (pavement width 31 feet) and alleys abutting a park shall be the responsibility of the developer.

(iii) The City may choose to reimburse the developer up to fifty (50) percent of the cost of construction of the portion of any Park Access Street greater in width than a local residential street if funds are available. Said reimbursement shall be considered as part of a Subdivision Improvement Agreement or Development Agreement, considered for approval by the City Council.

(iv) The City Council, upon recommendation from the Planning & Zoning Commission, may choose to add the Park Access Street to the City of Anna Master Thoroughfare Plan if it meets the minimum criteria for a collector or arterial road. All collector and arterial roads in the City of Anna Master Thoroughfare Plan are eligible for roadway impact fee reimbursement in accordance with State Law.

(v) In all cases, the City shall approve the proposed street alignment fronting on City parks.

(b) Park Land Dedication

(1) Purpose

The purpose of this section is to provide recreational areas and amenities in the form of neighborhood parks as a function of subdivision development in the City. This section is enacted in accordance with the home rule powers of the City, granted under the Texas Constitution and statutes of the State of Texas, including, without limitation, Texas Local Government Code, Section 51.071 et seq. and Section 212.001 et seq.

(2) Necessary Procedure

It is hereby declared by the City Council that recreational areas, in the form of neighborhood parks and related amenities and improvements, are necessary and in the public welfare, and that the only adequate procedure to provide for this is by integrating such a requirement into the procedure for planning and developing property of a residential subdivision in the City, whether such development consists of new construction on previously vacant land or rebuilding and redeveloping existing residential areas.

(3) Park Purposes

Neighborhood parks are those parks providing a variety of outdoor recreational opportunities and within convenient distances from a majority of the residences to be served thereby, the standards for which are set forth in the City's Comprehensive Plan including the Parks Master Plan. The neighborhood parks shown on the official City Parks Master Plan shall be prima facie evidence that any park located therein is within such a convenient distance from the majority of residences to be served thereby. The cost of the neighborhood parks should be borne by the ultimate residential property owners who, by reason of the proximity of their property to such parks, shall be the primary beneficiaries of such facilities. Therefore, the following requirements are adopted to effect such purposes.

(c) General Requirement

Dedication of Land and Payment of Park Development Fee.

(1) Dedication of Land Based on Dwelling Units

Prior to a plat being filed with the County Clerk of Collin County, Texas for a development of a residential area within the City or ETJ and in accordance with City ordinances, such plat shall contain a clear fee simple dedication of one acre of land for each 50 proposed dwelling units. As used in these subdivision

regulations, a “dwelling unit” means each individual residence, including individual residences in a multifamily structure, designed and/or intended for inhabitation by a single family.

(2) Plat Requirement

Any proposed plat submitted to the City for approval shall show the area proposed to be dedicated under this section. The required land dedication of this section may be met by a payment in lieu of land where permitted by the City or required by other provisions in these subdivision regulations.

(3) Impractical Size

The City Council declares that development of an area of less than five acres for neighborhood park purposes is impractical. Therefore, if fewer than 250 dwelling units are proposed by a plat filed for approval, the City Council may require the developer to pay the applicable cash in lieu of land amount, as provided in Subsection (d) below.

(4) Park Development Fee

In addition to the required dedication of land, as set forth above, there shall also be a park development fee paid to the City as a condition of plat approval. Such park development fee shall be set from time to time by ordinance of the City Council and shall be sufficient to provide for the development of amenities and improvements on the dedicated land to meet the standards for a neighborhood park to serve the area in which the Subdivision is located. Park development fees are found in Appendix A of this code. Such fee shall be paid at the time of application for a building permit.

(5) Option to Construct

In lieu of payment of the required park development fee, a developer shall have the option to construct the neighborhood park amenities and improvements. All plans and specifications for the construction of such amenities and improvements must be reviewed and approved by the City Manager, or applicable designees. The developer shall financially guarantee the construction of the amenities and improvements, and the City must approve same, prior to the filing of a plat in the case of platted subdivisions. Once the amenities and improvements are constructed, and after the City has accepted such amenities and improvements, the developer shall dedicate by plat such amenities and improvements to the City.

(6) Right to Accept, Reject or Require Payment

In instances where land is required to be dedicated, the City shall have the right to accept or reject the dedication after consideration of the recommendation of the Parks Advisory Board and to require a cash payment in lieu of land in the amount provided herein, if the City determines that sufficient park area is already in the public domain for the area of the proposed development, or if the recreation potential for that area would be better served by expanding or improving existing neighborhood parks.

(7) Siting of parks

When two or more developments are necessary to create a neighborhood park of sufficient size in the same area, the Director of Development Services, at the time of preliminary plat approval, will work with the developers to define the optimum location of the required dedication within the respective plats. Once a park site has been determined, adjacent property owners who develop around the park site shall dedicate land and cash to the existing site unless otherwise determined by the City Council.

(d) Cash in Lieu of Land

(1) Requirement

A developer responsible for land dedication under these subdivision regulations shall be required, at the City Council's option, to meet the dedication requirements in whole or in part by a cash payment in lieu of land, in the amount set forth below. Such payment in lieu of land shall be made prior to filing of the final plat for record.

(2) Fee

The cash payment in lieu of land dedication shall be met by the payment of a fee set from time to time by ordinance of the City Council sufficient to acquire neighborhood park land. Cash payment fees in lieu of land dedication are found in the fee schedule in Appendix A of this code. Such fees shall be paid by the developer prior to filing of the final plat for properties located within the ETJ.

(3) Park Development Fee

A cash payment in lieu of land dedication, as set forth in this section, does not relieve the developer of its obligation to pay the park development fee set forth in Subsection (c)(4) above. The cash payment in lieu of land dedication is in addition to the required park development fee.

(4) City Purchase of Land

The City may from time to time decide to purchase land for parks in or near the area of actual or potential development. If the City does purchase park land in a park service area, subsequent park land dedications for that zone shall be in cash only, the calculation of which is set forth above. (Such cash payment is in addition to the payment of the required park development fee.)

(e) Park Development Fund

(1) All funds collected by this dedication process or collected under Subsection (d)(4) above will be deposited into the City's Park Development Fund and used for parks and recreation purposes related to the following:

(A) Land acquisition;

(B) Capital improvements;

(C) Planning, engineering, and design of parks and recreation facilities;

(D) Construction of new parks and recreation facilities;

(E) Rehabilitation and modernization of existing park and recreation facilities;

(F) Maintenance and equipment for new parks and recreation facilities;

(G) Maintenance and equipment for existing, and recently rehabilitated and modernized parks and recreation facilities;

(H) Long-range planning for land, facilities, recreation, and related programs;

(I) Feasibility studies, market studies, and economic impact analysis relating to parks and recreation projects and programs; or

(J) Creation, planning, management, administration, operation, marketing, and promotion of events and recreational activities.

(2) Except as may relate to the staffing of the Parks and Recreation Department or the creation, planning, management, administration, operation, marketing, and promotion of parks, park facilities, park

amenities, park funding and development, events, and recreational activities, amounts deposited into the Parks Development Fund shall not be used for staffing and daily operation. All expenditures from said fund will adhere to the City's procurement policies and practices.

(f) Additional Requirements and Definitions

(1) Any land dedicated to the City under these subdivision regulations must be suitable for park and recreation uses. The following characteristics of a proposed area, which may be grounds for refusal of any plat, are generally unsuitable:

(A) Any area primarily located in the 100-year floodplain unless the area is part of the trail system shown on the City's most current Trail Master Plan.

(B) Any areas of unusual topography or slope which renders the area unusable for organized recreational activities.

(2) Drainage areas may be accepted as part of a park if the channel is to remain, more or less in its natural state or constructed in accordance with City Engineering standards, if:

(A) No significant area of the park is cut off from access by such channel;

(B) Not less than five acres of the site is above the 100-year floodplain; or

(C) The dedication is in excess of 10 acres, not more than 50% of the site should be included in the 100-year floodplain.

(3) Each park must have ready access to a public street.

(4) Unless provided otherwise herein, an action by the City shall be by the City Council, after consideration of the recommendations of the Parks Advisory Board.

(5) Parks are defined in Section 9.04.081(e)(11) of the Zoning Ordinance.

PARK ACCESS

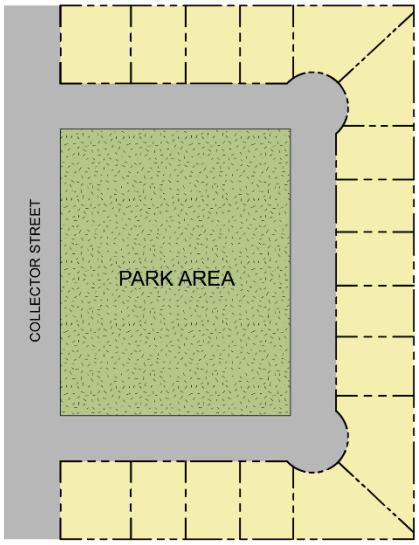

COLLECTOR STREET

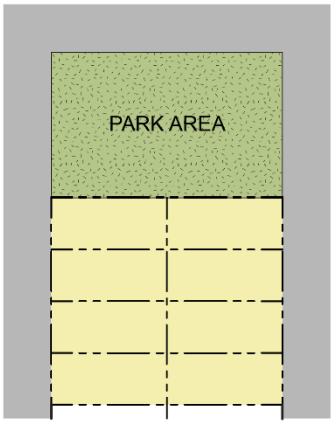

LOOP STREET

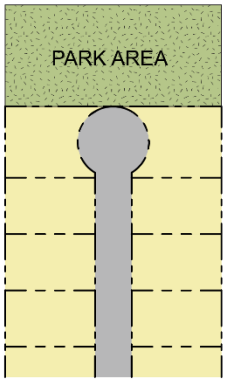

CUL-DE-SAC

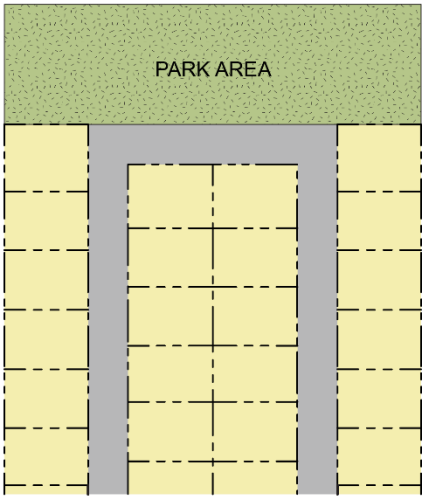

LOOP STREET

§ 9.02.136 through § 9.02.160. (Reserved)

Division 5. IMPROVEMENTS REQUIRED PRIOR TO ACCEPTANCE OF SUBDIVISION

Sec. 9.02.161. Improvements, In General

(a) Purpose

The requirements as set forth below are designed and intended to ensure that, for all subdivisions of land within the scope of these subdivision regulations, all improvements as required herein are installed properly and:

(1) The city can provide for the orderly and economical extension of public facilities and services;

(2) All purchasers of property within the subdivision shall have a usable, buildable parcel of land; and

(3) All required public improvements are constructed in accordance with city's design standards.

(b) Adequate Public Facilities Policy

The land to be divided or developed must be served adequately by essential public facilities and services. No plat shall be recorded unless and until adequate public facilities exist or provision has been made for water facilities, wastewater facilities, drainage facilities, electricity and street facilities which are necessary to serve the development proposed, whether or not such facilities are to be located within the property being platted or off-site. Wherever the subject property adjoins undeveloped land, or wherever required by the city to serve the public good, utilities shall be extended to adjacent property lines to allow connection of these utilities by adjacent property owners when such adjacent property is platted and/or developed.

(c) Public Improvements Required

Public improvements that are required by the city for the acceptance of the subdivision by the city shall include the following:

(1) Water and wastewater facilities;

(2) Storm water drainage, collection and conveyance facilities;

(3) Water quality, erosion and sedimentation controls;

(4) Streets;

(5) Streetlights;

(6) Street signs;

(7) Alleys (if provided);

(8) Sidewalks, including ADA approved ramps at street intersections and other appropriate locations;

(9) Screening and/or retaining walls (where required);

(10) Traffic-control devices required as part of the project; and

(11) Appurtenances to the above, all designed and constructed in accordance with ADA standards, if applicable, and any other public facilities required as part of the proposed subdivision.

(d) Compliance Required

All aspects of the design and implementation of public improvements shall comply with the city's current design standards and any other applicable city codes and ordinances, including preparation and submittal of

engineering plans and construction inspection. The construction of all of the improvements required in these subdivision regulations shall conform to the city's design standards, and to any other applicable city ordinance, rule, policy, or regulation.

(e) Utility Lines

All utility lines that pass under a street or alley shall be installed before the street or alley is paved. When it is necessary that utility lines pass under the street or alley pavement, they shall be installed to a point at least three feet beyond the edge of the pavement.

Sec. 9.02.162. Monuments

(a) Block Corner Monuments

Monuments consisting of 5/8" diameter steel rods 24" long and set flush with the top of the ground shall be placed at all corners of block lines, the point of intersection of alley and block lines, and at points of intersections of curves and tangents of the subdivision. Each block corner monument shall be marked in a way that is traceable to the responsible RPLS or associated employer.

(b) Lot Corner Monuments

Lot corner monuments shall be placed at all lot corners (except corners which are also block corners), consisting of iron rods or pipes of a diameter of not less than 5/8 inch and 24 inches in length, and set flush with the top of the ground.

(c) Curve Point Markers

In addition, curve point markers shall be established of the same specifications as lot corners.

(d) View Between Monuments Obstructed

Where, due to topographic condition, permanent structures, or other conditions, the view is obstructed between any two adjacent monuments, intermediate monuments shall be so set as to assure a clear view between adjacent monuments.

(e) Installed Prior to Acceptance and Filing

All required block, lot, and curve monuments shall be installed prior to the final acceptance of the subdivision by the city and prior to filing the plat at the county.

(f) Precision and Error of Closure

All survey work around the boundary area, as well as within the subdivision, [shall] satisfy the following precision requirements and otherwise comply with Texas Admin. Code, Title 22, Chapter 138, Subchapter E, as applicable:

(1) The actual relative location of corner monuments found or set within the corporate limits of the city shall be reported within a positional tolerance of 1:10,000 + 0.10 feet.

(2) The actual relative location of corner monuments found or set within the extraterritorial jurisdiction of the city shall be reported within a positional tolerance of 1:7,500 + 0.10 feet.

(3) The actual relative location of corner monuments found or set in all rural areas outside the corporate limits and extraterritorial jurisdiction of the city shall be reported within a positional tolerance of 1:5,000 + 0.10 feet.

(4) Areas, if reported, shall be produced, recited, and/or shown only to the least significant number compatible with the precision of closure.

(5) Survey measurement shall be made with equipment and methods of practice capable of attaining the tolerances specified by these standards.

(6) Positional tolerance of any monument is the distance that any monument may be mislocated in relation to any other monument cited in the survey.

(g) Subdivisions Containing 5 Acres or More

A subdivision containing five acres or more shall have at least two monuments set by the RPLS, if not already existing, for two corners of the subdivision, and such monuments shall be located at opposite ends (or at widely separated corners) of the subdivision and clearly shown on the final plat prior to filing at the county. The final plat shall also show clear ties to existing monuments in the vicinity of the subdivision.

Sec. 9.02.163. Streetlights

(a) Streetlights

Streetlight locations and installations shall be coordinated by the subdivider with the power company and the city. Street lighting shall conform to the latest edition of the Illuminating Engineering Society Handbook. Streetlights shall be as manufactured by Kim Standards or a comparable streetlight approved by the Public Works Director. Streetlights shall be installed a maximum distance of 600 feet apart, at intersections, and at the ends of cul-de-sacs. The subdivider shall pay for the electricity used by the streetlights until building permits are issued for 80% of the lots, after which time the city shall pay for the cost of electricity used.

Sec. 9.02.164. Street Names and Signs

(a) Review and Approval Required

Street names must be submitted to the city for review and approval in accordance with the city's guidelines for the naming of streets.

(1) Preliminary Plat

Proposed street names shall be submitted for review as a part of the preliminary plat application, and shall become fixed at the time of approval of the preliminary plat.

(2) Final Plat

On the final plat, street names shall not be changed from those that were approved on the preliminary plat unless special circumstances have caused the major realignment of streets or a proposed street name(s) is discovered to have already been used elsewhere in the city (or some other similar eventuality). If additional street names are needed for the final plat, then they must be submitted for review and approval by the city, along with the final plat application. A fee may be established by the city for the changing of street names after approval of the preliminary plat.

(b) Streets Named for Corporations/Businesses Prohibited

The names of corporations or businesses shall not be used as street names, unless approved by the city council.

(c) List of Street Names Maintained

The city will maintain a list of existing street names that are essentially "reserved" names that have been previously been approved on a preliminary plat, and will update the list as new streets are platted.

(d) Duplication and Similarities Prohibited

New street names shall not duplicate existing street names either literally or in a subtle manner (for example, Smith Street vs. Smythe Street; Oak Drive vs. Oak Place vs. Oak Court vs. Oak Circle; Lantern Way vs. Land Tern Way; Cascade Drive vs. Cascading Drive); shall not be so similar as to cause confusion between names (for example, Lakeside Drive vs. Lake Side Drive vs. Lake Siding Drive).

(e) New Streets Extending Existing Street

Any new street that extends an existing street shall bear the name of the existing street.

(f) Street Names Related to Intersections

Streets crossing other streets shall bear the same name on both sides of the intersection, wherever practical, unless otherwise approved by Commission and City Council.

(g) Street Sign Installation

Street signs shall be installed by the subdivider at all intersections within or abutting the subdivision. Such signs shall be of a type approved by the city and shall be installed in accordance with standards of the city. Traffic signs shall be furnished in accordance with the latest Texas Manual on Uniform Traffic Control Devices.

(h) Timing of Installation

Street name signs shall be installed in accordance with the city's guidelines before final acceptance of the subdivision by the city.

Sec. 9.02.165. Street and Alley Improvements

(a) Facilities Constructed by Developer

All facilities, such as internal streets and alleys, existing or proposed streets located immediately adjacent to the property, perimeter streets, and approach streets that are required to be constructed or improved in order to adequately serve the development, shall be constructed by the developer at the developer's expense, unless otherwise allowed by these subdivision regulations.

(b) Construction and Design

All streets and alleys shall be constructed using reinforced concrete paving with integral curb and gutter, unless otherwise approved by the city, and shall conform in width and section to the thoroughfare plan of the city. All street design and construction shall conform to the city's design standards.

(c) Paving Standards

The developer shall construct all streets and alleys according to the minimum street and alley paving standards contained within the design standards.

(d) Accessibility for Physically Challenged Persons

In addition to the above-mentioned minimum standards, barrier-free ramps for physically challenged persons shall be constructed at all street corners, driveway approaches, appropriate mid-block crosswalks, and in locations where accessible parking spaces are provided. All barrier-free ramps and other accessibility considerations shall comply with the Highway Safety Act, as currently amended, and with the Americans With Disabilities Act (ADA), as amended.

(e) Signs and Barricades

All signs and barricades shall be in conformity with the design standards, with ADA standards, and with specifications for uniform traffic-control devices, as adopted by the city, by Collin County, by the Texas Department of Transportation, and by the Texas Department of Public Safety, as applicable.

Sec. 9.02.166. Retaining Wall Requirements, Construction Regulations, and Design Criteria

(a) Retaining Wall Requirements

In general, the use of retaining walls shall be minimized, wherever possible, through minimal and balanced cut and fill on property. When property within or directly adjacent to a subdivision contains changes in elevation exceeding 2.5 feet and the slope exceeds one unit vertical in two units horizontal, a retaining wall shall be required at the following locations prior to the acceptance of the subdivision:

(1) Follows a Side or Rear Property Line

The grade change roughly follows a side or rear lot line.

(2) Adjacent to a Building Site Boundary

The grade change is adjacent to a proposed building site boundary.

(3) Adjacent to a Watercourse or Drainage Easement.

The grade change is adjacent to a watercourse or drainage easement.

(b) Retaining Wall Design and Construction

All retaining wall design and construction shall be in compliance with the provisions of the design standards of the City, and shall be approved by the Director of Development Services and/or City Engineer.

(c) Retaining Wall Maintenance

Retaining walls shall be maintained by the owner of the property where such retaining wall is located or HOA as designated by the recorded final plat and/or applicable declarations, covenants and/or deed restrictions. If an HOA is designated and is later dissolved ownership reverts back to the owner of the property.

(d) Not in a Utility or Drainage Easement

Retaining walls shall not be constructed within any portion of a utility or drainage easement, unless approved by the City Engineer or the Director of Development Services.

Sec. 9.02.167. Screening and Landscaping Construction Regulations, Requirements, and Design Criteria

(a) Screening

(1) Required

Screening shall be required where subdivisions are platted so that the rear yards of single-family or two-family residential lots meet the following:

(A) Lots are adjacent to a street with a right-of-way width greater than a residential neighborhood collector street (60 feet or greater in right-of-way width on the comprehensive plan);

(B) Lots are adjacent to a four-lane collector street;

(C) Lots are separated from a street by an alley; or

(D) Lots back up to a collector or residential street.

(2) Developer Provided Screening

The developer shall provide (at his/her expense) a minimum six-foot tall masonry screening wall, or some other alternative form of screening, if approved by Commission and Council, according to this section.

(3) All screening shall be adjacent to the right-of-way or property.

(4) All forms of screening shall conform to the requirements of city ordinances and policies that govern visibility easements.

(5) Any required screening device that is wholly or partially destroyed or damaged shall be replaced or repaired with the same materials and shall be finished such that its appearance is restored to how it was before being destroyed or damaged.

(6) Screening Alternatives

Screening shall be provided in accordance with, and shall be constructed to, standards and criteria as set forth in the city's design standards and other related city code(s) and policy(s).

(A) An alternative form of screening, in lieu of the six-foot tall masonry wall, may be approved by the Commission and Council along with the preliminary plat. The developer shall submit drawings/renderings with the preliminary plat sufficient for the Commission and Council to make a decision to approve or deny the proposed alternative.

(B) Such possible alternatives include the following:

(i) Living/landscaped screen with decorative metal (e.g., wrought iron) fence sections with masonry columns;

(ii) A combination of embankments and living/landscaped screening, either with or without a decorative metal or "WoodCrete" type of fence with masonry columns;

(iii) A combination of embankments, decorative masonry retaining walls (no taller than six feet in height where facing or visible to a public street) and living/landscaped screening, either with or without a decorative metal or "WoodCrete" type of fence with masonry columns; or

(iv) Some other creative screening alternative may be approved if it meets the spirit and intent of this section, if it is demonstrated to be long-lasting and generally maintenance-free, and if the Commision and Council finds it to be in the public interest to approve the alternative screening device.

(C) Any required screening device shall be, or shall achieve, at least six feet in height and at least 90% opacity within three years of initial installation/planting.

(D) Any landscaping used to achieve the purpose of required screening shall be equipped with an underground irrigation system with appropriate double-check valve(s), automatic controller(s), and automatic moisture and freeze sensors. Trees used for overstory screening shall be on a separate bubbler irrigation system that can be programmed to provide deep-watering of trees at intervals that may differ from the rest of the irrigation system.

(E) The use of wood or other privacy fences immediately behind or abutting an alternative screening device that utilizes living screening elements (i.e., landscaping), embankments, retaining walls and/or

open (i.e., non-opaque) fence sections shall not be permitted due to the creation of a "no man's land" and subsequent maintenance nuisance in the area between the two devices/fences, and due to the detrimental visual appearance of this type of arrangement.

(F) Any alternative form of screening in lieu of the masonry wall shall be located in a maintenance easement and shall be included in a public improvement district in accordance with section 9.02.133 of this article.

(7) Maintenance Easement Required

A wall/screening maintenance easement at least five feet in width shall be dedicated on the private lot side and adjacent to the entire length of the screening wall or device.

(8) Timing of Installation

The screening wall/device shall be installed prior to final acceptance of the subdivision (or appropriate surety shall be provided, per division 6 of this article).

(9) Landscape Screening

All plants (e.g., trees, shrubs and ground cover) shall be living and in sound, healthy, vigorous and growing condition, and shall be of a size, fullness and height that is customary for their container or ball size, as per the latest edition of the "American Standard for Nursery Stock," by the American Association of Nurserymen, as may be amended.

(10) Properly Engineered

All masonry, wrought iron, steel or aluminum screening wall or fence plans and details must be designed and sealed by a licensed professional engineer, and must be approved by the city engineer.

(A) Masonry walls shall be in accordance with the city's design standards within the design standards [sic].

(B) Decorative metal fencing shall be solid stock, not tubular, and shall have masonry columns at a minimum spacing of 40 feet on center unless otherwise approved.

(11) Height

The height of required screening devices, including spans between columns, shall be a minimum of six feet and shall be no more than eight feet tall. Decorative columns, pilasters, stone caps, sculptural elements, and other similar features may exceed the maximum eight-foot height by up to two feet for a total maximum height of 10 feet for these features, provided that such taller elements comprise no more than 10% of the total wall length in elevation view. Features that are taller than 10 feet in height shall require Commission and Council approval on the landscaping/screening plans submitted with the preliminary plat.

(12) Maintenance

All screening walls shall be maintained by a homeowners' association as described in section 9.02.134 or included in a public improvement district in accordance with section 9.02.133 of this article.

(b) Subdivision Identification Signs

(1) Subdivision identification signs are permitted at the entrance of single-family residential subdivisions which are bisected by one or more streets. Such subdivisions must have 10 or more platted lots.

(2) Subdivision identification signs may be free-standing or may be incorporated on a screening wall located in an appropriate easement. Any screening wall on which a subdivision identification sign has been

incorporated shall also meet the requirements of this section, as well as general screening wall requirements located in other sections of these subdivision regulations.

(3) The maximum size of a subdivision identification sign shall be 32 square feet per sign with a maximum height of six feet unless an alternative design is otherwise approved by the city council.

(4) A subdivision identification sign shall be included in a public improvement district in accordance with section 9.02.133 of this article.

(5) Signs may be located at each corner of an intersection of an entrance street or within the median of a divided street, but shall not be located in within visibility easements.

(6) The design of the subdivision identification sign shall be in accordance with the city's design standards, as applicable.

(7) The design of the subdivision identification sign (including any related screening wall) shall be reflected on materials/plans submitted along with the preliminary plat and the engineering plans, and shall be approved by the city.

(c) Landscaping

All landscaping shall be in conformance with the city's landscape regulations, as amended.

(d) Signage

All signage shall be in conformance with the city's sign regulations as amended.

(2008 Code, pt. III-A, art. 5, sec. 7)

Sec. 9.02.168. Water and Wastewater Requirements

(a) Installation

The installation of all water and wastewater lines shall be in conformance with section 9.02.090 of this article. The design and construction of the water system and sanitary sewer system shall be in conformance with the city's master plans for water and wastewater facilities, the design standards, and construction plans, and shall be approved by the city engineer.

(b) Provision for Water and Wastewater Required

No final plat shall be approved for any subdivision within the city or its extraterritorial jurisdiction until the applicant has made adequate provision for a water system and a sanitary sewer system of sufficient capacity to adequately provide service to all tracts and lots within the area to be subdivided.

(c) Safe Water Supply and Fire Protection

Water system mains of sufficient size and having a sufficient number of outlets to furnish adequate and safe domestic water supply and to furnish fire protection to all lots shall be provided.

(d) Water And Wastewater Mains to Property Line

Water and wastewater mains shall extend to the property line in order to allow future connections into adjacent undeveloped property unless otherwise authorized by these subdivision regulations.

(e) Utilities to Property Line of Each Lot

Services for utilities shall be made available to the property line of each lot in such a manner as will minimize the necessity for disturbing the street pavement and drainage structures when connections are made.

(f) Fire Protection

Fire protection shall be provided in accordance with sections 9.02.089 and 9.02.090 of this article, with the city's design standards, and with any other city policy or ordinance pertaining to fire protection or suppression.

(1) The fire chief or his/her designee shall have the authority to approve the locations and placement of all fire hydrants, fire lanes, and easements in accordance with the adopted fire code. He or she may, at his or her discretion, modify fire hydrant spacing or fire lane placement based upon special design or distance circumstances.

(2) Vertical construction (i.e., any building construction above foundation/slab level) shall not commence until all required fire lanes are properly installed and accepted by the city, nor until all fire hydrants have been installed, inspected, tested and accepted by the city.

Sec. 9.02.169. Storm Drainage and Water Quality Controls

(a) Adequate Storm Sewer System Required

An adequate storm sewer system consisting of inlets, pipes and other underground structures with approved outlets shall be constructed where runoff of storm water and the prevention of erosion cannot be accomplished satisfactorily by surface drainage facilities.

(b) Areas Subject to Flood Conditions or Storm Water Retention

Areas subject to flood conditions or inadvertent storm water retention, such as standing or pooling water, as determined by the city engineer, will not be considered for development until adequate drainage has been provided.

(c) Design

The criteria for use in designing storm sewers, culverts, bridges, drainage channels, and other drainage facilities shall conform to sections 9.02.090 and 9.02.091, as applicable, of this article and the design standards.

(d) Proper Functioning Required Prior to Expiration of Maintenance Bond

The developer shall ensure that all drainage improvements within public easements or rights-of-way are functioning properly prior to the expiration of the maintenance bond.

(1) Responsibility

The developer shall be responsible for removing any significant build-up of sediment or debris from drainage improvements, with the exception of back-lot and side-lot drainage swales, through the 24th month of the required two-year maintenance bond for the applicable facilities.

(2) City Inspection

The city shall inspect the improvements to determine any maintenance or correction of deficiencies at the conclusion of this period.

(e) Storm water pollution prevention plan (SWPPP).An SWPPP shall be provided for storm water discharge in accordance with Texas Pollutant Discharge Elimination System (TPDES) general permit, TXR150000, and/or Environmental Protection Agency (EPA) regulations. This shall include the assumption of responsibility of said pollution prevention system, including the design and implementation of said system, complete in place. Moreover, when it comes to SWPPP, the contractor has the sole authority, responsibility and control over

plans and specifications of the said SWPPP only and can make changes to those specifications for the entire project as he deems necessary or needed to remain in compliance with the Texas Commission on Environmental Quality (TCEQ) and/or EPA regulations. When site stability is achieved in accordance with the SWPPP, the developer shall remove the control apparatuses, devices, and systems and remove accumulated silt and debris.

§ 9.02.170 through § 9.02.200. (Reserved)

Division 6. REQUIREMENTS FOR ACCEPTANCE OF SUBDIVISIONS BY CITY

Sec. 9.02.201. Withholding City Services and Improvements Until Acceptance

(a) General Policy

The City hereby defines its policy to be that the City will withhold all City services and improvements of any type until all required improvements are properly constructed according to the approved engineering plans and to City standards, and until such public improvements are dedicated to and accepted by the City. This policy of withholding includes subdivision improvements as well as lot improvements.

(1) Subdivision Improvements

Subdivision improvements include street maintenance, extension of City services from any subdivision or property, and all street, utility, storm drainage and other public improvements.

(2) Lot Improvements

Lot improvements include retaining walls, grading, and improvements required for proper lot drainage and prevention of soil erosion.

Sec. 9.02.202. Guarantee of Public Improvements

(a) Developer's Guarantee

Before final acceptance of a subdivision located all or partially within the City or its extraterritorial jurisdiction, the City must be satisfied that all required public improvements have been constructed in accordance with the approved engineering plans and with the requirements of these subdivision regulations.

(b) Subdivision Improvement Agreement and Guarantee

The City Manager may waive the requirement that the applicant complete and dedicate all public improvements prior to final acceptance of the subdivision, and may permit the developer to enter into a subdivision improvement agreement by which the developer covenants to complete all required public improvements no later than two years following the date upon which the remainder of the subdivision is accepted. The City Manager may also require the developer to complete or dedicate some of the required public improvements prior to final acceptance of the subdivision, and to enter into a subdivision improvement agreement for completion of the remainder of the required improvements during such two-year period. The subdivision improvement agreement shall contain such other terms and conditions as are agreed to by the developer and the City.

(c) Subdivision Improvement Agreement Required for Oversize Reimbursement

The City may participate in the oversizing of water and sewer facilities required to serve the land areas and improvements beyond the subdivision. The City shall require a subdivision improvement agreement pertaining to any public improvement for which the developer shall request reimbursement from the City for oversize costs. The City Manager, subject to available funds in the budget approved by the City Council, has the authority to approve such an agreement. The City Manager is authorized to sign a subdivision improvement agreement on behalf of the City under this subsection (c).

(d) Security

Whenever the City permits an applicant to enter into a subdivision improvement agreement, it shall require the applicant to provide sufficient security, covering the completion of the public improvements. The security shall be in the form of cash escrow or, where authorized by the City, a performance bond or letter of credit or other security acceptable to the City Manager and the City Attorney, as security for the promises contained in the subdivision improvement agreement. Security shall be in an amount equal to 110% of the estimated cost of completion of the required public improvements and lot improvements. The City Engineer shall review and approve the cost estimates provided by the developer. Any security instrument, including a bond, letter of credit, or escrow agreement shall be subject to the review and approval of the City Engineer and the City Attorney.

(e) Performance Bond

(1) Requirements

If the City Council authorizes the applicant to post a performance bond as security for its promises contained in the subdivision improvement agreement, the performance bond shall comply with the following requirements:

(A) All performance bonds must be in the forms acceptable to the City Engineer and the City Attorney;

(B) All performance bonds must be executed by such sureties as are named in the current list of "Companies Holding Certificates of Authority as Acceptable Sureties on Federal Bonds and as Acceptable Reinsuring Companies," as published in Circular 570, as may be amended, by the Financial Management Service, Surety Bond Branch, U.S. Department of the Treasury;

(C) All performance bonds must be signed by an agent, and must be accompanied by a certified copy of the authority for him or her to act;

(D) All performance bonds shall be obtained from surety or insurance companies that are duly licensed or authorized in the State of Texas to issue performance bonds for the limits and coverage required.

(2) Additional Surety

If the surety on any performance bond furnished by the applicant is declared bankrupt, or becomes insolvent, or its right to do business is terminated in the State of Texas, or the surety ceases to meet the requirements listed in Circular 570, the developer shall, within 20 calendar days thereafter, substitute another performance bond and surety, both of which must be acceptable to the City.

(3) Withholding Until Improvements or Other Surety

The City may withhold building permits, certificate of occupancy permits or utility connections until such improvements are completed or other surety is provided to the City.

(f) Letter of Credit

If the City Manager authorizes the applicant to post a letter of credit as security for its promises contained in the improvement agreement, the letter of credit shall:

(1) Be irrevocable;

(2) Be for a term sufficient to cover the completion, maintenance and warranty periods, but in no event less than two years; and

(3) Require only that the City present the issuer with a signed draft and a certificate signed by an authorized representative of the City certifying to the City's right to draw funds under the letter of credit.

(g) Reducing Amount of Surety

As portions of the public improvements are completed in accordance with the design standards and the approved engineering plans, the applicant may make written application to the City to reduce the amount of the original security. If the City is satisfied that such portion of the improvements has been completed in accordance with City standards, the City Manager (or designee) may cause the amount of the security to be reduced by such amount that he or she deems appropriate, so that the remaining amount of the security adequately insures the completion of the remaining public improvements.

(h) Escrow Policies and Procedures for Streets

(1) Request for Escrow

Whenever these subdivision regulations require a property owner to construct a street or thoroughfare, the property owner may petition the City to construct the street or thoroughfare, usually at a later date, in exchange for deposit of escrow as established in this section.

(A) The basis of such petition shall be the existence of unusual circumstance(s), such as a timing issue due to pending street improvements by another agency such as TxDOT or Collin County that would present undue hardships or that would impede public infrastructure coordination or timing.

(B) If more than one street or thoroughfare must be constructed in order to meet adequacy requirements for streets, the City Manager (or designee) may prioritize streets for which escrow is to be accepted and require the deposit of all funds attributable to the development in escrow accounts for one or more of such affected streets.

(C) The City Council shall review the particular circumstances involved, and shall determine, at its sole discretion, whether or not provision of escrow deposits will be acceptable in lieu of the property owner's obligation to construct the street or thoroughfare with his or her development.

(2) Escrow deposit with the City

Whenever the City Council agrees, under these subdivision regulations, to accept escrow deposits in lieu of construction by the property owner or developer of the street or thoroughfare, the property owner or developer shall deposit in escrow with the City an amount equal to costs of the following:

(A) Administration;

(B) Advertisements;

(C) Bidding;

(D) Contingency;

(E) Testing;

(F) Design;

(G) Construction;

(H) Permits;

(I) Reviews and approvals;

(J) Inspections;

(K) Any additional land acquisition; and

(L) An appropriate (and realistic) inflation factor to ensure that the actual "future dollar" costs will be covered when actual construction occurs in the future.

(3) Determination of Escrow Amount

The amount of the escrow shall be determined by using the maximum comparable "turn-key" bid price of construction of the street or thoroughfare improvements (including the items listed in subsection (2) above). Such determination of the escrow amount shall be made as of the time the escrow is due hereunder, and shall be subject to the review and approval of the City Manager (or designee) and the City Engineer. The escrow amount shall be paid prior to release (approval) of engineering plans by the City Engineer. The obligations, responsibilities, and related liability of the property owner shall become those of the property owner's transferees, successors and assigns.

(4) Use of Escrow

Escrowed amounts, along with any interest accrued on such amount, may be used for the purposes outlined in subsection (2) above in order to undertake construction of the facilities that are required as part of the development for which the escrow was submitted.

(5) Termination of Escrow

Escrows, or portions of escrowed amounts, which have been placed with the City under this section and which have been held for a period of 10 years from the date of such payment or agreement, in the event that the City has not authorized the preparation of plans and specifications for construction of such street facilities for which the escrow was made, shall, upon written request, be returned to the property owner, along with its accrued interest. Such return does not remove any obligations of the property owner for construction of the required facilities if a building permit has not been issued on the subject lot or if a new building permit is applied for.

(6) Refund

If any street or highway for which escrow is deposited is constructed by a party other than the City, or is reconstructed by another governmental authority at no cost to the City, the escrowed funds and accrued interest shall be refunded to the property owner or applicant who originally paid the escrow amount after completion and acceptance of the public improvements. In the event that a portion of the cost is borne by the City and the other portion of the cost by another party or governmental authority, the difference between the property owner's actual proportionate cost and the escrowed funds, including accrued interest, if any, shall be refunded after completion and acceptance of the improvements.

(7) Interest Limitation

If money is refunded within six months of deposit, only the principal shall be refunded. Monies returned after this date will be refunded with 1/2 of its accrued interest.

(i) Subdivision improvement agreements for perimeter and approach streets.

(1) Perimeter and Approach Streets

If a perimeter or approach street is required to be constructed under section 9.02.082 of this article, the developer and the City may enter into a subdivision improvement agreement that provides for the future reimbursement to the developer as new development occurs along the section of the perimeter or approach street constructed by the developer. Such reimbursement shall not exceed one-half the cost per linear foot of constructing the perimeter or approach street and related improvements multiplied by the number of linear feet of the perimeter or approach street adjacent to the new development. The developer who constructed the street shall submit copies of contracts to the City to establish the cost of the project that is subject to reimbursement.

(2) Time Period for Reimbursement

If the City collects a perimeter street fee as provided for in section 9.02.082 of this article, within 10 years of the acceptance of the street by the City, it shall pay the collected amount to the developer who originally constructed the street as soon as practicable after receipt of the funds as required under the terms of a subdivision improvement agreement authorized by this subsection (i). At the expiration of the 10th year, a developer is no longer entitled to receive reimbursement.

(3) Impact Fee Credit

Unless otherwise agreed to in a written agreement concerning impact fees or other development fees, a developer who installs an approach street under the provisions of a subdivision improvement agreement may pursuant to the provisions of the agreement, receive credit for costs associated with the installation of the approach street against any street impact fees that may be lawfully assessed against the developer for that portion of the approach street constructed.

(4) Oversizing

When required for the proper and orderly growth of the City, the City Council may require a developer to install an approach street larger than necessary to support the specific development subject to the terms of a subdivision improvement agreement. If the developer is required to install an approach street larger than necessary to serve the specific development, the developer may, subject to the provisions of a subdivision improvement agreement, be reimbursed by the City for the difference in cost between the cost of installing the oversized street and the cost of installing a street meeting minimum City standards required for the type of street required to serve the development.

(A) Credit for Development Fees.

The City may, pursuant to the terms of a subdivision improvement agreement, compensate the developer for the difference in cost mandated by oversizing by crediting up to 50% of development fees charged against any portion or phase of the development.

(j) Transfer of credit.

Upon written request from the developer, credit for development fees may be transferred from the current development project to subsequent development projects, subdivisions or phases undertaken by the developer. Such transfers must be approved by the City Council.

Sec. 9.02.203. Temporary Improvements.

(a) Responsibility

The applicant shall build and pay for all costs of temporary improvements required by the City, and shall maintain those temporary improvements for the period specified by the City. Prior to construction of any temporary facility or improvement, the applicant shall file with the City a separate improvement agreement and escrow or, where authorized, a letter of credit, in an appropriate amount for temporary facilities, which agreement and escrow or letter of credit shall ensure that the temporary facilities will be properly constructed, maintained and removed.

(b) Temporary Easement

Any temporary public improvement (e.g., a temporary cul-de-sac, alley turnout, drainage swale, erosion control device, etc.) shall be placed within an easement established specifically for that purpose. The recording information of the instrument establishing the temporary easement shall not be shown on the final plat unless the easement is a permanent easement for the subdivision prior to approval of the final plat. A

temporary easement for a required public improvement shall not be abandoned without the City Manager's written consent.

Sec. 9.02.204. Failure to Complete Improvements

(a) Improvement Agreement Executed and Security Posted

In those cases where an subdivision improvement agreement has been executed and security has been posted, and the required public improvements have not been installed within the terms of the agreement, the City may:

(1) Declare the agreement to be in default and require that all the public improvements be installed regardless of the extent of completion of the development at the time the agreement is declared to be in default;

(2) Suspend any previously authorized building construction activity within the subdivision until the public improvements are completed, and record a document to that effect for the purpose of public notice;

(3) Obtain funds under the security and complete the public improvements itself or through a third party;

(4) Assign its right to receive funds under the security to any third party, including a subsequent owner of the subdivision for which public improvements were not constructed, in whole or in part, in exchange for that subsequent owner's promise to complete the public improvements on the property; or

(5) Exercise any other rights or remedies available under the law.

Sec. 9.02.205. Acceptance of Dedication Offers

(a) Acceptance

Acceptance of formal offers for the dedication of streets, public areas, easements or parks shall be by written authorization of the City Manager. The approval by the Commission and City Council of a preliminary or final plat shall not, in and of itself, be deemed to constitute or imply the acceptance by the City of any public improvements required by the plat. The City may require the plat to be endorsed with appropriate notes to this effect.

Sec. 9.02.206. Maintenance Guarantee

(a) Maintenance Bond

(1) A subdivider shall furnish a good and sufficient maintenance bond issued by a reputable and solvent corporate surety, in favor of the City, to indemnify the City against and guarantee the costs of any repairs which may become necessary to any part of the construction work performed in connection with the subdivision, arising from defective workmanship or materials used therein, for a full period of two years from the date of final acceptance of the entire project or a phase of the project if the City elects to accept a particular phase before the entire project is completed. A separate maintenance bond must be furnished for work done under each contract for each part of such construction work unless otherwise authorized by the City. Final acceptance will be withheld until said maintenance bond is furnished to and approved by the City Attorney. The maintenance bond shall have attached thereto a copy of the construction contract for such improvements and such other information and data necessary to determine the validity and enforceability of such bond. When the bond has been examined and approved, the City Attorney shall so specify in writing to the City's development department. No permits shall be issued by the building inspector of the City on any piece of property other than an original or a re-

subdivided lot in a duly approved and recorded subdivision or on a lot of separate ownership of record prior to the approval of any required maintenance bond.

(2) The City Manager may waive the requirement for a maintenance bond for projects with a construction cost of $5,000.00 or less.

Sec. 9.02.207. Construction Procedures

(a) Site Development Permit

A site development permit is required from the City prior to beginning any site development-related work in the City or its extraterritorial jurisdiction which affects erosion control, storm drainage, vegetation or tree removal, or a floodplain.

(b) Pre-Construction Conference Prior to Affecting Grading, Vegetation and/or Trees.

The City shall require that all contractors participating in the construction meet for a pre-construction conference to discuss the project prior to release of a site development permit and before any filling, excavation, clearing or removal of vegetation and any trees that are larger than six-inch caliper. All contractors shall be familiar with, and shall conform with, applicable provisions of the City's landscape and tree preservation regulations and any other applicable ordinances or regulations.

(c) Conditions Prior to Authorization

Prior to issuing a site development permit, the Director of Development Services shall be satisfied that the following conditions have been met:

(1) The final plat has been approved by the Commission (and any conditions of such approval have been satisfied);

(2) All required engineering plans and documents are completed and approved by the City Engineer;

(3) All necessary off-site easements and dedications required for City-maintained facilities and not shown on the plat have been conveyed to the City, such as by filing of a separate instrument, with the proper signatures affixed;

(4) All contractors participating in the construction shall be presented with a set of approved plans bearing the stamp of approval of the Public Works Director, and at least one set of these plans shall remain on the job;

(5) A complete list of the contractors, their representatives on the site, and telephone numbers where a responsible party may be reached at all times must be submitted to the City; and

(6) All applicable fees must be paid to the City.

(d) Nonpoint Source Pollution Controls and Tree Protection

All nonpoint source pollution controls, erosion controls, and tree protection measures and devices shall be in place, to the City Engineer's satisfaction, prior to commencement of construction on any property.

Sec. 9.02.208. Inspection and Acceptance of Public Improvements

(a) General procedure

(1) (The subdivider shall provide inspection service through his/her engineer to ensure that construction is being accomplished in accordance with the plans and specifications approved by the City Engineer.

(A) The subdivider shall notify the public works director 48 hours prior to commencement of construction. This notice shall give the location and date of the start of construction.

(B) The City shall have the right to inspect any construction work being performed to ensure that it is proceeding in accordance with the intent of the provisions of these subdivision regulations.

(C) Any change in design that is required during construction should be made by the licensed professional engineer whose seal and signature are shown on the plans. Another engineer may make revisions to the original engineering plans if so authorized by the owner of the plans, and if those revisions are noted on the plans or documents. All revisions shall be approved by the City Engineer.

(D) If the City Engineer finds, upon inspection, that any of the required public improvements have not been constructed in accordance with the approved construction plans, the City's standards and/or the design standards, then the developer shall be responsible for completing and correcting the deficiencies (at his/her expense) such that they are brought into conformance with the applicable standards.

(2) Testing laboratory services will be arranged by the City and paid for by the developer. It shall be the responsibility of Public Works Director (or designee) to coordinate the scheduling of all required tests with the testing laboratory. Testing shall be conducted in accordance with the procedures set forth in design standards for like work at the frequency specified thereon as directed by the City Engineer.

(b) Letter of Satisfactory Completion

(1) The City will only deem required public improvements satisfactorily completed when the applicant's engineer or RPLS has certified to the City Engineer (through submission of detailed sealed "as-built," or record, drawings of the property) drawings that indicate all public improvements and their locations, dimensions, materials and other information required by the City Engineer, and when all required public improvements have been completed.

(A) The "as-builts" shall also include a complete set of sealed record drawings of the paving, drainage, water, sanitary sewer and other public improvements, showing that the layout of the lines and grades of all public improvements are in accordance with engineering plans for the plat, and showing all changes made in the plans during construction, and containing on each sheet an "as-built" stamp bearing the signature and seal of the licensed professional engineer and the date.

(B) One reproducible drawing of the utility plan sheets containing the as-built information shall also be submitted.

(C) The developer's engineer and/or RPLS shall also furnish the City with a copy of the approved final plat and "as-built" engineering plans, in such a digital format (on disk) that is compatible with the City CAD system.

(2) When the requirements of subsection (1) above have been met to the Director of Development Services' and City Engineer's satisfaction, and when a maintenance bond has been received and approved as required in section 9.02.206 of this article, the City Manager shall issue a letter of satisfactory completion.

(c) Effect of Acceptance

Acceptance of the development shall mean that the developer has transferred all rights to all the public improvements to the City for use and maintenance, subject to the two-year maintenance bond (see section 9.02.206 of this article).

(2008 Code, pt. III-A, art. 6, sec. 8; Ordinance 862-2020 adopted 6/23/20)

Sec. 9.02.209. Issuance of Building Permits and Certificates of Occupancy

(a) Building permit

(1) A building permit shall only be issued for a lot, building site, building or use after the lot or building site has been officially recorded by a final plat approved by the Commission and filed for record at Collin County, and after all public improvements, as required by these subdivision regulations, have been completed.

(2) Notwithstanding the above, a permit may be issued as outlined below, provided that an agreement providing sufficient security (see section 9.02.202 of this article) is approved by the City Manager for the completion of all remaining public improvements.

(A) Building “Foundation-Only” Permit.

A building “foundation only” permit may be issued for a nonresidential or multifamily development. However, the building permit shall not be issued and building construction shall not be allowed to surpass the construction of fire protection improvements. In other words, the building shall not proceed above the slab level until all required fire lanes have been completed, and until all water lines serving fire hydrants have been completed, inspected and tested.

(B) Possible Release of Lots

The City Manager may release some residential building permits for not more than 10% of the lots within a new residential subdivision, provided that all public improvements have been completed for that portion of the development including those required for fire and emergency protection. No lot may be sold nor title conveyed until the final plat has been recorded with the Collin County clerk.

(b) Certificate of Occupancy

A certificate of occupancy shall only be issued for a building or the use of property after a final plat has been approved by the Commission and recorded with the Collin County clerk, and after all subdivision improvements have been completed. Notwithstanding the above, a certificate of occupancy may be issued provided that an agreement providing sufficient security (see section 9.02.202 of this article) is approved by the City Manager for the completion of all remaining public improvements, and provided that the structure is safely habitable in accordance with the City’s building codes. No lot may be sold nor title conveyed until the final plat has been recorded with the Collin County clerk.

§ 9.02.210 through § 9.02.240. (Reserved)

Division 7. FILING FEES; PLAT RE-SUBMISSION AND CONSTRUCTION INSPECTION FEES

Sec. 9.02.241. Schedule of Fees and Re-Submission Requirements

(a) Fee Schedule

All submissions required under these subdivision regulations shall be accompanied by the payment of fees in accordance with the current development fees schedule as set forth in article A.3000 of the fee schedule in appendix A of this code and any other applicable fees. The development fee schedule shall be as approved by the City Council and may be changed from time to time by the City Council. It is the applicant's responsibility to obtain and comply with the City's current fee schedule and submission requirements.

(b) Purpose

Such fees shall be collected for the purpose of defraying the costs of administrative, clerical, engineering, review, inspections, and testing necessary to properly review and investigate plats and subdivision construction.

(c) No Refund

Such fees shall be imposed and collected on all applications for approval of any type of plat, regardless of the action taken by the Commission and/or City Council thereon. The commission shall take no action until all required fees have been paid. The required fees shall not be refunded should the plat be disapproved.

(d) Re-Submission Fees

Re-submission of revised applications (such as preliminary plats) having substantial changes shall, at the discretion of the Director of Development Services, require complete reapplication and payment of fees.

(e) Expiration Of Application

Should a development application expire, or should it be denied by the Commission or the City Council, then that application ceases "pending" status and the application, and its corresponding series of development approvals and permits, shall be deemed null and void. Any future application for any type of development approval for that property shall be considered a new application, and shall be accompanied by new application materials, including new submission fees, and shall conform to all applicable City ordinances in effect at the time of submission of the new application.

(f) Recordation Fees

Recordation of plats with the Collin County clerk shall be the responsibility of the applicant.

(g) Construction Inspection Fee

(1) A construction fee as provided in the fee schedule in appendix A to this code shall be paid to the City prior to the construction of any facilities. The subdivider shall submit to the City Engineer an estimate of construction costs. The City Engineer shall either approve or disapprove the estimate and send a copy of said approval or disapproval to subdivider and City. If the estimate is disapproved, the City Engineer shall consult with subdivider and attempt to negotiate an acceptable estimate. If such negotiations are unsuccessful, the subdivider may appeal to the City Council to resolve the dispute. Construction shall not begin until the City Engineer has approved the estimate or in the alternative the City Council has approved the estimate, and the associated fees have been paid.

(2) The subdivider shall submit to City documentation showing actual cost of construction when construction is completed. If actual cost is less than the original estimate, the City shall refund the appropriate amount. If the actual construction cost is greater than the original estimate, the subdivider shall pay to the City the appropriate amount, based on the amount established in the fee schedule in appendix A to this code.

§ 9.02.242 through § 9.02.260. (Reserved)

Division 8. ENFORCEMENT; VIOLATIONS; PENALTIES

Sec. 9.02.260. Enforcement; Violations; Penalties

In addition to all other remedies and relief available to the City by law or in equity for a violation of these subdivision regulations, the following non-exclusive forms of relief shall be available to the City:

(1) Violations and Penalties

Any person who violates any of these regulations for lands within the corporate boundaries of the City shall be subject to a fine in accordance with the general penalty provided in section 1.01.009 of this code per day, or the highest amount authorized under law, whichever is lower, with each day constituting a separate violation.

(2) Civil Enforcement

Appropriate civil actions and proceedings may be maintained in law or in equity to prevent unlawful construction, to recover damages, to impose additional penalties, [or] to restrain, correct or abate a violation of these regulations, whether such violation occurs with respect to lands within the corporate boundaries of the City or within the City's extraterritorial jurisdiction. These remedies shall be in addition to the penalties described above.

(3) Withholding of Subdivision Acceptance

Pursuant to the provisions of division 6 of this article, the City may refuse to grant final acceptance of a subdivision that does not fully and completely comply with all terms and conditions of these subdivision regulations including, but not limited to, the refusal to issue building permits and certificates of occupancy, and the refusal to connect the property to City utilities and services.

Division 9. TABLES AND DIAGRAMS

Sec. 9.02.261. Tables and Diagrams

TABLE 1				
Type	**Designation**	**R.O.W.**	**Pavement Width**	**Median Width**
Expressway	E	150’ – 500’	NA	NA
Arterial	A	120’	2 @ 36’	26’
Major or minor collector, divided	C2D	90’	2 @ 24’	20’
Major or minor collector, undivided	C2U	80’	48’	None
Residential collector	C	60’	36’	None
Local collector	R	50’	31’	None

TABLE 2. NEIGHBORHOOD POINT SYSTEM - PRIMARY ENTRY POINT OPTIONS**	
Water feature *Must be lit at night with a minimum of 15' wide and 8' tall	1 point per side of entry street
Significant floral focal point on both sides of entry street *Minimum of 1,000 square feet and maintained by the HOA	2 points max
Any structure integrated as subdivision identification that exceeds 15' in height	3 points per side of entry 2 additional points if an archway is incorporated
Art or sculptures *Minimum height of 8'	2 points
Landscaping*** in median for the divided entry *Maintained by the HOA	5 points max 1 point for every 1,000 square feet
For every 5' increase in depth past the required 20' landscape buffer	1 point *5-point max
Additional trees planted along a street 60' or greater in width. Trees may be clustered.	2 points for every 10 additional ornamental trees or shrubs or 5 additional shade trees
Additional landscaping*** or features above and beyond the requirements *Must be annual and increased quality *Additional upgrades per the discretion of the Director of Development Services	2 points

* All items are subject to the discretion and approval of the planning director.
** Items within this section can count toward the Primary Entrance or within the subdivision, but not both.
***Landscaping for points shall consist of a combination of the following but not include sod/turf:

1. Mulched landscape bed;
2. Flowering perennials;
3. Shrubs;
4. Low ornamental grasses at least one foot (1') in height; and/or
5. Landscaping rock including but not limited to pea gravel, lava rocks, and river rocks.

TABLE 3. NEIGHBORHOOD POINT SYSTEM - PRIMARY ENTRANCE TERMINATION OPTIONS**	
Common area lot or public park at the entry	Based on the typical (median) residential lot 1 full lot = 2 points 2 full lots or greater = 4 points
Amenity center *Minimum of 3,000 sq. ft.	5 points max *3 points base with 1 point per additional 1,000 sq. ft.
Roundabout with a minimum of 2,000 square feet of landscaping*** *Must match the primary entrance landscaping and maintained by the HOA	5 points max 2 points base with 1 point per additional 1,000 square feet
Water feature *Must be lit at night with a minimum of 15' wide and 8' tall	3 points
Gazebo	3 points max 1 point for every 100 square feet
Boulevard with enhanced landscaping*** with seasonal color *Maintained by the HOA	5 points max 1 point for every 1,000 square feet
Sculpture or other artistry *Must be lit at night	2 points

*All items are subject to the discretion and approval of the Director of Development Services.
** Items within this section can count toward the Primary Entrance or within the subdivision, but not both.
***Landscaping for points shall consist of a combination of the following but not include sod/turf:

1. Mulched landscape bed;
2. Flowering perennials;
3. Shrubs;
4. Low ornamental grasses at least one foot (1') in height; and/or
5. Landscaping rock including but not limited to pea gravel, lava rocks, and river rocks.

TABLE 4. NEIGHBORHOOD POINT SYSTEM - SECONDARY ENTRANCE SUBDIVISION FEATURES**	
Divided secondary entry	1 point
Roundabout at the secondary entrance	1 point
Addition and maintenance of seasonal landscaping*** at the secondary entrance on a common area lot including a divided median or roundabout. *Maintained by the HOA and must correspond with the main entry and neighborhood landscaping	5 points max 1 point for every 1,000 square feet
Extended secondary entry length *Minimum ½ lot length. No additional points for additional length past the minimum.	1 point
Additional landscaping*** throughout the length of the extended drive *Maintained by the HOA and must correspond with the main entry and neighborhood landscaping	5 points max 1 point for every 1,000 square feet
Common area lot or public park at the terminus of secondary entrance	Based on the typical (median) residential lot ½ lot = 1 point 1 full lot = 2 points 2 full lots or greater = 4 points

*All items are subject to the discretion and approval of the Director of Development Services.

** Items within this section can count toward the Primary Entrance or within the subdivision, but not both.

***Landscaping for points shall consist of a combination of the following but not include sod/turf:

1. Mulched landscape bed;
2. Flowering perennials;
3. Shrubs;
4. Low ornamental grasses at least one foot (1') in height; and/or
5. Landscaping rock including but not limited to pea gravel, lava rocks, and river rocks.

TABLE 5. NEIGHBORHOOD POINT SYSTEM - SECONDARY ENTRANCE AND INTERIOR SUBDIVISION FEATURES	
Off-street parking spaces and dedicated on-street parking spaces adjacent to park land *5 additional parking spots at major, neighborhood focal points	2 points for every 5 spaces in addition to required parking
Pools and amenities *Per the discretion of the Director of Development Services	1 point per playing court, child play lot (minimum 2,000 square feet), fitness center/weight room, 2,000 square feet of surface water of a pool
Splash pad *Minimum of 3 fixtures per 1,000 sq. ft. and maintained by the HOA	4 points max 2 points base with 1 point for every additional 1,000 sq. ft. and 3 fixtures
Dog park *Minimum of 1 acre, with one dog waste station for every ¼ acre and maintained by the HOA	1 point base with 1 point for every additional acre, 5-acre max
For every 1,000 ft. of walking trail *Minimum of 8ft. wide with one bench and trash can per 1,000 ft. Trash to be maintained by the HOA	2 points
Additional bench and trash can in common areas *To be maintained by the HOA	1 point
Amenity center *Minimum of 3,000 sq. ft	5 points max *3 points base with 1 point per additional 1,000 sq. ft.

* All items are subject to the discretion and approval of the Director of Development Services
** Items within this section can count towards the Primary Entrance or within the subdivision, but not both.

DIAGRAM A. SHARED ACCESS DRIVEWAY AND CROSS ACCESS INTERNAL DRIVEWAY

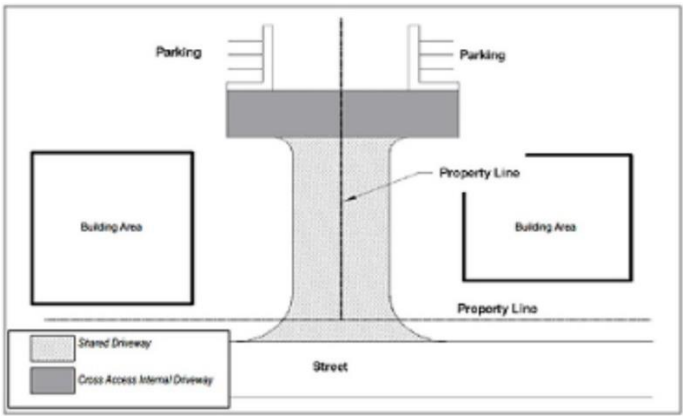

DIAGRAM B. EXAMPLES OF THE PRIMARY SUBDIVISION ENTRY FEATURES WITH POINTS

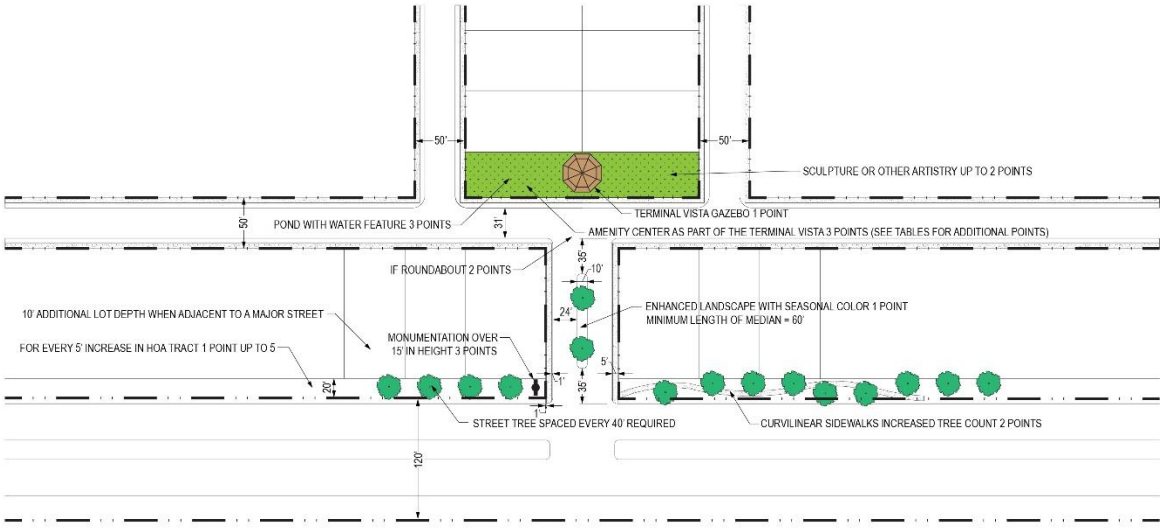

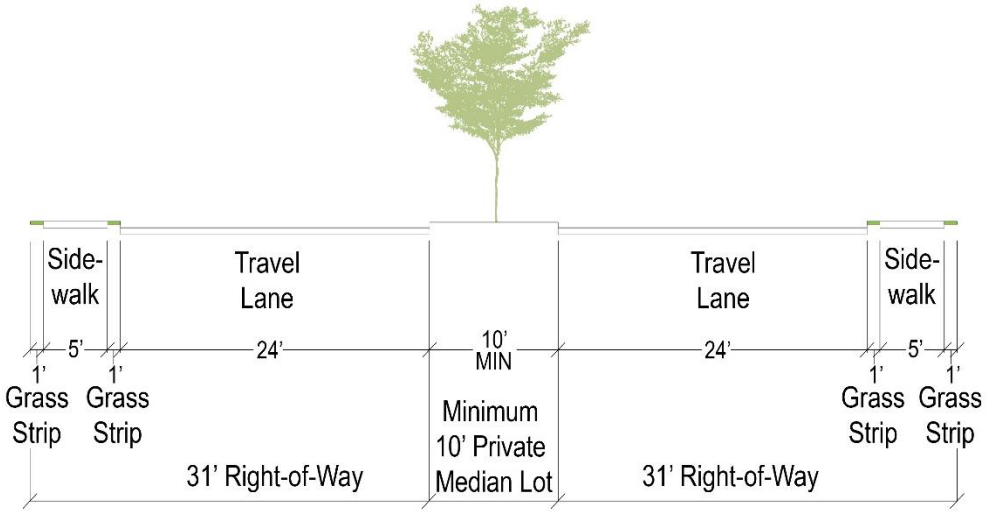

DIAGRAM C. VISIBILITY EASEMENT WITH SIGHT VISIBILITY TRIANGLES

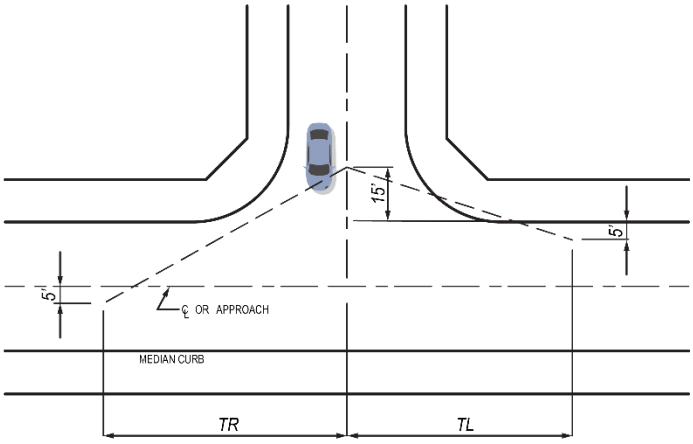

TABLE 9

MINIMUM SIGHT DISTANCE FOR
A CAR AT AN INTERSECTION

MPH	T
30	110 + 200 = 310
35	130 + 250 = 380
40	130 + 325 = 475
45	165 + 400 = 565
50	190 + 475 = 665

(AASHTO P138, BRAKE REACTION DISTANCE + STOPPING SITE DISTANCE)

Item No. 6.h.

Planning & Zoning Commission Agenda
Staff Report

Meeting Date: 9/9/2026
Staff Contact: Kevin Bates

AGENDA ITEM:
Consider/Discuss/Action on Amendments to Article 9.03 (Design Standards) of the City of Anna Code of Ordinances.

SUMMARY:
Engineering will provide a presentation on an update to the Anna Design Standards.

Attached is the redline version of the document for consideration. Recommended approval of the item as submitted. This item is tentatively scheduled for the September 22, 2026 City Council meeting.

BACKGROUND:
Article 9.03 (Design Standards) of the City of Anna Code of Ordinances is designed to implement Article 9.02 (Subdivision Regulations) and to provide for the orderly, safe, healthy and uniform development within the city limits and extraterritorial jurisdiction (ETJ). These standards are the minimum requirements and encourage more stringent requirements as appropriate.

Some requirements previously listed in the Subdivision Regulations have been moved to the Design Standards.

Staff recommends approval of the item as submitted.

ATTACHMENTS:
1. Draft (Article 9.03 Design Standards)





THE CITY OF
Anna

Design Standards

~~December~~ 2026~~5~~



City of Anna Public Works Department
www.annatexas.gov

Adopted: _____

Table of Contents

Section 1 GENERAL REQUIREMENTS 3
- 1.1 Introduction 3
- 1.2 Standards of Design 3
- 1.3 Standard Specifications for Construction 3
- 1.4 Standard Details 3
- 1.5 Materials Testing and Quality Control 4
- 1.6 Utilities to be Underground 4
- 1.7 Submittal to Utility Companies 4
- 1.8 Requirements of the Final Engineering Drawings 4
- 1.9 Final Acceptance 4
- 1.10 Warranty 4

Section 2 STREETS 5
- 2.1 General 5
- 2.2 Street Arrangement 5
- 2.3 Thoroughfare and Street Geometry 5
- 2.4 Turn Lanes 5
- 2.5 Median Openings, Width, Location and Spacing 11
- 2.6 Driveway Locations 11
- 2.7 Block Lengths 11
- 2.8 Street Intersections 11
- 2.9 Relation to Adjoining Streets 12
- 2.10 Dead End Streets, Cul-de-Sacs and Courts 12
- 2.11 Street Grades 12
- 2.12 Pavement Design 13
- 2.13 Parkways, Grades and Sidewalks 18
- 2.14 Driveways 18
- 2.15 Traffic Information and Control Devices 18
- 2.16 Street Lighting 19
- 2.17 Barrier Free Ramps 19
- 2.18 Off-Street Parking 19

Section 3 STORM DRAINAGE FACILITIES 27
- 3.1 Introduction 27
- 3.2 Storm Drainage Design Criteria 27

Section 4 VEGETATION 28
- 4.1 General 28

4.2 Coverage 29
4.3 Planting Season for Seeding 29
Section 5 WATER SYSTEM 30
5.1 General 30
5.2 Connections to Existing Distribution System 31
5.3 Location of Facilities 32
5.4 Water Service Connections 33
5.5 Materials and Installation 33
Section 6 WASTEWATER SYSTEM 36
6.1 General 36
6.2 Connections to Existing Wastewater Collection System 37
6.3 Location of Facilities 38
6.4 Flows in Wastewaters and Their Appurtenances 39
6.5 Materials and Installation 40
6.6 Testing 41
6.7 Wastewater Lift Stations and Force Mains 41
Section 7 MISCELLANEOUS REQUIREMENTS 46
7.1 Grading 46
7.2 Grading Permit 46
7.3 Private Utility Construction 46
7.4 Additional Permits or Approvals 49
7.5 Retaining Walls 49
Section 8.A STANDARD SPECIFICATIONS 50
Section 8.B MODIFICATIONS TO STANDARD SPECIFICATIONS 50
Section 8.C STANDARD DRAWINGS 73
Section 9 GENERAL CONSTRUCTION NOTES
Section 10 APPROVED MATERIALS LIST

Section 1 GENERAL REQUIREMENTS

1.1 Introduction

The “Design Standards and Specifications Manual” is designed to implement the provisions of the Subdivision Ordinance and to provide for the orderly, safe, healthy and uniform development of the area within the corporate city limits and within the area surrounding the City, extraterritorial jurisdiction (ETJ).

The 5th Edition of the NCTCOG Standard Specifications for Public Works Construction dated November 2017 as modified by the City of Anna Special Provisions are supplemental and are made a part of these Design Standards. These documents are to be considered as the minimum requirements of engineering design. The adherence to the requirements of these documents and/or the approval by the City of Anna and its agents in no way relieves the developer of the responsibility for adequacy of design, which may require more stringent standards than these, the completeness of plans and specifications or the suitability of the completed facilities. In unusual circumstances, the City of Anna may determine that designs other than those of the Standards are necessary and will inform the developer of such requirements before final engineering review.

The developer shall obtain authorization from the City of Anna, in writing, for any deviations from the requirements set forth in the Design Standards and Specifications Manual.

1.2 Standards of Design

The Design Standards, as adopted by the City of Anna, are set forth herein. These standards shall be considered as the minimum requirements, and it shall be the responsibility of the developer to determine if more stringent requirements are necessary for a particular development. It is not intended that the Design Standards cover all aspects of a development. For those elements omitted, the developer will be expected to provide designs and facilities in accordance with good engineering practice and to cause the facilities to be constructed utilizing first class workmanship and materials.

1.3 Standard Specifications for Construction

The City of Anna Special Provisions to the NCTCOG Standard Specifications for Public Works Construction as adopted by the City of Anna is referenced in this document. The Standard Specifications for construction set forth the minimum requirements for materials and workmanship for streets, parking lots, sidewalks, drainage, water, and wastewater systems. These specifications should be considered as minimum requirements and such additional requirements as the developer of the City may consider appropriate should be added as supplements.

1.4 Standard Details

In an effort to have uniformity and to facilitate maintenance, the City has adopted the North Central Texas Council of Governments (NCTCOG) Standard Drawings as modified by the City of Anna Special Provisions for certain facilities such as manholes, street sections, sidewalks, water, wastewater, storm water, curb inlets, barrier free ramps, etc. The City of Anna Special Provisions to the NCTCOG Standard Specifications are located in Section 8.B of this document. The NCTCOG Standard Specifications can be obtained from the North Central Texas Council of Governments at 616 Six Flags Drive, Suite 200, Arlington, Texas, 76005, (817) 640-3300.

1.5 Materials Testing and Quality Control

Testing of materials and quality control for all development construction shall be performed by a material testing laboratory and payment for such services shall be made by the contractor. It is the contractor's responsibility to show, through test procedures and results, that the work is in conformance with these design standards. All testing shall be completed with an employee or representative of the City of Anna present.

1.6 Utilities to be Underground

All utilities within a residential development shall be placed underground. Utilities are defined for this purpose as water pipelines, wastewater pipelines, storm water pipelines, natural gas pipelines, telephone wires, cable TV wires and electric wires. All rough grading must be completed prior to the installation of utilities. In case of special or unique circumstances, the City may grant variances or exceptions to this requirement. Any request for variance or exception should be submitted in writing to the City of Anna setting forth the justification for an exception. The granting of a variance or exception by the City will be in writing. No work will be accepted without written approval from the Director of Public Works or City designee, or in the case of franchise utilities, the City Council. Commercial developments may have overhead utilities as approved by the City.

1.7 Submittal to Utility Companies

The developer shall be responsible for submittal of information needed to design private utilities for the development. This information shall be submitted to TXU- Electric, ONCOR, Southwestern Bell, ATMOS-Gas, the cable TV franchise and any other appropriate utility.

Written confirmation shall be submitted with the final engineering drawings, verifying that the affected Utility companies have reviewed the final plat and easement description and agree that the easement locations and sizes are adequate and consistent with the design requirements of the utilities.

1.8 Requirements of the Final Engineering Drawings

The final engineering drawings will consist of drawings showing all information necessary to completely review the engineering design of improvements proposed for or affected by the site and sealed by a Registered Professional Engineer, licensed in the State of Texas.

1.9 Final Acceptance

After improvements have been constructed, the developer/engineer/architect of record shall be responsible for providing to the City "As Built" or "Record Drawings" (digital) in AutoCAD 2010 format and include pdf's with each sheet named and numbered accordingly. ~~mylars and one (1) set of "Black line prints"~~. The City will not accept the subdivision and/or provide final payment until all digital files have been submitted and accepted by the City~~the mylars and prints are submitted to the City.~~

~~Mylars and prints shall be sized 22" x 34". The City shall also be furnished pdf images of each sheet named according to the sheet title and sheet number and AutoCAD 2010 or later format drawings on a CD-ROM (No XREFS) of the "As Built" or "Record Drawings" (digital).~~

1.10 Warranty

As a condition of final acceptance, the contractor shall furnish a two (2) year maintenance bond in the amount of 100% of the public improvements, which shall become effective from the date of acceptance.

Section 2 STREETS

2.1 General

The street system, including the street layout, shall be in accordance with generally accepted engineering practices and in compliance with the Comprehensive Plan, the latest Thoroughfare Plan, the Zoning Ordinances, the Subdivision Regulations and other applicable regulations. The plans and specifications, and other applicable data, shall be submitted to the City for review. Construction shall not commence prior to approval of the plans and specifications by the City. All changes during construction shall be submitted to the City's Engineer for approval and acceptance by the City prior to any construction modifications.

2.2 Street Arrangement

Unless otherwise approved by the City, provisions shall be made for the extension of existing major arterials, collector streets and local streets in accordance with the Thoroughfare Plan and any specific street alignments as adopted by the City Council.

Off-center intersections will be considered for approval only for minor collector and local streets, and only when there is a minimum center line separation of 125', unless otherwise approved by the City's Engineer.

Within residential areas, the following design elements are encouraged: (A) Developing only a limited number of access points to arterial streets bordering the subdivision; (B) Incorporating curvilinear streets into the plan; (C) More than one point of access; and (D) Incorporating a discontinuous residential street network, which utilizes three-way intersections in lieu of four-way intersections. When these factors are incorporated into a residential street plan, the result is enhanced character and traffic safety.

2.3 Thoroughfare and Street Geometry Design Standards

Geometric design standards are presented in two formats within this section. Table 2.1, 2.2 and 2.3 identifies specific design criteria for each standard roadway type. ~~Figure 2.1A and 2.1B shows the t~~Typical cross-section for each standard roadway type are shown in our design details listed on our website. It is noted that dimensions shown in the tables below are to the ~~back~~ face of curb~~of curb~~, unless specifically identified otherwise.

Each roadway type is keyed to the City Thoroughfare Plan, with the exception of local streets. The reader is referred to this document for information as to the locations where these roadways are to be used.

TABLE 2.1

STREETS*		Arterial					Collector			Local			
		>P8D	P6D	M6D	M4D	M4U	C4U	C2U-C	C2U-R	R2U	R2U7	R2U5	Neo
Number of Through Lanes	-	8	6	6	4	4	4	2	2	2	2	2	2
Through Lane Width (ft)	-	12	12	12	12	12	12	20	18	15	12	12	18.5
Number of Left Turn Lanes 1	-	2	2	2	1	1	1	1	1	-	-	-	1
Left and Right Turn Lane Width (ft)	-	12	12	12	12	12	12	12	12	-	-	-	12
Left Turn Lane Storage (ft) 2	-	250	250	250	250	150	150	150	150	-	-	-	100
Left Turn Lane Transition (ft)	-	150	150	150	150	100	100	100	100	-	-	-	80
Right Turn Lane Storage (Decel/Accel 3) (ft) 4	-	225	225	225	225	150	150	100	100	-	-	-	-
Right Turn Lane Transition (Decel/Accel 3) (ft)	-	150	150	150	150	100	100	75	75	-	-	-	-
Median Width (ft)	Intersection	6	6	6	6	-	-	-	-	-	-	-	-
Parkway Width (ft)	Intersection	9	9	9	11.5	10	10	10	10	10	13	13	8
Paving Section Width (ft) (f-f)	Intersection	140	116	116	81	60	60	55	52	30	24	24	34
Minimum Right-of-Way Width (ft)	Intersection	164	140	140	110	80	80	75	72	50	50	50	50
Minimum Median Width (ft)	-	6	6	6	6	-	-	-	-	-	-	-	-
Median Width (ft)	Mid-Block	27	27	27	17	-	-	-	-	-	-	-	-
Parkway Width (ft)	Mid-Block	13.5	10.5	10.5	12.5	16	16	11.5	11.5	10	13	13	11.5
Paving Section Width (ft) (f-f)	Mid-Block	96	72	72	48	48	48	42	42	30	24	24	27
Minimum Right-of-Way Width (ft)	Mid-Block	150	120	120	90	80	80	65	65	50	50	50	50
Minimum Stopping Sight Distance (ft) 9	-	-	475	475	475	400	325	325	200	200	200	200	200
Minimum Driveway Spacing (ft) 5	-	390	390	310	280	280	160	160	70	40	70	70	40
Minimum Median Opening Spacing (ft) 6	-	900	900	690	690	-	-	-	-	-	-	-	-
Hourly Service Volumes 7 (Per Lane)	-	725	800	700	700	625	550	375	500	325	500	325	325
Hourly Service Volumes 7 (Per Copy)	-	5,800	4,800	4,200	2,800	2,500	2,200	600	825	600	825	600	600
Daily Service Volume 7	-	55,500	46,000	40,200	26,800	24,000	21,000	5,000	7,900	5,000	7,900	5,000	5,000
Design Speed (MPH)	-	50	50	50	45	40	40	35	35	30	30	30	30
Maximum Grade (%)	-	5	5	5	5	5	8	8	8	8	8	8	8
Minimum Horizontal Curvature Centerline Radius (ft)	-	1,000	1,000	1,000	1,000	600	600	450	450	100	100	100	100
Minimum Vertical Clearance (ft)	-	17	17	17	16	16	16	16	16	16	16	16	16
Minimum Vertical Curve (ft)	-	1,440	1,440	1,440	1,440	960	800	120	120	-	-	-	-

Formatted: Font: 11 pt, Bold

Formatted Table

TABLE 2.2

OTHER*	Alley		Fire Lane		Driveway	
	Com	Res	FL30	FL24	Com	Res
Number of Through Lanes	1	1	2	2	2	1
Through Lane Width (ft)	16	12	15	12	15	10
Paving Section Width (ft) (f-f)	16	12	30	24	30	10
Minimum Right of Way Width (ft)	20	16	-	-	50	30
Parkway Width (ft)	2	2	-	-	10	10
Paving Section Width (ft) (f-f)	16	12	30	24	30	10
Minimum Stopping Sight Distance (ft)	200	200	-	-	200	100
Minimum Driveway Spacing (ft)	44	20	-	-	-	-
Minimum Vertical Clearance (ft)	16	16	16	16	-	-

TABLE 2.3

Minimum Radius At Intersections Between*:	Arterial	Collector	Local	Alley	Fire Ln	Driveway	
	-	-	-	-	-	Com	Res
Arterial 8	45	45	40	****	30	30	****
Collector 8	45	40	40	****	30	30	10
Local 8	40	40	25	24	30	20	10
Alley	****	****	24	40	30	30	10
Fire Lane	30	30	30	30	30	30	****
Drive Commercial	30	30	20	30	30	20	****
Drive Residential	****	10	10	5	****	****	****

** Data in these tables are to be considered guidelines. The data may be modified for specific and unique situations as outlined in a traffic study approved by the City Engineer.*

1 — Dual left turn lanes are required at arterial-to-arterial intersections.

2 — Left turn storage from arterial-to-arterial may be reduced traffic study approved by the City Engineer.

3 — Acceleration lane may be required by the City Engineer.

4 — City Engineer approval needed for driveways within the right turn lane storage area.

5 — Driveway spacing is measured edge to edge. City Engineer may allow up to a 35% reduction in spacing.

6 — All median opening spacing is measured nose to nose. City Engineer may allow a 35% reduction in spacing. Hooded median openings may be approved by the City Engineer at 400-foot spacing to any opening. City Engineer approval needed for any median opening.

7 — Hourly service volumes are at level of service (LOS) "E": Design LOS is "C"

8 — 40-foot radii between streets will be increased to 70-foot radii if channelization is provided.

9 — These distances assume level terrain.

***** — City Engineer approval required*

P8D — Eight lane principal divided arterial

P6D — Six lane principal divided arterial

M6D — Six lane minor divided arterial

M4D — Four lane minor divided arterial

M4U — Four lane minor undivided arterial

C4U — Four lane undivided collector

C2Uc — Two lane undivided commercial collector

C2Ur — Two lane undivided residential collector

R2U — Two lane undivided residential local with 30-foot paving section

R2U7 — Two lane undivided residential local (24' pav sec & 70' ROW)

R2U5 — Two lane undivided residential local (24' pav sec & 50' ROW)

Neo — Neo-traditional as defined in Section 8.05.1.12 on page 8.20

Com — Commercial

Res — Residential

FL30 — 30-foot fire lane

FL24 — 24-foot fire lane

Formatted Table

Formatted Table

Formatted: Font: 9 pt, Italic

Formatted: Indent: Left: 0.5", Right: 0.8", Space Before: 0 pt

Formatted: Font: 9 pt, Italic, Highlight

Formatted: Font: 9 pt, Italic, Highlight

Formatted: Font: 9 pt, Italic

Formatted: Indent: Left: 0.5"

~~2.4 Turn Lanes~~

~~All left turn storage areas shall be ten (10) feet wide with minimum storage requirements for left-turn lanes as in Figure 2.2. The transition curves used in left-turn lanes shall be two (2), 250-foot radius reverse curves with a total transition length of 100 feet.~~

TABLE 2.1

GEOMETRIC DESIGN STANDARDS

Design Element	Principal Arterial Divided	Minor Arterial Divided		Major Collector Undivided	Minor Collector Undivided	Local (Residential)
Number Traffic Lanes	6	4		4	2	2
Minimum Lane Width (Feet)	12	12		11	11+ 2 Parking	15
Minimum R.O.W. Width* (Feet)	120	80		80	60	50
Design Speed (M.P.H.)	45	40		40	40	25
Stopping Sight Distance (Feet)	400	325		325	325	325
Median Width ** (Feet)	16	14		—	—	—
Minimum Lateral Clearance (Feet)	6	6		6	6	—
Parking Permitted	NO	NO		NO	Com. Some Res. Yes	Res. Yes
Minimum Horizontal Centerline Curvature (Feet)	1200	850		Com. 700 Res. 600	Com. 500 Res. 350	Res. 200 ELBOW – 50'

Formatted Table

*** RIGHT-OF-WAY REQUIREMENTS FOR STATE HIGHWAYS AND/OR THE PROVISION OF RIGHT TURN LANES OR OTHER INTERSECTION IMPROVEMENTS MAY EXCEED THIS MINIMUM R.O.W. STANDARDS.**

**** LARGER MEDIANS MAY BE REQUIRED TO PROVIDE FOR MULTIPLE TURN LANES.**

***** LOCAL RESIDENTIAL CUL-DE-SACS SHALL HAVE A MINIMUM R.O.W. RADIUS OF FIFTY FEET (50').**

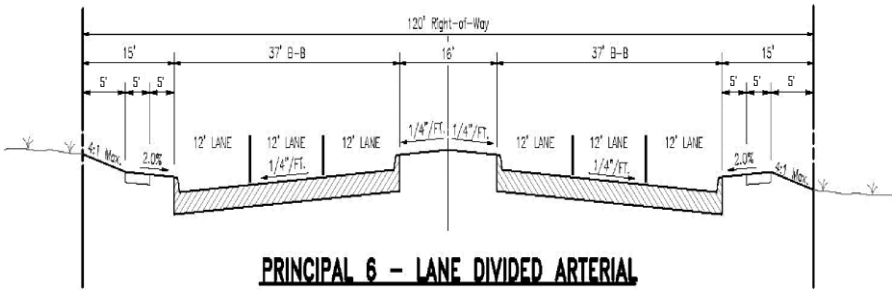

PRINCIPAL 6 – LANE DIVIDED ARTERIAL

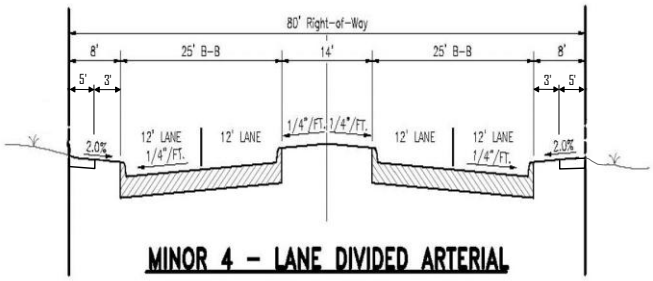

MINOR 4 – LANE DIVIDED ARTERIAL

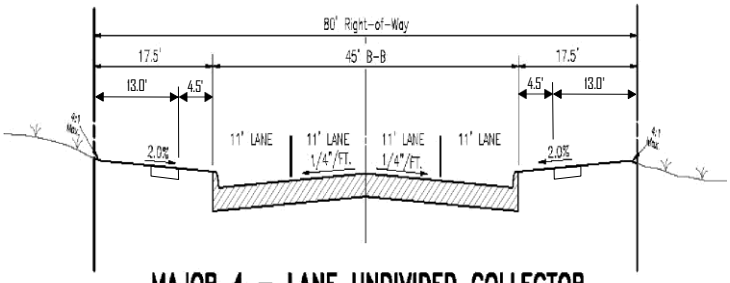

MAJOR 4 – LANE UNDIVIDED COLLECTOR

Figure 2.1A

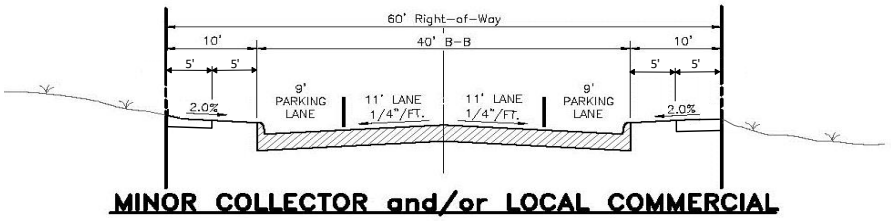

MINOR COLLECTOR and/or LOCAL COMMERCIAL

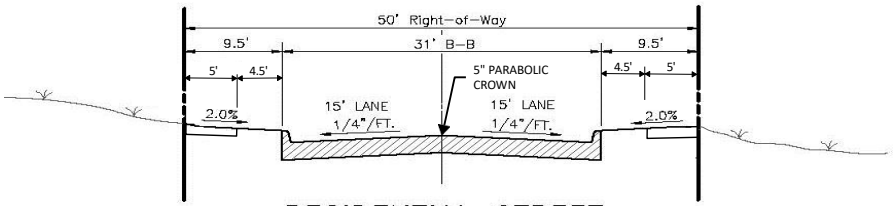

RESIDENTIAL STREET

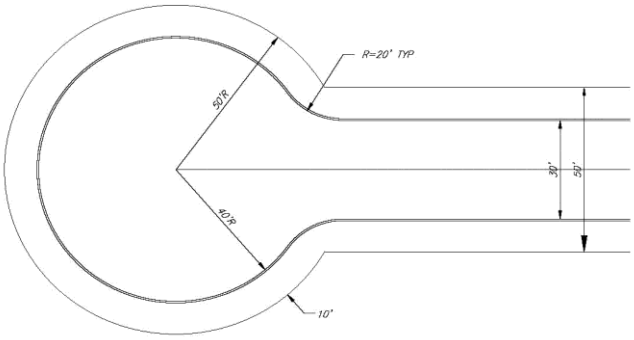

TYPICAL CUL-DE-SAC PLAN VIEW

~~Figure 2.2~~

~~MEDIAN DESIGN STANDARDS~~

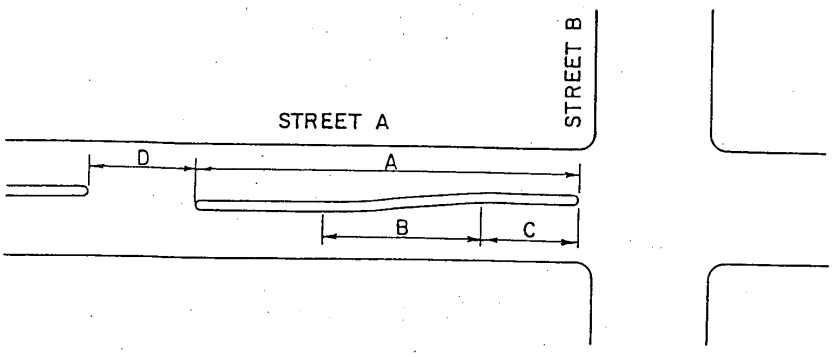

INTERSECTING STREET TYPE		MINIMUM LENGTH (FEET)			
STREET A	STREET B	A	B	C*	D**
Principal Arterial	Principal Arterial	310	100	150	60
Principal Arterial	Minor Arterial	260	100	100	60
Principal Arterial	Major Collector Minor Collector	260	100	100	60
Principal Arterial	Local/Private	220	100	60	60
Minor Arterial	Principal Arterial	310	100	150	60
Minor Arterial	Minor Arterial	260	100	100	60
Minor Arterial	Major Collector Minor Collector	260	100	100	60
Minor Arterial	Local/Private	220	100	60	60

LEFT-TURN STORAGE AREA WIDTH 10' MINIMUM
MEDIAN WIDTH (SEE GEOMETRIC DESIGN STANDARD FOR PRINCIPAL AND MINOR ARTERIAL).
*MINIMUM LENGTH – ACTUAL LENGTH DEPENDENT UPON ANTICIPATED TURN VOLUMN
** OR STREET WIDTH + 8 FEET – WHICHEVER IS GREATER

Figure 2.3

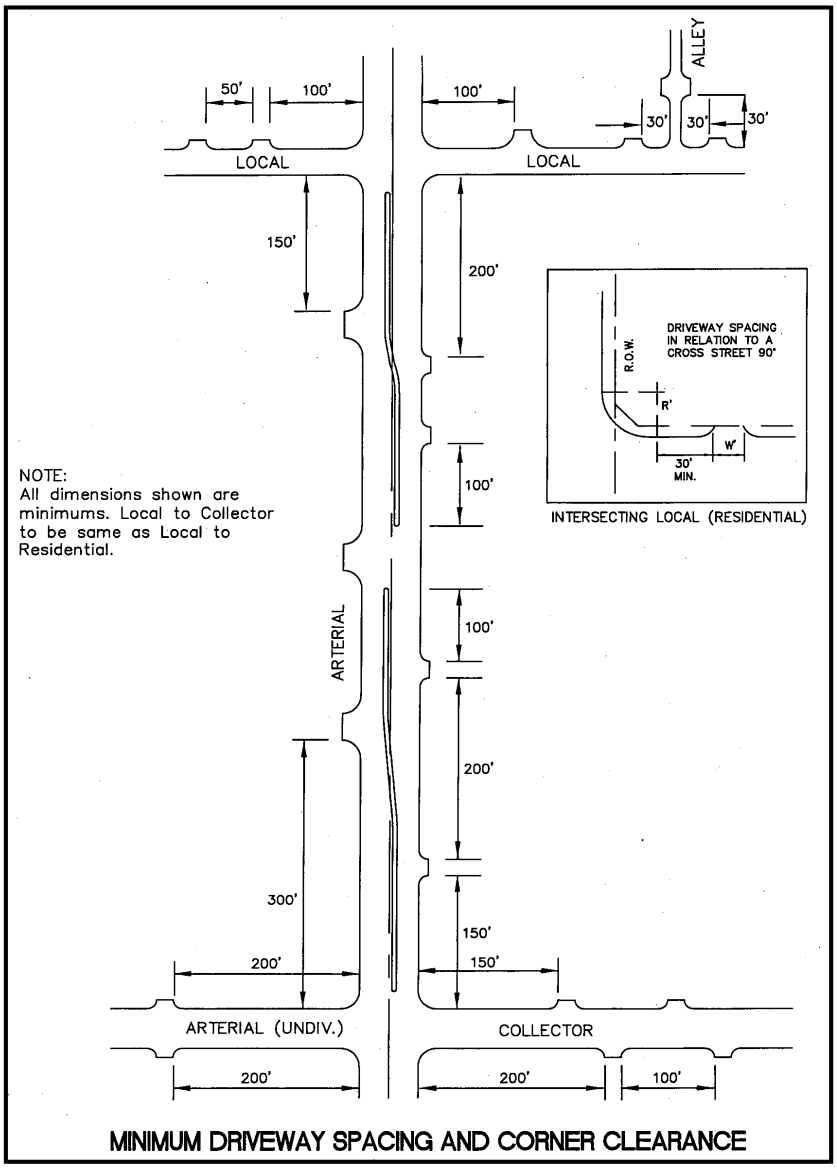

MINIMUM DRIVEWAY SPACING AND CORNER CLEARANCE

~~2.5 Median Openings, Width, Location and Spacing~~

~~Arterial thoroughfares in Anna are to have raised medians. Arterials having single lane two-way left turn lanes are discouraged and may be allowed only in special circumstances with the approval of the City Council.~~

~~Median openings at intersections shall be from right-of-way to right-of-way of the intersecting street, unless otherwise approved by the City's Engineer.~~

~~The width of mid-block median openings shall not be less than 60 feet, or greater than 70 feet.~~

~~Using the above requirements, examples of the minimum distance between median openings on a divided street where left-turn storage is provided in both directions are:~~

~~A. 310 feet from nose to nose of the median from the intersection of two major thoroughfares to a street or drive (see Figure 2.2);~~

~~B. 260 feet from nose to nose of the median from the intersection of two secondary thoroughfares or a secondary thoroughfare and a major thoroughfare to a residential street or a drive, and;~~

~~C. 220 feet from nose to nose of the median for intersection combinations of drives and/or residential streets.~~

~~2.6~~2.4 Driveway Locations

Minimum standards for driveway separation accessing the same site are shown in Figure 2.1~~3~~. This standard applies to all non-residential uses.

There is a minimum distance upstream and downstream from adjacent intersections within which driveways should not be located. This separation distance varies with the classification of street and is shown in Figure 2.1~~3~~. This standard applies to all non- residential users.

At mid-block access points, there is a minimum distance from a median nose, within which driveways should not be located. This is shown in Figure 2.1~~3~~ and is equally applicable along both major and minor arterials for non-residential uses.

~~2.7~~2.5 Block Lengths

In general, streets shall be provided at such intervals as to serve cross traffic adequately and to intersect with existing streets. Where no existing plats control, the blocks shall be not more than 1,200 feet in length. Block arrangements must provide access to all lots, and in no case, shall a block interfere with traffic circulation.

~~2.8~~2.6 Street Intersections

More than two streets intersecting at one point shall not be allowed. All streets and thoroughfares should intersect other streets and thoroughfares at an angle of ninety (90) degrees unless otherwise approved by the City's Engineer.

Arterial and collector street intersections shall have property line corner clips with a minimum tangent distance of thirty (30) feet. Residential streets shall not normally be

required to have a corner clip at their intersection with other streets or thoroughfares, but a 25-foot by 25-foot sidewalk corner easement will be required.

~~Curb radii at intersections shall have a minimum radius of thirty (30) feet along arterials, twenty-five (25) feet along' collectors and twenty (20) feet along residential streets.~~

In any case where streets intersect at an angle of other than ninety (90) degrees, the City shall review and comment regarding non-standard right-of-way corner clips and curb return radii.

~~2.9~~2.7 Relation to Adjoining Streets

The system of streets designed for the development, except in approved cases, must connect with streets already dedicated in adjacent developments. Where no adjacent connections are platted, the streets must be the reasonable projection of streets in the nearest subdivided tracts and must be continued to the boundaries of the tract development, so that other developments may eventually connect with the proposed development.

At the intersection of a new subdivision street with an existing boulevard arterial, the Developer of the subdivision shall construct a median opening in the boulevard, unless otherwise directed by the City in writing.

Strips of land controlling access to or egress from other property or any street or alley or having the effect of restricting or damaging the adjoining property for development or subdivision purposes or which will not be taxable or accessible for special improvements shall not be permitted in any development unless such reserve strips are conveyed to the City on fee simple. The City Planning Director or the City's Engineer makes this determination. When such access is needed to maintain permanent City owned utilities, the roadway will be an improved right-of-way. If the utilities are temporary, an improved easement may be approved.

~~2.10~~2.8 Dead End Streets, Cul-de-Sacs ~~and Courts~~

a. The maximum length of a cul-de-sac or dead-end street with a permanent turnaround shall be 600 feet, except the length of culs-de-sac may exceed 600 feet provided that the fire marshal has determined that emergency access is available to all units to be served by the cul-de-sac. In no case shall a cul-de-sac length exceed 1,000 feet, except those permitted for estate lot subdivisions.

b. Minimum right-of-way width (diameter) and pavement width of turnarounds shall be as follows:

~~Cul-de-sacs are permitted and encouraged within residential subdivisions. Use of this design shall provide proper access to all lots and shall not exceed six hundred (600) feet in length, measured from the center of the cul-de-sac to the center of the intersecting street (not a dead-end street). Specific aspects of the standard cul-de-sac design are given in Figure 2.1B. In lieu of the typical design shown, the City may approve alternative concepts for a specific application.~~

Type of Use	Right-of-Way Width	Pavement
Single-Family, Two-Family and Townhome	100 feet	80 feet
All Other Uses	120 feet	100 feet

c. Temporary dead-end streets shall be approved by the city engineer.

d. The minimum slope for cul-de-sacs and eyebrows will be 0.75 percent with a valley gutter to facilitate the drainage.

Formatted: Indent: First line: 0.04", Right: 0.8", Space Before: 10.9 pt
Formatted: Font: (Default) Arial, Font color: Custom Color(RGB(39,39,39)), Not Expanded by / Condensed by
Formatted: Default Paragraph Font, Font: (Default) Arial, 12 pt, Font color: Custom Color(RGB(39,39,39)), Not Expanded by / Condensed by , Pattern: Clear
Formatted: Font: (Default) Arial, Font color: Custom Color(RGB(39,39,39)), Not Expanded by / Condensed by
Formatted: Default Paragraph Font, Font: (Default) Arial, 12 pt, Font color: Custom Color(RGB(39,39,39)), Not Expanded by / Condensed by , Pattern: Clear
Formatted: Font: (Default) Arial, Font color: Custom Color(RGB(39,39,39)), Not Expanded by / Condensed by
Formatted: Default Paragraph Font, Font: (Default) Arial, 12 pt, Font color: Custom Color(RGB(39,39,39)), Not Expanded by / Condensed by , Pattern: Clear
Formatted: Font: (Default) Arial, Font color: Custom Color(RGB(39,39,39)), Not Expanded by / Condensed by
Formatted: Default Paragraph Font, Font: (Default) Arial, 12 pt, Font color: Custom Color(RGB(39,39,39)), Not Expanded by / Condensed by , Pattern: Clear
Formatted: Font: (Default) Arial, Font color: Custom Color(RGB(39,39,39)), Not Expanded by / Condensed by
Formatted: Default Paragraph Font, Font: (Default) Arial, 12 pt, Font color: Custom Color(RGB(39,39,39)), Not Expanded by / Condensed by , Pattern: Clear
Formatted: Font: (Default) Arial, Font color: Custom Color(RGB(39,39,39)), Not Expanded by / Condensed by
Formatted ...
Formatted ...
Formatted ...
Formatted ...
Formatted ...
Formatted ...
Formatted ...
Formatted ...
Formatted ...
Formatted ...
Formatted ...
Formatted ...
Formatted ...
Formatted ...
Formatted ...
Formatted Table
Formatted ...
Formatted: Font color: Custom Color(RGB(39,39,39))
Formatted ...
Formatted: Font color: Custom Color(RGB(39,39,39))

~~2.11 Street Grades~~

~~Arterial streets may have a maximum grade of seven and one-half (7½) percent, for a maximum continuous distance of two hundred (200) feet. Collector streets may have a maximum grade of six (6) percent. 'Residential streets may have a maximum grade of eight (8) percent, unless otherwise approved by the City, where the natural topography is such as to require steeper grades. All streets must have a minimum grade of at least five-tenths (0.5) of one (1) percent. Centerline grade changes with an algebraic difference of more than one (1) percent shall be connected with vertical curves in compliance with the minimum length requirements set forth in Table 2.2.~~

Formatted: Right: 0.75"

~~2.12~~2.9 Pavement Design

Pavement and pavement subgrades (Roadway and Firelanes) shall be designed based on representative onsite soil sub-surface conditions. Pavement design calculations shall be prepared by Professional Engineer licensed in the State of Texas and be submitted with the preliminary construction plans for review as part of the construction plan review process. The submittal shall include the pavement design traffic loadings and design life.

Pavement and subgrade shall be as follows:

A. Residential and Firelane Pavement: Reinforced concrete pavement thickness shall be determined by pavement design calculations. Minimum thickness of reinforced concrete pavement shall be no less than six (6) inches reinforced with No. 4 bars at ~~18~~12-inch centers ~~both~~ each way~~s~~. Concrete strength shall be NCTCOG Item 303.3.4.2. Class C (4,000 psi Compressive Strength in 28-days), with a cement content of not less than 6 sacks per cubic yard. Subgrade preparation and thickness shall be based on pavement design calculations and shall be lime stabilized no less than six (6) inches in depth. All curbs shall be 6" monolithic barrier curbs.

B. Arterial, Minor Collector, and Major Collector Pavement: Reinforced concrete pavement thickness shall be determined by pavement design calculations if varied from below but shall be at minimum to the standard below.~~:~~ Minimum thickness of reinforced concrete pavement shall be no less than nine~~eight~~ (~~8~~9) inches reinforced with No. ~~4~~ 5 bars at ~~18~~12-inch centers ~~both~~ each way~~s~~. Concrete strength shall be NCTCOG Item 303.3.4.2. Class C (4,000 psi Compressive Strength in 28-days), with a cement content of not less than 6 sacks per cubic yard. Subgrade preparation and thickness shall be based on pavement design calculations and shall be lime stabilized no less than eight (8) inches in depth.

C. Subgrade: Subgrade design shall be based on representative onsite subsurface soil conditions and testing. Testing shall be in accordance with the NCTCOG Standard Specifications for Public Works Construction and be completed by a geotechnical testing lab. The geotechnical investigation shall be submitted to the City as part of the pavement design submittal. In general, the soils testing shall include representative soil borings of the site and the testing of Atterburg limits. Based on the testing results, the pavement design shall provide the percentage of the subgrade lime stabilization proposed. Stabilization shall span the width of the street, back-of-curb to back-of-curb, plus twelve (12) inches beyond the back of curb on each side and be a minimum of six (6) inches in depth for 6-inch pavement and eight (8) inches in depth for ~~8~~9-inch pavement, unless greater extents recommended by the geotechnical investigation. Subgrades shall be mechanically compacted to ninety-five (95) percent standard proctor densities at optimum moisture. At minimum subgrade shall have at least forty (36) lbs/sy for eight (8) inch and fifty-three (53) lbs/sy for eight (8) inch subgrade.

There shall be no driveway cuts unless approved by the City. Contractors shall perform a horizontal curb cut for all driveways. Future driveway cuts on existing streets shall have proposed driveway pavement constructed within 48-hours of driveway excavation or a temporary concrete mud mat shall be constructed to protect the existing street subgrade from excessive moisture penetration or moisture evaporation.

Commented [KB1]: Potential replace with chart?

Formatted: Tab stops: 7.04", Left

~~13~~

Formatted: Body Text, Space Before: 8.55 pt, Tab stops: 7.04", Left

TABLE 2.2

CREST VERTICAL CURVES

Design Speed (MPH)	Coeff. of Friction (a)	Stopping Sight Dist. (Ft.)	Stopping Sight Dist. Rounded for Design (Ft.)	K	K Rounded for Design
15	0.42	72.98	75	4.01	5
20	0.40	106.83	125	8.59	10
25	0.38	146.70	150	16.19	20
30	0.36	193.58	200	28.20	30
35	0.34	248.72	250	46.55	50
40	0.32	313.67	325	74.03	80
45	0.31	383.12	400	110.44	120

(a) AASHTO; p. 16

TABLE 2.2. Cont'd

CREST VERTICAL CURVES

ROUNDED

MINIMUM LENGTH OF VERTICAL CURVE IN FEET

For Speeds and K Values Shown Below (L=KA)

Algebraic Grade Diff. (%) (A)	MPH K	15 5	20 10	25 20	30 30	35 50	40 80	45 120
1		5	10	20	30	50	80	120
2		10	20	40	60	100	160	240
3		15	30	60	90	150	240	360
4		20	40	80	120	200	320	480
5		25	50	100	150	250	400	600
6		30	60	120	180	300	480	720
7		35	70	140	210	350	560	840
8		40	80	160	240	400	640	960
9		45	90	180	270	450	720	1080
10		50	100	200	300	500	800	1200
11		55	110	220	330	550	880	1320
12		60	120	240	360	600	960	1440
13		65	130	260	390	650	1040	1560
14		70	140	280	420	700	1120	1680
15		75	150	300	450	750	1200	1800

TABLE 2.2 Cont'd

SAG VERTICAL CURVES

Design Speed (MPH)	Coeff. of Friction (a)	Stopping Sight Dist. (Ft.)	Stopping Sight Dist. Rounded for Design (Ft.)	K	K Rounded for Design
15	0.42	72.98	75	8.13	10
20	0.40	106.83	125	14.75	20
25	0.38	146.70	150	23.56	30
30	0.36	193.58	200	34.78	40
35	0.34	248.72	250	48.69	50
40	0.32	313.67	325	65.69	70
45	0.31	383.12	400	84.31	90

(a) AASHTO, p. 316

(b) AASHTO, p. 312

TABLE 2.2 Cont'd

SAG VERTICAL CURVES

ROUNDED

MINIMUM LENGTH OF VERTICAL CURVE IN FEET

For Speeds and K Values Shown Below

(L KA)

Algebraic Grade Diff. (%) (A)	MPH K	15 10	20 20	25 30	30 40	35 50	40 70	45 90
1		10	20	30	40	50	70	90
2		20	40	60	80	100	140	180
3		30	60	90	120	150	210	270
4		40	80	120	160	200	280	360
5		50	100	150	200	250	350	450
6		60	120	180	240	300	420	540
7		70	140	210	280	350	490	630
8		80	160	240	320	400	560	720
9		90	180	270	360	450	630	810
10		100	200	300	400	500	700	900
11		110	220	330	440	550	770	990
12		120	240	360	480	600	840	1080
13		130	260	390	520	650	910	1170
14		140	280	420	560	700	980	1260
1		150	300	450	600	750	1050	1350

~~2.13~~2.10 Parkways, Grades and Sidewalks

All parkways shall be constructed to conform to top of curb grades with a standard transverse slope of one-quarter (¼) inch per foot rise from top of curb to right-of-way.

Where the natural topography is such as to require steeper grades, transverse slopes (except for sidewalk) up to three-quarter (¾) inch per foot may be used with approval of the City.

Sidewalks shall be provided for all residential streets in subdivisions zoned for one- or two-family dwellings and on all streets designated on the adopted Master Thoroughfare Plan. Barrier free ramps and sidewalks along screening walls, landscaped areas, trails or in parks, shall be installed by the Developer with street construction and the sidewalks in front of residential lots shall be installed by the home builder. The City may require sidewalks in other locations. Where provided, there shall not be less than five (5) feet in width with the inside edge of the sidewalk to be placed one (1) foot off the property line and located wholly within the dedicated street right-of-way, sidewalk corner easement or road easement in the case of private streets. This requirement may be waived by the City Council.

Commented [KB2]: Thoughts on removal of this?

Sidewalks placed adjacent to the back of the curb must be six (6) feet wide and approved by the City's Engineer.

Sidewalks shall be of concrete having a minimum of 4,000-psi compressive strength in 28 days. The concrete thickness shall be four (4) inches reinforced with No. 3 bars at 18-inch centers both ways. A minimum of 1½ inches of sand must be placed under sidewalk. Subgrade (including sand) shall be mechanically compacted to 95% density.

~~2.14~~2.11 Driveways

A. Residential: Residential driveways to serve two car garages shall be not less than eleven (11) feet nor more than twenty (20) feet in width at the property line. The width of the driveway will be larger at the garage for a three car (width to be twenty-eight (28) feet). Shared driveways and garages larger than three cars shall be a case by case basis. Residential driveways shall be separated from one another by a distance of at least ten (10) feet. The radii of all residential driveway returns shall be a minimum of five (5) 'feet and shall not extend past the adjoining property line. The driveway approaches devoted to one use shall not occupy more than sixty percent (60%) of the frontage abutting the roadway or alley.

B. Multi-Family and Non-Residential: Driveways providing access to multi-family or non-residential uses shall generally have widths between twenty-four (24) and forty-five (45) feet when measured at their narrowest point near, or at, the property line. The minimum radius for these uses shall be twenty (20) feet. Larger radii are encouraged. Limitations on permissible locations for these driveways are addressed in Section 2.6, Driveway Locations. Driveway radii returns shall not extend across abutting property lines.

~~2.15~~2.12 Traffic Information and Control Devices

The developer shall arrange for the installation of all pavement striping, regulatory, warning and guide signs, including posts, as shown on the approved plans. Street name signs shall be installed at each intersection. All traffic control devices shall be designed in accordance with the current addition of the TMUTCD. Examples of regulatory, warning, information and guide signs are as follows:

A. Regulatory signs shall include, but are not limited to, STOP, 4-WAY, YIELD, KEEP RIGHT and speed limit signs.

B. Warning signs shall include, but are not limited to, DEAD END, NO OUTLET, DIVIDED ROAD and PAVEMENT ENDS.

C. Guide signals shall include, but are not limited to, street name signs, DETOUR, direction arrow and advance arrow.

D. Traffic striping shall be provided by the developer as shown on the approved plans.

The street signs shall be extruded and engineering grade. Sign posts shall be galvanized steel and set in concrete. The developer shall be responsible for the expenses incurred by the City for manufacture and installation of these signs.

~~2.16~~2.13 Street Lighting

The city requires street lighting to improve the safety and usability of all roadways. The following requirements are to establish the minimum standards regarding the design and installation of street lighting, but should be considered flexible. Modifications to the standards will be considered by the director of engineering if the modifications incorporate new safety designs, achieve desired aesthetic treatment, or are shown to be more energy efficient. All new street light installations shall meet the approval of the director of engineering and may be reviewed by the Anna Police Department.

1. Thoroughfare street lights. This section applies to all streets identified on the City of Anna Thoroughfare Plan as arterials or divided collectors. Thoroughfare street light elements shall become the property of the City of Anna upon final acceptance of the subdivision or project. The elements (from the light sources to the meter) include all items necessary to provide such illumination. Thoroughfare street lighting shall conform to the following requirements:

   a. All thoroughfare lighting poles shall have the following attributes:

      i. Thirty-foot height.
      ii. Installation location shall be in the median.
      iii. Dual fixtures installed, if located in the median. Single fixtures are acceptable in situations that require parkway installation or the median width makes the installation of dual fixtures impractical.
      iv. Capable of withstanding a 100 mph wind, with 30 percent gust factor.
      v. Mounted on a cast-in-place pole-base, as illustrated in the Engineering Standard Details, using a 14-inch bolt pattern for the anchor bolts. Mounting bolts shall be a breakaway type bolt.
      vi. Galvanized with Powder-coated black, seven-inch × seven-inch at base, and tapered (for cobra).
      vii. Square, steel base cover, galvanized with powder-coated black finish of the pole.

   b. All thoroughfare fixtures shall have the following attributes:
      i. Light emitting diode (LED) lamps, 250 watt equivalent. LEDs shall be a color of 4000K.
      ii. The use of cut-off optics is required to achieve a fully shielded (as defined in articles of this Code) light source. This requirement shall not be modified.
      iii. Photometrics that minimize light pollution onto private property (at the ROW line) and provide an average intensity of one footcandle within the right-of-way. In the case of parkway installed lighting, forward-throw photometrics will be required. A photometric plan, signed and sealed by a licensed professional engineer, is required and shall be submitted to the engineering department for review.
      iv. Cobra head installation, the fixture shall be black and be equivalent to on of the following:
         1) Phillips LUMEC RoadFocus Cobra Head Medium (RFM -108W48 LED-4K-G2-R3M-UNV-SRD-RCD7-BK)
      v. Light spacing shall be determined by Texas Licensed Professional Engineer.
      vi. A UbiCell UGU photocell is required to be attached to the 7 pin plug on top of the light housing.

Formatted: Font: (Default) Arial, Font color: Gray-85%, Not Expanded by / Condensed by
Formatted: Font: (Default) Arial, Not Italic, Font color: Gray-85%, Not Expanded by / Condensed by
Formatted: Font: (Default) Arial, Font color: Gray-85%, Not Expanded by / Condensed by
Formatted: Font: (Default) Arial, Font color: Gray-85%, Not Expanded by / Condensed by , Pattern: Clear
Formatted: Font: (Default) Arial, Font color: Gray-85%, Not Expanded by / Condensed by
Formatted: Font: (Default) Arial, Font color: Gray-85%, Not Expanded by / Condensed by , Pattern: Clear
Formatted ...
Formatted ...
Formatted ...
Formatted ...
Formatted ...
Formatted ...
Formatted ...
Formatted ...
Formatted ...
Formatted ...
Formatted: Font: 10.5 pt, Font color: Gray-85%
Formatted ...
Formatted ...
Formatted ...
Formatted ...
Formatted ...
Commented [KB3]: Verify the pole type.
Formatted ...
Formatted ...
Formatted ...
Formatted ...
Formatted ...
Formatted ...
Formatted ...
Formatted ...
Formatted ...
Formatted ...
Formatted: Font: 10.5 pt, Font color: Gray-85%
Formatted ...
Formatted ...
Formatted ...

c. Service and circuitry:
   i. Power to the street lighting system in the City of Anna can come from a variety of utility providers (TXU, CoServ, GCEC, etc.). Regardless of utility provider, the service line must be separated by the primary feed by an electric meter. The City of Anna will make application for service once a permit has been requested, an address assigned, and the meter pedestal has been installed.
   ii. Circuit voltage shall be 240V, to maximize the number of lights per circuit. Designer shall confirm with local utility provider for availability.
   iii. Main line conduit shall be located no closer than three feet behind the median curb. Placement in the center of the median should also be avoided, in the event landscaping and trees are installed.
   iv. Pull boxes shall be located at every change in conduit direction greater than 45 degrees and shall be spaced at even intervals with consideration given to pull distances for specified wire gage. All pull boxes shall be located behind the radius point of median noses. All pull-box lids shall read "CITY OF ANNA LIGHTING."
   v. The meter pedestal may either be stand-alone or mounted to the controller cabinet for the street lighting system. Consult with utility company for height and mounting requirements for the meter socket.
   vi. All service transformers and wiring must be within the pole or underground.
   vii. The control panel and all secondary service connections shall be fully enclosed in a vandal-proof controller cabinet (i.e., no Kindorff racks, where the components are exposed to the elements, will be permitted, in consideration of aesthetics and security). The controller cabinet shall have the following attributes:
      1) Illustrated on the construction drawings by a line diagram, signed and sealed by a licensed professional electrical engineer.
      2) Utilize a relay-switch override.
      3) NEMA 3R enclosure, with drip edge and hinged door with lock. Lock shall match City of Anna standard key pattern.
      4) Mounted on an appropriate reinforced, concrete pad.
      5) If TXU or Oncor is the provider, the enclosure must include a Oncor or TXU-provided trans-socket. The trans-socket must remain intact when installed/integrated into the enclosure.
      6) The controller cabinet must be powder-coated green unless otherwise approved by the director of engineering.

2. Residential street lights. This section applies to all streets identified on the City of Anna Thoroughfare Plan as undivided collectors or local streets. Residential streetlight elements shall become the property of the City of Anna upon final acceptance of the subdivision or project, if they are standard lights following the below criteria. The elements (from the light sources to the disconnect device) include all items necessary to provide such illumination. Residential street lighting shall conform to the following requirements:

   a. Street lights are required at all intersections, in cul-de-sacs, major street curves, and in other locations determined by the director of engineering. Developers shall furnish satisfactory easements for the installation of services to street lights, normally ten feet in width.
   b. Residential lighting shall utilize the "cobra head" style fixture. Homeowners' associations may enter into agreements with the City of Anna to install, maintain, and replace residential street lights that differ aesthetically from what is required in the section.

   c. All residential lighting poles shall have the following attributes (unless approved in writing by the director of engineering):
      i. Height and spacing are based on pavement widths and are prescribed below.
      ii. Single-fixture mounting.
      iii. Capable of withstanding a 100 mph wind, with 30 percent gust factor.
      iv. Mounted on a cast-in-place pole-base, as illustrated in Engineering Standard Detail, SD-P59, using a 10-1/2 inch bolt pattern for the anchor bolts. Mounting bolts shall be a breakaway type bolt.
      v. Hot dipped Galvanized and Powder-coated black, five-inch × five-inch, and tapered (i.e. not straight).
      vi. Square, steel base cover, powder-coated to match the finish of the pole.

Formatted ...
Formatted ...
Formatted ...
Formatted ...
Formatted ...
Formatted ...
Formatted ...
Formatted ...
Formatted ...
Formatted ...
Formatted ...
Formatted ...
Formatted ...
Commented [KB4]: What color should we use?
Formatted ...
Formatted ...
Formatted ...
Formatted ...
Formatted ...
Formatted ...
Formatted ...
Formatted ...
Formatted ...
Formatted ...
Formatted ...
Formatted ...

d. All residential fixtures shall have the following attributes (unless approved in writing by the City Engineer or Public Works Director):
   i. Light emitting diode (LED) lamp intensity is based off pavement width as prescribed below. LEDs shall have a color of 4000K.
   ii. The use of cut-off optics is required to achieve a fully shielded (as defined in articles of this Code) light source. This requirement shall not be modified.
   iii. Forward-throw photometrics should be considered to reduce light pollution onto private lots or property. A photometric plan, signed and sealed by a licensed professional engineer, is required when the street lighting plan is submitted for engineering department review.
   iv. Cobra head installation, the fixture shall be black and be equivalent to on of the following:
      a. Phillips LUMEC RoadFocus Cobra Head Medium (RFM -80W48 LED-4K-G2-R3s-UNV-SRD-RCD7-BK)

e. Service and circuitry:
   i. Power to the street lighting system will come from the electric utility provider for the subdivision. Regardless of utility provider, the service line should come from the nearest electric transformer and be isolated by a disconnect switch or in-line barrel fuse located at the base of the pole (in the hand-hole). Secondary service lines shall be contained within a ten-foot utility easement (UE) illustrated on the plat. All service lines shall be underground. The director of engineering may require that residential street lights be on metered circuit similar to the thoroughfare street lighting.
   ii. Circuit voltage shall be 120/240V. Designer shall confirm with local utility provider for availability.
   iii. A UbiCell UGU photocell is required to be attached to the 7 pin plug on top of the light housing.

3. Developer cost: All street lighting shall be installed at the sole expense of the developer. Developers shall pay a fee to the City of Anna Engineering Department, which is estimated to be equal to the first two years (24 months) power consumption cost. The amount of the fee to be paid shall be determined by the following formula:

$$FA = 24 \times M \times F$$

Where:
FA = Fee amount.
M = Monthly charge per fixture (as determined by the director of engineering).
F = Number of light fixtures.

Street Lighting Requirement Table

Street Type, Paving Width (feet)	Light Source	Nominal Lamp Size (LED) (Watts)	Mounting Height (feet)	Max Spacing (feet)	Minimum Spacing (feet)
<32	LED	100 Equivalent	20	250	125
32 to 43	LED	150 Equivalent	20	250	150
44 Undivided <	LED	150 Equivalent	30	350	150

All developments shall be provided with streetlights. In, general, lights shall be designed and installed based on a submitted photometric plan. Photometric design shall not allow more than a 50% drop off in lumens between light fixtures. At no point shall the spacing of the lights on collector, arterial, and commercial streets, except residential streets, be greater than 200 feet apart.~~should be located at street intersections and at intervals no greater than four hundred (400) feet apart~~.

Streetlights should be the equivalent ~~of~~ to a 175-watt mercury vapor fixtures on minor residential streets. All collector, ~~and~~ arterial, and ~~or~~ commercial streets shall ~~have~~ be equivalent to a minimum of 240 volts, 110-watt, 18,000 ~~sodium~~lumen sodium vapor fixtures

Formatted: Font: (Default) Arial, Font color: Gray-85%, Not Expanded by / Condensed by , Pattern: Clear
Formatted: Font: (Default) Arial, Font color: Gray-85%, Not Expanded by / Condensed by
Formatted: Font: (Default) Arial, Font color: Gray-85%, Not Expanded by / Condensed by , Pattern: Clear
Formatted: Font: (Default) Arial, Font color: Gray-85%, Not Expanded by / Condensed by
Formatted: Font: (Default) Arial, Font color: Gray-85%, Not Expanded by / Condensed by , Pattern: Clear
Formatted: Font: (Default) Arial, Font color: Gray-85%, Not Expanded by / Condensed by
Formatted: Font: (Default) Arial, Font color: Gray-85%, Not Expanded by / Condensed by , Pattern: Clear
Formatted: Font: (Default) Arial, Font color: Gray-85%, Not Expanded by / Condensed by
Formatted: Font: (Default) Arial, Font color: Gray-85%, Not Expanded by / Condensed by , Pattern: Clear
Formatted: Font: (Default) Arial, Font color: Gray-85%, Not Expanded by / Condensed by
Formatted: Font: (Default) Arial, Not Italic, Font color: Gray-85%, Not Expanded by / Condensed by
Formatted: Font: (Default) Arial, Not Italic, Font color: Gray-85%, Not Expanded by / Condensed by
Formatted
Commented [KB5]: Residential will have less lumens
Formatted
Formatted
Formatted
Formatted
Formatted
Formatted
Formatted
Formatted
Formatted
Formatted
Formatted
Formatted
Formatted
Formatted
Formatted
Formatted
Formatted
Formatted
Formatted
Formatted
Formatted
Formatted Table

with a minimum wattage of 250 or 400 watts as directed, in writing, by the City. In some instances, the City may require greater wattage. For all median lights, as-builts must be provided to the City for final acceptance. All light housings shall have a 7 pin shorting cap. All contractors and or developers shall install a ubicell UGU (product of ubiquia) in place of the shorting cap

Street lighting shall be required at each residential subdivision intersection. Street name signs and regulatory signs required at the intersection shall be attached to a street light. Street light and regulatory signage shall be installed in accordance with all TMUTCD requirements. Street lights between street intersections shall be at the projection of a property line between owners.

Commented [KB6]: Look at updating to just LED

Photometric plan shall be included with all civil review sets to ensure that 0.00 lumens trespass pass property and/or right of way boundaries.

~~2.17~~2.14 Barrier Free Ramps

Barrier free ramps shall be provided in all commercial areas and in residential areas which have sidewalks. Ramps shall be located to provide access .in accordance with the standards set by the Americans with Disabilities Act (A.D.A.) at all pedestrian sidewalks and meet all Texas Accessibility Standards (TAS), Public Rights of Way Access Guideliines (PROWAG). Lay down curbs and ramps shall be constructed at all street intersections and driveways whether or not sidewalks are being installed. Lay down curbs and ramps shall be constructed by the developer. The developer/engineer/architect of record shall be responsible for paying for and arranging for all ~~TAS~~ TDLR design reviews and post construction inspections. Results of ~~TAS~~ TDLR inspections shall be provided to the City.

~~2.18~~2.15 Off-Street Parking

All parking areas and spaces shall be designed and constructed in accordance with the following requirements:

A. All parking areas and spaces shall be designed and constructed so as to have free ingress and egress at all times.

B. No parking space or parking area shall be designed so as to require a vehicle to back into a public street or across a public sidewalk, except in the downtown overlay district, as defined by the City.

C. Minimum Dimensions for Off-Street Parking:

1. Ninety-degree parking ('Figures 2.4a and 2.4b) — Each parking space shall not be less than nine (9) feet in width and eighteen (18) feet in length with two (2) feet of overhang between curb and sidewalk or property line (20-foot minimum). Dual head in parking spaces should be a minimum of twenty (20) feet in length; Aisle width shall not be less than twenty-four (24) feet.

2. Sixty-degree angle parking (Figures 2.5a and 2.5b) — Each parking space shall be not less than nine (9) feet wide perpendicular to the parking angle nor less than twenty and one tenth (20.1) feet in length when measured at right angles to the building or parking line. Maneuvering space shall be not less than ~~fourteen and~~twenty ~~one half~~ (~~14½~~20) feet for one-way traffic or twenty-~~two~~ four (~~22~~24) feet for two-way traffic perpendicular to the building or parking line.

3. Forty-five-degree angle parking (Figures 2.6a and 2.6b) — Each parking space shall not be less than nine (9) feet wide perpendicular to the parking angle nor less than nineteen (19) feet in length when measured at right angles to the building or parking line. Maneuvering space shall be not less than twelve (12) feet for one-way traffic or twenty-~~one~~ two (~~21~~22) feet for two-way traffic perpendicular to the building or parking line.

4. Parallel Parking — Each parking space shall not be less than nine (9) feet in width and twenty-two (22) feet in length. Maneuvering space will not be less than twenty (20) feet.

5. Handicap Space Parking — Handicap parking spaces are required to meet ADA~~, and~~ TAS, and PROWAG regulations.

6. When off-street parking facilities are located adjacent to a public alley, the width of said alley may be utilized as a portion of the maneuvering space requirement, provided the alley is paved.

7. When off-street parking facilities are provided' in excess of minimum amounts herein specified, or when off-street parking facilities are provided, but not required by this chapter, said off-street parking facilities shall comply with the minimum requirements for parking and maneuvering space herein specified.

D. Paving Standards:

1. Unless otherwise approved by the City Council or as specified in these standards, all parking lots shall be paved with concrete or asphalt and designed according to City standards and specifications. The parking lanes must be clearly marked by approved paint, buttons or other material. All driveway approaches shall be constructed of concrete in the same strength as the adjacent street and shall be curbed per City standards.

2. The pavement within a designated loading area shall be designed and constructed to carry the additional loading of merchandise, goods, sanitation pick-up, etc., in order to prevent any unnecessary failure in the pavement itself. The pavement design shall be included in the engineering construction plans and specifications and submitted to the City's Engineer for review.

3. Fire lane pavement shall be a minimum of six (6) inches with lime stabilized subgrade. Concrete strength shall be NCTCOG Item 303.3.4.2. Class C (4,000 psi in 28-days). Asphalt firelanes are not permissible, unless approved by the City.

E. All entrances or exits in a parking lot shall be a minimum of thirty (30) feet from the beginning point of any corner radius.

F. All entrances or exits in a parking lot shall be a minimum of twenty-four (24) feet and a maximum of forty-five (45) feet in width, unless One-way, in which case they shall both be a minimum of twelve (12) feet, or as approved by the City Council.

G. The driveway approach angle to any parking area shall be a maximum of sixteen (16) degrees; the departure angles a maximum often (10) degrees; the ramp angles a maximum of eleven (11) degrees; or otherwise shall be approved by the City's Engineer.

H. No parking areas or parking spaces shall be allowed to pave over or utilize public right-of-way, with the exception of approved entrances and exits, unless the City Council approves a site plan provided be the developer.

I. Any lighting used to illuminate any off-street parking area shall be so designed and constructed as to direct the light onto the property and away from any adjoining property or, street. No light shall be allowed to trespass property lines. A photometric plan will be required to show 0 lumens at property lines.

J. All multi-family and commercial parking areas and parking spaces shall be designed and constructed to protect adjacent residences from the direct glare of headlights of vehicles using the parking area.

K. All multi-family, retail, commercial and industrial parking lots shall be required to provide a fire lane with a minimum width of twenty-four (24) feet (requires minimum thirty (30) foot inside curve radius).

L. No City street curb, alley or street pavement may be cut, or cored for drainage, French drains, pool flush outlets, etc without a permit from the City.

Commented [KB7]: We should change this to not allowed period.

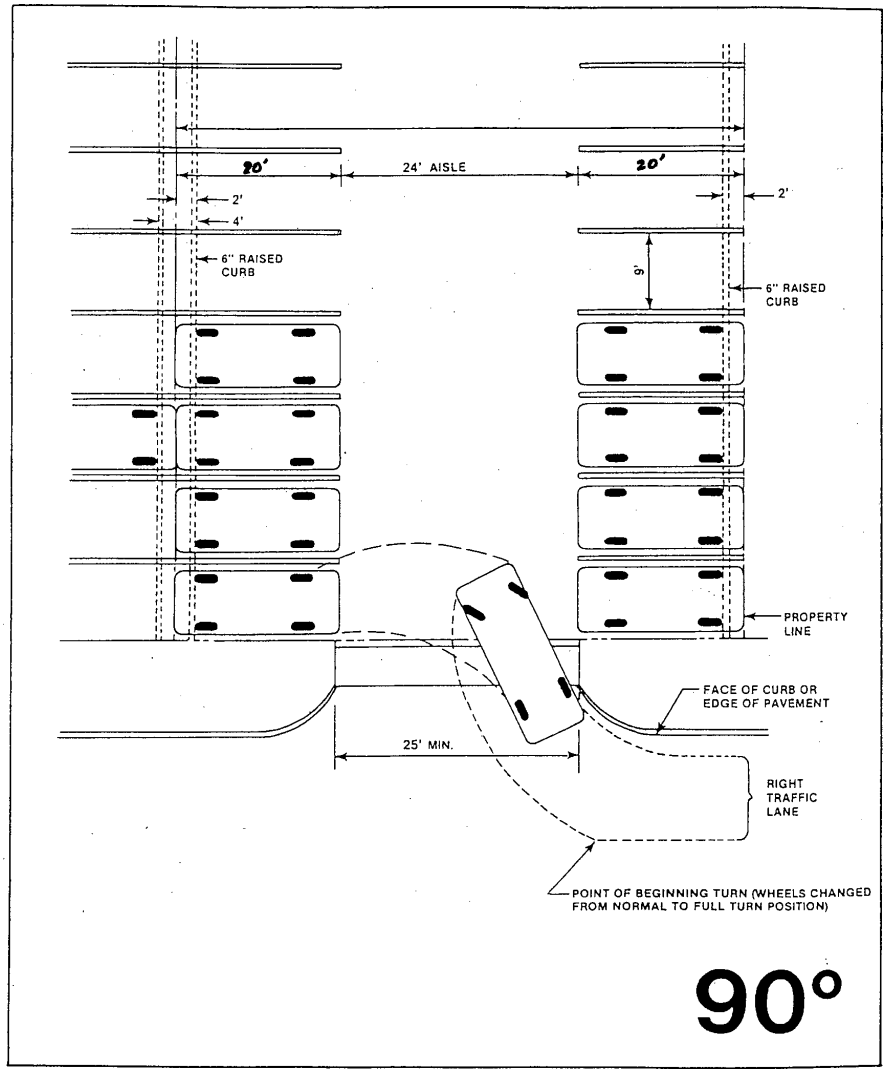

90° Parking – Double Row

FIGURE 2.4a

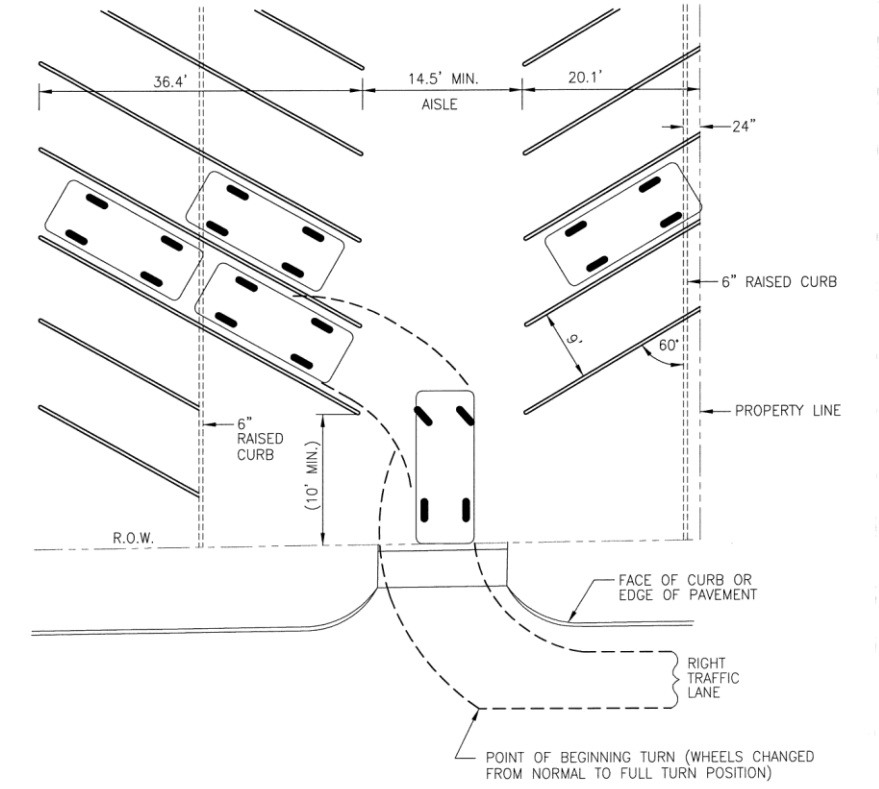

60˚ Parking – Double Row

FIGURE 2.5a

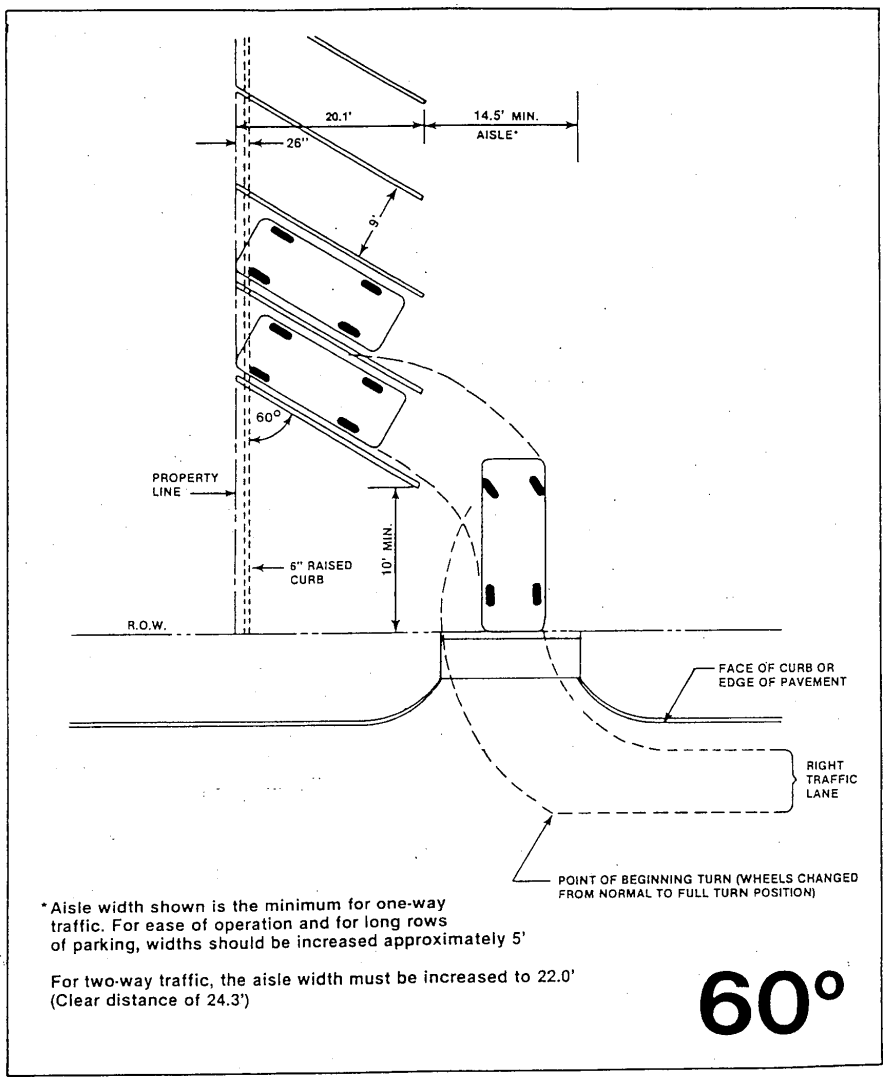

60° Parking – Single Row

FIGURE 2.5b

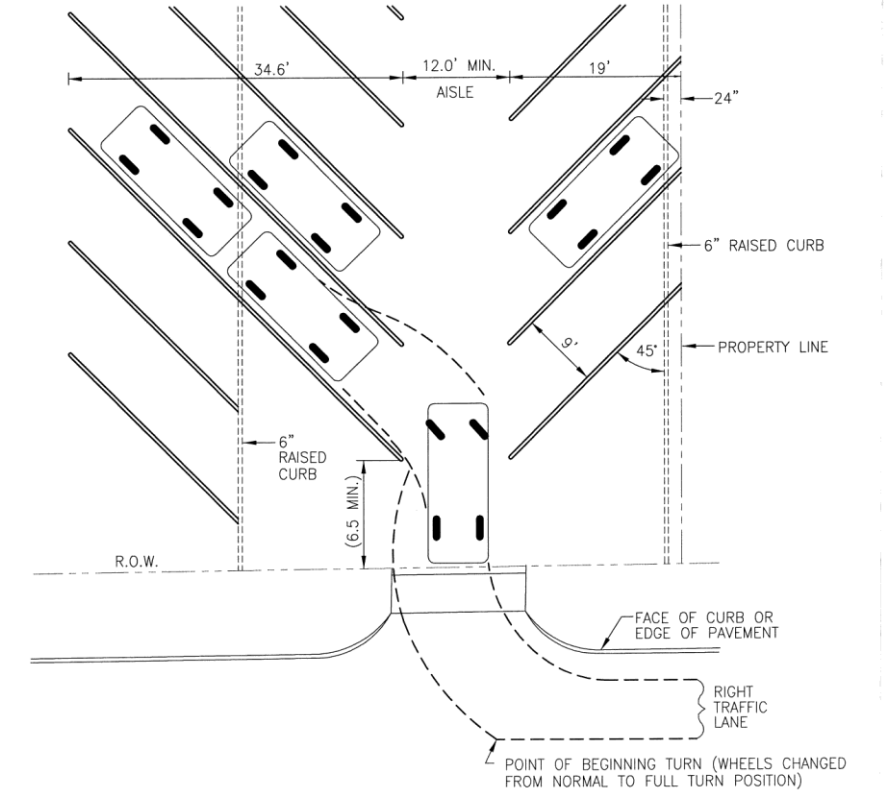

AISLE WIDTH SHOWN IS THE MINIMUM FOR ONE-WAY TRAFFIC. FOR EASE OF OPERATION AND FOR LONG ROWS OF PARKING, WIDTH SHOULD BE INCREASED APPROXIMATELY 5'

FOR TWO-WAY TRAFFIC THE AISLE WIDTH MUST BE INCREASED TO 21' (CLEAR DISTANCE OF 24.2')

45°

45° Parking – Double Row

FIGURE 2.6a

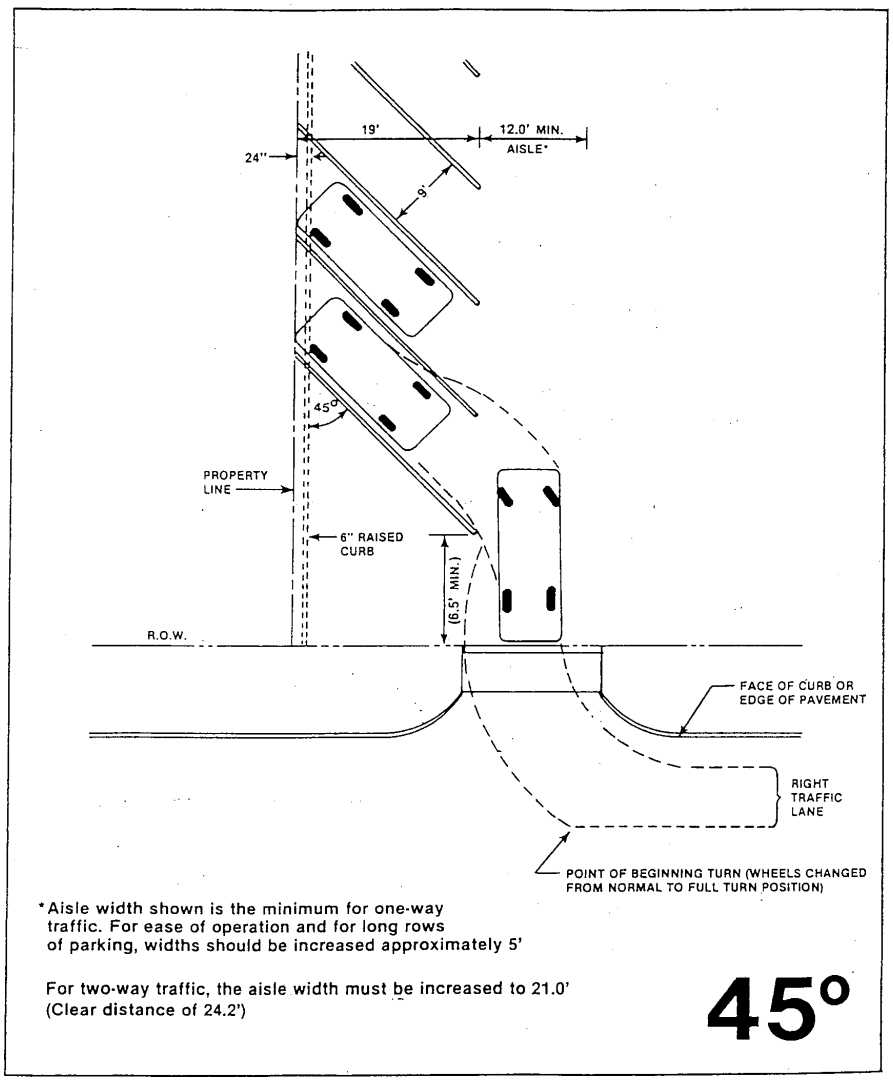

45° Parking – Single Row

FIGURE 2.6b

Section 3 STORM DRAINAGE FACILITIES

3.1 Introduction

Drainage facilities shall be designed and constructed at such locations and of such size and dimensions to adequately serve the development and the contributing drainage area above the development, as well as the affected areas downstream. The developer shall provide all the necessary easements and rights-of way required for drainage structures including storm drains and open channels, lined or unlined. Easement widths for storm drain pipelines shall not be less than fifteen (15) feet, and easement widths for open channels shall be at least fifteen (15) feet wider than the top width of the channel. In all cases, easements shall be of an adequate size to allow proper maintenance.

The design, size, type and location of all storm drainage facilities shall be subject to the review of the City's Engineer and acceptance by the City. The requirements set forth herein are considered minimum requirements. The developer and the developer's engineer shall bear the total responsibility for the adequacy of design. The review by the City's Engineer and/or acceptance of the facilities by the City in no way relieves the developer of this responsibility.

Storm drainage released from the site will be discharged to a natural water course or storm sewer system of an adequate size to convey the 100-year storm runoff expected after development.

Detention ponds shall be designed for the 2-year and 100-year, and ultimate condition storm event.

3.2 Storm Drainage Design Criteria

A. General: The City of Plano's current Storm Drainage Design Manual shall be used for storm drainage calculations. Drainage area calculations, storm pipe calculations, and inlet capacity calculations are required with engineering plan submittals, at a minimum. Additional information may be required by the City.

B. Storm Pipe Size: The minimum size storm sewer line shall be eighteen (18) inches.

C. Storm Pipe Material: RCP shall be used for all stormwater applications, no plastic, PVC, HDPE or ADS pipe ~~wil~~shall~~l~~ be permitted in the fire lane.

D. 100-Year Flood Zones: Where the Federal Emergency Administration (FEMA) has defined a flood hazard area with regard to a drainage course, the flood hazard zone and the floodplain and floodway, if available, shall be shown on the plat and drainage area map. Any development proposed within a floodplain shall complete a flood study to determine that the proposed development meets the City's current floodplain management ordinance and will not be detrimental to any other property.

E. Local 100-Year Flood Zones: ultimate 100-year flood zones shall be determined for non-FEMA creeks or streams (flowing or not) within a subdivision or project limits.

F. Access: Storm drainage facilities shall include all elements of a drainage system consisting of streets, alleys, storm drains, channels, culverts, bridges, swales and any other facility through which or over which storm water flows, all of which the City must have a right in, either in the form of a dedicated right-of-way, floodway/floodplain or drainage easements.

Commented [KB8]: Need to review and make our own

Commented [KB9]: Need 15' access easement outside of floodplain

G. Storm Drainage Management Plan: All new subdivisions shall provide as part of the subdivision review process a complete storm drainage management plan. This plan will include, but not be limited to, the following: a complete review of all on- site, upstream and downstream drainage within the impacted watershed; determine all on-site and downstream drainage facility improvements due to the increased runoff from the proposed development and future upstream and downstream developments; and shall contain calculations necessary to determine compliance with the Standards of Design herein. The plan shall be done, using current zoning conditions or land use prescribed by the City's Land Use Plan (whichever creates the greatest storm water runoff), with maximum development considered throughout the watershed. The storm drainage plan shall show all necessary improvements with flow data provided at each point of interception of water. As part of the storm drainage plan, the developer shall show a lot grading plan to direct all water to proper intersection points avoiding cross flow of water from lot to lot. All upstream discharge shall be intercepted and carried through the proper intersection points avoiding cross flow of water from lot to lot. All upstream discharge shall be intercepted and carried through the proposed development in compliance with the Standards of Design herein. All discharge from the proposed development shall be designed in accordance with the Standards of Design herein with all necessary improvements being installed by the developer to protect downstream property from damage. The determination of necessary improvements to existing drainage facilities downstream of a proposed development shall be reviewed by the City's Engineer for compliance and adequacy. Include recessed curb inlets for all streets that are not residential streets.

H. Storm Water Pollution Prevention Plan: The developer shall provide a Storm Water Pollution Prevention Plan (SWPPP), in compliance with all TCEQ and NPDES regulations, for each project. A copy of the SWPPP and Notice of Intent (NOI) shall be on file at the City prior to the issuance of a building permit.

I. Exemptions: At the City's discretion, alternative storm sewer design criteria and calculations may be considered for special or unique development cases. The alternative design criteria to be considered by the City, on a case-by-case basis, and storm drainage design criteria shall be approved by City Council.

Commented [KB10]: Look at removing this

Section 4 VEGETATION

4.1 General

All seeding, sodding and fertilizer requirements are to be completed in accordance with the North Central Texas Council of Governments (NCTCOG) Standards and Specifications and as modified by the City of Anna, herein.

Block sod may be utilized for erosion control. Block sod shall be growing grass sod of the type specified in the plans. Sod shall have a healthy and dense root system, be stored and maintained in a moist condition from the time of harvest until planted and be free from noxious weeds.

Seed shall be from previous season's crop meeting the Texas Seed Law, including testing and labeling for pure live seed (PLS = Purity x Germination). Furnish seed of designated species, in labeled unopened bags or containers for inspection by the City's Public Works Department. Seed shall be used within 12-months from the date of the season harvested. When Buffalo grass is utilized, use seed that is treated with Potassium Nitrate to overcome dormancy.

4.2 Coverage

The developer shall establish grass and maintain the sodded or seeded area, including watering, until a "Stand of Grass" is obtained. A "Stand of Grass" shall consist of 75% to 80% (for seed) and 100% (for sod) coverage and a minimum of one-inch (1") in height. If a "Stand of Grass" has not been established within four weeks, re-sodding or re-seeding shall be required. Re-grading, Re-sodding and re-seeding ~~will~~shall be required in all washed areas and areas that do not grow.

4.3 Planting Season for Seeding

A. February 1 through May 15 (Permanent Rural Seed Mix)
Green Spangletop – 0.3 LB. PLS/Ac.
Bermuda Grass – 1.2 LB. PLS/Ac.
Sideoats Grama (El Reno) 2.7 LB. PLS/Ac.
Little Bluestem (Native) 2.0 LB. PLS/Ac.
Buffalograss (Texoka) 1.6 LB. PLS/Ac.
Illinois Bundleflower 1.0 LB. PLS/Ac.

B. February 1 through May 15 (Permanent Urban Seed Mix)
Green Spangletop – 0.3 LB. PLS/Ac.
Bermuda Grass – 2.4 LB. PLS/Ac.
Sideoats Grama (El Reno) 3.6 LB. PLS/Ac.
Buffalograss (Texoka) 1.6 LB. PLS/Ac.

C. September 1 through November 30 (Temporary Cool Season Seeding)
Tall Fescue – 4.5 LB./Ac.
Western Wheatgrass – 5.6 LB./Ac.
Wheat 34 LB./Ac.

D. May 1 through August 31 (Temporary Warm Season Seeding)
Foxtail Millet – 34 LB./Ac.

A mix of seed shall be used in overlapping planting seasons.

No Seeding shall occur during the months of December and January. Bermuda grass sod shall be laid during the months of December and January. Developer shall be responsible for establishing a permanent stand of warm season turf.

Section 5 WATER SYSTEM

5.1 General

The design and construction of the water distribution system to serve the development shall be in accordance with good engineering principles, with these Design Standards and with the requirements of the Texas Commission on Environmental Quality (TCEQ). All off-site water mains shall be sized and located to conform to projected demands in accordance with the latest Water Master Plan and the computer model with regard to the impact of each development on the existing and proposed water distribution system. No construction shall commence prior to the approval of the plans and specifications by the City.

All facilities shall be of sufficient size to provide adequate capacity for ultimate development. The pipelines shall be sized to meet the maximum instant domestic requirements plus an appropriate allowance for fire protection water. The design criteria for water demand shall be submitted to the City with the plans and specifications. The City reserves the right to require larger pipelines than required for the proposed development in order to provide capacities for areas outside the development. The developer ~~will~~ shall be responsible to construct water lines adjacent to their property in accordance with the latest Water Master Plan, across the frontage of the tract, or as required by the City. All facilities that are to be public shall be constructed with domestically manufactured materials.

The minimum pipeline size to serve residential areas shall be eight (8) inches in diameter, and the minimum pipeline size serving commercial, business, industrial, etc. shall be twelve (12) inches. In general, all lines shall be looped with no dead-ends. Dead-end lines will be considered on a case by case basis and shall be furnished with an approved automatic flush valve arrangement. The developer shall provide facilities sufficient for fire flows in accordance with the minimum criteria of the State Board of Insurance or the Fire Code adopted by the City.

Commented [KB11]: Do we want to add that they will be PVC up to a certain size and then RCCP after that?

The standard water main sizes shall be used are noted in **Table 5.1.**

Table 5.1 – STANDARD WATER LINE SIZES

8 inch	12 inch	16 inch
20 inch	24 inch	30 inch
36 inch	42 inch	54 inch
60 inch	66 inch	72 inch

Fire flows to be calculated with a minimum of thirty-five pounds per square inch (35 psi) of residual pressure at the fire hydrant with a 35-psi residual in the water distribution system.

The following values shall be used when calculating the average daily water demands, unless project specific water demand and/or actual flow measurements are provided:

Table 5.2 – AVERAGE DAILY WATER DEMANDS

Land Use	Design	Calculation
Residential	• 3.5 persons/unit • 120 gallons per person per day	420 gpd/unit
Apartment	• 2.5 persons/unit • 120 gallons per person per day	300 gpd/unit
Hospital (Beds)	• 720 gallons per day per bed	720 gpd/bed
Nursing Home	• 240 gallons per day per bed	240 gpd/bed
Restaurant	• 18 gallons per person per day	18 gpd/person
Commercial	• 1 person per parking space, or • 1 person per 400 SF of building	50 gpd/person
School	• 30 gallons per student/day	30 gpd/student
Parks	• 6 gallons per person per day	6 gpd/person
Mobile Home Park	• 3 persons per trailer • 110 gallons per person per day	330 gpd/unit

Commented [KB12]: These demands may be outdated due to water conservation

5.2 Connections to Existing Distribution System

Preliminary discussions concerning take-off points in the distribution system should be conducted with the City of Anna Public Works Department prior to finalizing the preliminary designs of the distribution system, which will serve the development. Connections to the City's existing system will be allowed only at locations where the City has determined that sufficient quantity and pressures are available to meet the projected requirements of the development. In general, the connections to the existing distribution system shall be made in such a manner to keep "shut-downs" to a minimum. Preference will be given to a full body tapping sleeve and valve connections.

In a proposed development where City water is not adjacent to the property but is accessible, the developer shall provide, at his expense, an off-site water main of sufficient size to serve his development or as shown on the City's Water Master Plan, whichever is larger. The proposed development will normally require a loop into the existing water distribution system in order to provide adequate water pressure. The loop ~~will~~ shall be at the developer's expense.

In general, the City will not approve a development which cannot be served by extensions to the City distribution system. Some areas in the City may be served by private water companies. In those cases, the Developer shall contact and make proper arrangements with the private water company. The Developer shall always be responsible to construct water facilities that meet City requirements and as shown on the City's Water Master Plan. The City will observe the facilities during construction for compliance with these standards. This in no way relieves or reduces the obligations of the developer to comply fully with these requirements. Under certain circumstances, the City may consider approval of a private

water system, which ~~will~~ shall supply an adequate quantity of potable water for all uses, including residential, commercial and firefighting requirements. Such systems must meet the approval of the City, the TCEQ, the State Board of Insurance, and all other appropriate regulatory agencies. In addition, an agreement between the City and the developer shall be executed whereby the City may acquire the system when it can be connected into the City's owned and operated distribution network. In all cases, the engineering drawings shall show the source of water for the development.

5.3 Location of Facilities

A. Pipelines: Water pipelines shall be located in the parkways between the back of the curb and the street right-of-way. See Standard Drawings for utility locations under pavement. Water lines installed adjacent to a development shall be installed the length of the frontage.

B. Gate Valves: Gate valves shall be located outside the paved streets and shall be two feet (2') from back of curb of the intersecting street. In general, gate valves shall be located at street intersections (except for fire hydrant leads). Maximum spacing of valves on water lines is 1,000'. All valve boxes shall be encased in a concrete pad that shall be twenty-four inches by twenty-four inches by six inches (24" x 24" x 6") and reinforced with No. 3 steel bars at 12" OCEW.

C. Fire Hydrants: In general, fire hydrants shall be located at each street intersection and at intervals on the interior of each block. All fire hydrants shall have isolation valves constructed as described above. No services lines or other connections ~~will~~shall be allowed to the fire hydrant leads.

1. Residential and Duplex: Residential and duplex areas shall have a fire hydrant at each street intersection and at a maximum of five hundred-foot (500') intervals on the interior of each block. In no case, shall there be more than four hundred feet (400') of hose lay from a fire hydrant and fire lane to any main building.

2. Multi-Family: Multi-Family areas shall have a fire hydrant at each street intersection and at a maximum of three hundred-foot (300') intervals on the interior of each block and along fire lanes. In no case, shall there be more than one hundred and fifty feet (150') of hose lay from a fire lane or two hundred and fifty feet (250') from a ROW ~~a~~ fire hydrant to any portion of a building.

3. Commercial, Retail and Industrial: Commercial, retail and industrial areas shall have a fire hydrant at each street intersection and at a maximum of three hundred-foot (300') intervals on the interior of each block and along fire lanes. In no case, shall there be more than one hundred and fifty feet (150') from a fire hydrant and fire lane to any portion of a building in any development.

All fire hydrants, which are placed in off street rights-of-way, shall have a paved concrete access road and proper pavement markings, which have been accepted by the Fire Marshall and City's Engineer.

Commented [KB13]: Explain off street ROW?

All fire hydrants shall be marked in the center of the adjacent street with a Blue Stimsonite (or approved equal) Model 88-SSA Fire Hydrant Marker.

The spacing of fire hydrants shall be measured along the street frontage or fire lanes. The City Fire Marshall and City's Engineer shall review all fire hydrant spacing. When a special

condition exists due to land use, the Fire Marshall or City's Engineer may require additional hydrants for fire protection.

5.4 Water Service Connections

A water service pipeline shall be laid to each lot with fittings and a meter box in accordance with the Standard Drawings. All service pipelines, which supply water to each single-family lot, shall be constructed of SDR-9 (Polytube) having a minimum size of one inch (1").

All water services under pavement shall be encased in a minimum 2" diameter SDR 21 PVC encasement pipe or approved equivalent, with no couplings being installed under the roadway. The ends of the encasement pipe shall be sealed with silicone.

All residential services shall be tapped to the PVC water main using full body bronze double strap brass saddle. Full body~~T~~ tapping tees are required for all services larger than 4-inches.

Meter box tops shall be set one-half inch to one and one-half inch (½" to 1½") above the curb, and an angle meter stop shall be set six inches (6") below the meter box top. Meter boxes shall have a one-inch (1") wide slot from five inches (5") below the top of the box to the bottom of the box on the side facing the lot for service connection. All meter boxes shall be set at least six inches (6") behind the curb, with a "I" etched into the curb adjacent to the meter box.

Commented [KB14]: Possibly update based on details

A. Installation of Meter Boxes: Installation of meter boxes with~~, with~~ reader window within the lid to include an AMI MTU that is compatible with existing city infrastructure, for single-family, multi-family, condominium, and townhouse developments may be installed only at approved locations. Each single-family and duplex residence shall have individual meters taps and boxes (no bull heads are allowed). Condominium, townhouse, or multi-family developments may use alternate installations, approved on a case-by-case basis.

   Service pipeline size for commercial and industrial developments shall be designed by the developer in accordance with the City's adopted Uniform Plumbing Code. The developer must tap the water main with a equal size pipe equivalent to the meter size being installed. No reducers will be allowed for an incorrectly tapped water line for the development to reduce the meter size.

   Greater than 250 water connections shall require a coliform sampling station.

When a development adds connections to the existing city water and sewer network it is required to complete an AMI repeater propagation study to ensure each new smart meter installed by the development will be able to be read by at least 2 repeaters. In the event new AMI repeaters are needed to meet this requirement, the development will be required to determine location and provide new AMI repeaters at the development's sole cost to meet the above requirement. Once installed by the development the city will assist the development to connect it to our existing management system. The development is required to provide this propagation study at the time of civil plans submission.

Formatted: Indent: Left: 0"

5.5 Materials and Installation

A. Before construction of a new water line, contractor shall send a flushing plan for review and approval, plan shall include direction of flow, flush points, sample point locations, start time of flush, duration of flush. At minimum 1 sample location to be provided for each development and additional sample locations per 1000 feet of waterline installed. ~~with sample point locations.~~

B. Pipe: In general, the water pipelines shall be installed with a minimum of ~~four~~ five feet (4~~'~~5') for pipes up to 12" in diameter and six feet (6') for pipes larger than 12" of cover from proposed final grade, unless otherwise approved by the City. The following table summarizes recommended pipe materials for water pipelines:

Table 5.3 – PIPE MATERIALS FOR WATER MAINS

Internal Diameter Pipe Size	Pipe Material
6-inch through 12-inch	PVC, AWWA C900, minimum DR 18

16 inch through 24-inch	PVC, AWWA C900, minimum DR 18 Bar Wrapped Concrete Steel Cylinder, AWWA C303, minimum Class 150
24 inch and larger	Bar Wrapped Concrete Steel Cylinder, AWWA C303, minimum Class 150

C. All water mains under pavement shall be encased as follows:

1. 8-inch through 12-inch – encase in DR 25 PVC or approved equal

2. 12-inch and larger – encase in steel pipe, size and thickness (1/4" min.) to be approved by the City's Engineer.

3. Encasement pipe shall extend 3 feet outside of the pavement.

D. All pipes not under pavement shall be installed in embedment material as shown on the Standard Drawings.

E. All water pipe shall be installed with a "tracer tape" blue in color over the top of the pipe. Locator marker pads shall be installed at 250 feet along water lines.

Commented [KB15]: Do we really need this? Is so tracer tap shall be afixed to top of pipe every 50'

F. All Bar Wrapped Concrete Cylinder will require a Corrosion Protection System (CPS). The CPS must be designed by a NACE certified Professional Engineer with considerable experience in corrosion engineering.

1. A detailed corrosion survey shall be conducted along the alignment to identify potential corrosion problems and recommend a corrosion protection system.

2. Based on the corrosion survey, a CPS shall be designed to include a Galvanic Protection System. The CPS shall be submitted for review and approval by the Director of Engineering. The final anode bed and test station locations need to be shown on the plans and record drawings.

3. Dissimilar metals shall be isolated using insulating kits or other means to prevent galvanic corrosion.

G. Gate Valves: All gate valves shall conform to AWWA C-509 standards with resilient seat only and shall conform to and shall be installed according to the Design Standards and Specifications Manual. All gates valves to be domestic only.

Commented [KB16]: What about butterfly valves

Commented [KB17R16]: 504C

H. Fire Hydrants: All fire hydrants shall be installed with a six-inch (6") gate valve on the hydrant lead and located 3-feet off the back of curb. Fire hydrants, or an approved flush valve arrangement, shall be installed at the end of each dead-end line. Minimum main size for a fire hydrant for residential and non-residential uses shall be eight inches (8").

Fire hydrants shall be three-way breakaway type and conform to AWWA C-502 specifications.

Fire hydrants shall be painted with two coats of TNEMEC Series 530 Omnithane paint or approved equal, and two coats of primer. Bonnet to flange and nozzle caps

of fire hydrants shall painted with two coats of TNEMEC Safety Paint Series 2H "Hi-Build".

Fire hydrant color shall be dependent on the amount of flow. The contractor/developer shall pay for a flow test to be performed by approved flow testing company of City choice.

Hydrants are classified according to AWWA C503 Appendix B as follows:

Class AA: Hydrants that on an individual test usually have a flow capacity of 1,500 gpm or greater.

Class A: Hydrants that on an individual test usually have a flow capacity of 1,000 to 1,499 gpm.

Class B: Hydrants that on an individual test usually have a flow capacity of 500 to 999 gpm.

Class C: Hydrants that on an individual test usually have a flow capacity of less than 500 gpm.

Barrels are to be painted chrome. The tops and outlet-nozzle caps of hydrants are to be painted as follows: light blue for Class AA, green for Class A, orange for Class B, and red for Class C. These colors shall be as designated in Federal Standard 595C.

I. Water Service Connections: Service pipelines shall be in accordance with the designs shown on the Standard Drawings. The materials shall be installed in accordance with the Standard Specifications for Construction. All connections shall be compression type or approved equal.

J. Bends: Joint restraint shall be installed at horizontal change in directions ~~45° or greater~~ and at all vertical change in directions that require a bend. The restraints shall be placed at the bend and at the next pipe joint in each direction from the bend. Follow design details for joint restraints.

K. All irrigation meters shall have a testable double check backflow preventer.

L. All iron fittings shall be covered and secured with plastic wrap prior to backfill being placed.

Commented [KB18]: Should this painted based on the size? Get with Fire

Commented [KB19]: Silver / chrome

Commented [KB20]: Cannot find the colors nor classification of when to use. Get with Fire

Section 6 WASTEWATER SYSTEM

6.1 General

The design and construction of the wastewater collection system to serve the development shall be in accordance with good engineering principles, these Design Standards and the requirements of the Texas Commission on Environmental Quality (TCEQ). No construction shall commence prior to the approval of the plans and specifications by the City of Anna. All sewer mains and lift stations shall be sized and located to conform to the projected flows in accordance with the latest Wastewater Master Plan.

All facilities shall be of sufficient size to provide adequate capacity for the ultimate development. The wastewater lines shall be sized to meet the peak-day dry weather flow plus an appropriate allowance for infiltration of storm water. The minimum wastewater pipeline size (other than service lines) for all developments shall be eight (8) inches in diameter. The design criteria and calculations shall be submitted to the City with the plans and specifications. The City reserves the right to require a pipeline of a larger size than that required by the development in order to provide capacities for areas outside of the development.

The standard wastewater main sizes shall be used are noted in **Table 6.1.**

Table 6.1 – STANDARD WASTEWATER MAIN SIZES

8 inch	10 inch	12 inch
15 inch	18 inch	21 inch
24 inch	27 inch	30 inch
33 inch	36 inch	39 inch
42 inch	48 inch	54 inch
60 inch		

All wastewater lines shall be installed at a depth sufficient to permit all water pipelines to be above the wastewater when the water pipeline has a minimum cover of ~~four~~ five (45) feet. In such cases where waterlines cross or come within nine (9) feet parallel of a wastewater line, follow TCEQ standards/guidelines. ~~pipelines either cross or otherwise come within nine (9) feet of a wastewater pipeline,~~ the wastewater pipe is required to be PVC pressure pipe with a minimum working pressure class of 150 psi~~.~~. Design shall not allow any wastewater to parallel a waterline closer than nine (9) feet.

Commented [KB21]: Do we need to get into every detail on this?

Table 6.2 shall be used to calculate the average daily wastewater flow, unless project specific wastewater demand and/or actual flow measurements are provided. The collection system shall be designed based on the peak flow calculations.

Table 6.2 – WASTEWATER DESIGN FLOW

Land Use	Design	Calculation
Residential	3.5 persons/unit 100 gallons per person per day	350 gpd/unit
Apartment	2.5 persons/unit 100 gallons per person per day	255 gpd/unit
Hospital (Beds)	200 gallons per day per bed	200 gpd/bed
Nursing Home	100 gallons per day per bed	100 gpd/bed
Restaurant	10 gallons per person per day	10 gpd/person
Commercial	1 person per parking space, or 1 person per 400 SF of building	20 gpd/person
School	20 gallons per student/day	20 gpd/student
Parks	5 gallons per person per day	5 gpd/person
Mobile Home Park	3 persons per trailer 60 gallons per person per day	180 gpd/unit

A peaking factor of 4.0 shall be used in design of wastewater mains.

Pipe capacity shall be calculated using Manning's equation. A roughness coefficient of 0.013 shall be used.

6.2 Connections to Existing Wastewater Collection System

Preliminary discussion concerning entrance points in the collection system shall be conducted with the City of Anna Public Works Department prior to finalizing the preliminary designs of the collection system. In a proposed development where City waste water collection facilities are not adjacent to the property but are accessible, the developer shall provide, at his expense, a wastewater interceptor of sufficient size to serve the development and the contributing service area (using fully developed flows).

In general, the City will not approve a development which cannot be served by extensions to the City's wastewater collection system. Lots with a minimum area of 1 acre may be

considered, on a case-by-case basis, for a septic system, and will require City Council approval. Lots with approved septic system shall be designed in the case that the City's wastewater collection system is extended to the lot, the septic system can be readily connected to the City's wastewater collection system.

6.3 Location of Facilities

A. Wastewater Pipelines: Reference the Standard Drawings for location of wastewater pipelines under pavement. No wastewater services can be connected to wastewater mains at depths greater than seventeen feet (17'). If a service connection is required to a line that is greater than seventeen feet (17') deep a parallel main must be installed at a shallower depth, and the service must be connected to the shallower line. Wastewater mains installed adjacent to a development shall be extended the length of the development frontage.

All force mains shall have tracer wires with pits every 200 feet and at every bend. Off site sanitary sewer shall have tracer wire with locator pits being poured into the manhole pad.

B. Wastewater Service Pipelines: Wastewater service pipelines shall be laid to each lot. The service pipelines shall be PVC pipe having a minimum diameter of four (4) inches and shall extend to the adjacent property ~~corner~~line/boundary. Wastewater service pipelines shall be located at the center of each lot and as approved on the final construction plans by the City. In general, a service pipeline shall serve one lot. Special wastewater service sizing will require City ~~Wastewater Superintendent~~ review and approval prior to construction. No sewer line shall be located ~~nearer~~ closer than five (5) feet from any tree or structure, nor any closer than ten (10) feet from any water service or main. Sewer services shall be encased under paved surfaces.

All sewer services shall be connected to the main using a wye connection with a 45-degree bend to complete the connection. No tee connections will be allowed.

The service shall be stubbed ~~out a minimum of ten (10) feet from the~~to the right-of-way line and at a depth no greater than five (5) feet. The stub-out shall be capped with a proper fitting and shall have a single sweep cleanout installed at the right-of-way line and which extends to at least two (2) feet above the finished lot grade. The cleanout stack shall be set to grade during construction of the structure to be served and before a certificate of occupancy will be issued. After the street paving is complete, the letters "II" shall be cut into the concrete curb to locate the service. When private sewer is connected to the stub out a two-way sweep shall be installed at the ROW.

C. Manholes: In general, manholes shall be located at all intersections of wastewater pipelines, changes in grade, changes in alignment and at distances not to exceed five hundred (500) feet. For sewer line flowlines connecting eighteen (18) inches or greater above invert, an internal drop manhole shall be constructed. Five (5) foot diameter manholes are required for internal drop manholes. Manholes shall be designed for loading conditions, and rims be flush with surface, when placed under pavement. Manhole rims located in a landscaped area shall be six (6) inches above grade. Manholes located in floodplains, or areas with increased risk of flooding, shall have bolt down lids and Inflow protector installed. Manhole size shall be per Table 6.3. Construct manholes at both ends of lines that are installed by other than open cut and at each end of aerial crossing lines. When manholes are installed adjacent or within a roadway, the letters "MH" shall be etched into the curb line.

Commented [KB22]: 17' that is nuts. Lets come up with something more reasonable. Like 10' or 12'

Commented [KB23]: Should this reside in Engineering?

Commented [KB24]: Why?

TABLE 6.3 – MINIMUM MANHOLE SIZES

Sanitary Sewer Line Size	Minimum Manhole Diameter
8" and 10"	4.0 feet
12", 15", 18", 21", 24", and 27"	5.0 feet
30" 36", and above	6.0 feet

D. Manholes shall be installed at the ends of all lines.

6.4 Flows in Wastewaters and Their Appurtenances

A. Minimum Grades: Wastewater lines should operate with velocities of flow sufficient to prevent excessive deposits of solid materials, otherwise objectionable clogging may result. The controlling velocity with regard to sediment deposition is near the bottom of the conduit and considerably less than the mean velocity flowing full of 2.5 feet per second (fps). TABLE 6.4 indicates the minimum grades for wastewater pipe with a Manning's "n" = 0.013 and flowing at 2.5 fps.

B. Maximum Velocities: The slope of a wastewater should also be such that excessive velocities will not damage the pipeline. The maximum desirable velocities of wastewaters shall be based upon the pipe manufacturer recommendations not to exceed 10 feet per second (fps).

TABLE 6.4 – MINIMUM GRADES FOR WASTEWATER PIPELINES

Pipe Size (Inches)	Slope in Foot/Foot (n = 0.013)
8	0.0033
10	0.0025
12	0.0023
15	0.0023
18	0.0018
21	0.0015
24	0.0013
27	0.0011
30	0.0009

Commented [KB25]: This appears to be TCEQ mins do we want to be higher than that?

33	0.0008
36	0.0007
39	0.0006
42	0.0006
45	0.0005
48	0.0005
54	0.0004
60	0.0004
66	0.0004
72	0.0003
78	0.0003
84	0.0003
96	0.0002

6.5 Materials and Installation

A. Pipe: Pipe used for wastewater collection systems shall have a minimum earth cover of four (4) feet. For depths of ten (10) feet or greater, the wastewater pipeline shall be a minimum SDR 26.

The following table summarizes recommended pipe materials for wastewater mains:

Table 6.5 – PIPE MATERIALS FOR WASTEWATER MAINS

Internal Diameter Pipe Size	Pipe Material
6-inch through 15-inch	• PVC ASTM 3034 (SDR 35) • For water and wastewater separation deficiencies – PVC ASTM 2241 (SDR 26) or Green PVC AWWA C900 (DR25)
18-inch and Larger	• PVC ASTM F679 (SDR 35) • For water and wastewater separation deficiencies – Green PVC AWWA C900 (DR25)

All pipes shall be installed in embedment material as shown on the Standard Drawings. All pipelines shall be tested.

B. Curved Sewers: No vertical or horizontal curves will be allowed.

C. Manholes: Manholes shall be of pre-cast concrete or cast in place and shall conform to Standard Drawings.

All manholes shall include concrete corrosion protection admixture per approved materials list.

6.6 Testing

All wastewater lines shall be tested for infiltration in accordance with the procedures set forth in the NCTCOG Standard Specifications for Construction. A television survey and air test shall be performed prior to pavement being placed above the line, prior to final acceptance and ~~at the end of the construction period and will~~ again be performed as part of the final testing/maintenance period ~~in at the~~ twenty second (22) month of the maintenance period. The television survey shall include having water introduced into the wastewater line during the survey.

Deficiencies noted shall be promptly corrected by the developer. All manholes will be hydrostatically or vacuum tested. The City's representative shall be present at all testing and copies of the testing reports shall be provided to the City upon completion. All expenses for this work shall be the developer's responsibility.

TV inspections on wastewater mains and lateral connections shall be performed prior to lime placement and after final walk-through. . All testing required for wastewater lines shall be completed prior to lime placement and after final walk-through.

6.7 Wastewater Lift Stations and Force Mains

A. General: The design engineer shall prepare an engineering design report signed and sealed by a licensed Engineer in the State of Texas for approval prior to design plans being submitted for review.

Engineering design report shall include: vicinity map, design flow calculations (using c-value of 120), system curve calculations, pump and system curves, pump cycle time calculations, and hydraulic grade line.

A geotechnical engineering report shall be included with engineering design report with recommendations for lift station foundation, generator foundation, and valve vault designs. Recommendations shall be made to limit potential vertical movement to 1 inch.

Lift station design shall meet the minimum requirements of TCEQ Chapter 217 design criteria for domestic wastewater systems except where exceeded as follows:

B. Pumps: Minimum of two submersible pumps sized to convey the Peak Flow unless otherwise specified. Each pump shall be equipped with a seal failure early warning system. One pump in lift station shall be equipped with a cutter pump. Type 304 stainless steel chains shall be attached to each pump and run full length to top of wet well. Chain shall be sized according to recommended manufacturer specifications. A bypass pump and line shall be installed at grade incase of pump failure or maintenance needs. This bypass pump shall be able to be run off grid power or onsite generator.

C. Power Supply: 3-Phase Electric Utility. Single Phase to 3-Phase converters are not allowed. Provide on-site emergency generator with automatic transfer switch large enough to power pumps necessary during peak flow. There shall be a man handle cutoff installed in the panel. On site generator fuel shall be determined by City.

D. Wet Well: Cast-in-place concrete or pre-cast concrete manhole with concrete corrosion protection admixture per approved materials list, suitable for this environment, or approved equal. Cast-in-place wet well design shall be

Formatted: Font: Arial
Formatted: Font: Arial
Formatted: Font: Arial
Formatted: Font: Arial
Formatted: Font: Arial
Formatted: Right: 0.8", Space Before: 0 pt, Line spacing: single
Formatted: Font: Arial
Formatted: Font: Arial
Commented [KB26]: Seems redundant to the above
Formatted: Font: Arial
Formatted: Font: Arial
Formatted: Font: Arial
Formatted: Font: Arial
Commented [KB27]: Should one pump be able to handle the entire flow or at lease the majority of the flow? Also should they both not be equipped with cutters to prevent clogging?
Formatted: Font: Arial
Formatted: Font: Arial
Formatted: Font: Arial
Formatted: Font: Arial
Formatted: Font: Arial

signed and

Formatted: Font: Arial

sealed by a licensed engineer in the State of Texas. Joints and openings shall be sealed to prevent water Infiltration/exfiltration. Wet well shall be accessed through the tap using aluminum hatches with integral safety grate. All metallic appurtenances located inside the wet well (guide rails, brackets, fasteners, etc.) shall be stainless steel. The lead and lag pump "on" elevations shall be located below invert of the influent line.

There shall only be one influent line connecting to the wet well. All wastewater lines must combine to a single influent line upstream of the lift station wet well.

Guide rails and all hardware shall be Type 304 stainless steel. Mounting hardware shall include lock nuts or lock washers.

Float hanger, all hardware, bolts, nuts, etc. shall be stainless steel.

Wet well shall be vented with minimum four-inch (4") stainless steel pipe. Ell on end of vent shall be screened with stainless steel #8 mesh.

Contractor shall provide odor control for vent pipe capable of handling anticipated loads.

Control floats must be hung away from incoming flow.

Provide level indicating transducer in wet well and connect to City's SCADA system.

Air-Powered Mixer System shall be installed in wet well for grease control. All mounting equipment shall be stainless steel. Reference approved materials list for equipment manufacturer information.

E. Lift Station Piping: Piping in the wet well shall be stainless steel with flanged connections. All bolts shall be 316 stainless steel. Pipe shall be rated to withstand external loadings and internal working pressure and shall meet or exceed minimum TCEQ requirements.

F. Valve Vault: The valve vault shall be cast-in-place or pre-cast concrete. Cast-in-place valve vault design shall be signed and sealed by a licensed engineer in the State of Texas. Valve vault shall be accessed through the top using Flygt or Bilco aluminum hatches. Vault shall be designed to allow for all parts to be removed without interference with the concrete walls. Aluminum ladders with Bilco LadderUp safety post shall be provided. A floor drain with p-trap shall be provided in the floor of the valve vault to drain into the wet well. A flap valve shall be provided on the drain pipe where it enters the wet well. All piping in the valve vault shall be ductile iron. Valve vault piping shall include: flange coupling adapter with thrust harness, plug valve, air release/vacuum valve, and check valve.

Dry well shall be vented with minimum four-inch (4") stainless steel pipe. Ell on end of pipe shall be screened with stainless #8 mesh.

All hardware, bolts, nuts, etc. shall be stainless steel.

G. Check Valves: Provide swing check valve in discharge piping valve vault.

H. Plug Valves: Provide plug valve in discharge piping valve vault. Plug valves internal coating shall be Tnemec Series 431 Permashield PL applied at a thickness of 40 mils DFT or Protecto 401 applied at a thickness of 40 mils DFT.

I. Couplings: Provide coupling in discharge piping valve vault. Coating shall be fusion bonded epoxy powder coating. Thrust harness and thrust rods shall be installed for all CQUplings.

J. Air Release and Vacuum valves: Air release valves of a type suitable for wastewater service shall be installed along the force main where the force main would be prone to trapped air.

The engineer shall determine the valve type and location. The calculations for valve type and valve sizing shall be provided to the City.

Provide air release and vacuum valve in discharge piping valve vault.

All internal parts shall be a non-corroding material such as stainless steel. The valve body shall be constructed 0t stainless steel and equipped with intake and discharge flanges.

K. Electromagnetic Meter: Provide electromagnetic meter in a manhole that is connected to the SCADA system. The sensor shall be rated for NEMA6_IP68 service and shall allow for permanent submergence up to 10 ft of head pressure. Engineer shall ensure adequate upstream and downstream pipe length to ensure accurate flow measurement. Install non-clog submersible sump pump with float switch in flow meter vault.

L. Jib Crane: Provide a freestanding jib crane capable of lifting equipment out of the wet well and valve vault.

M. Control Panel Electrical: Control panel shall be Type 304 stainless steel with hinged door and lockable latch installed minimum 13-foot (3') above ground. A Type 304 stainless steel sub-panel with hinged door and lockable latch shall be installed outside of wet well for motor lead connections. Subpanel to be minimum twelve- inch (12") tall by twelve-inch (12") wide by eight-inch (8") deep and shall be minimum twelve (12") inches above ground elevation. Both shall be watertight and Type 4X.

Commented [KB28]: What?

The control panel shall contain all the electrical components required for complete functionality of the lift station and SCADA system.

All breakers and motor starters shall be Square D brand, all relays shall be pin and socket, control power shall be 120 volts, phase and primary voltage to be determined. Provide shelter over control panel to protect from lightning and weather. Approved shelter manufacturer: Shelter shall be designed to withstand wind loads. Shelter shall be designed by licensed engineer in the state of Texas.

Integrate lift station control with City's SCADA System. Approved SCADA integrator shall be determined by the City of Anna.

N. Automatic Controls:

LS 100 Transducer with Float Backup.

Weighted Floats: On, Off, Lag Pump On, High Water Alarm, Low Level Alarm.

O. Conduit: Schedule 80 PVC electrical conduit shall be used for all wiring. Underground conduit shall be buried minimum 18".

Conduit shall be minimum three-inch (3") I.D.

All conduit ends shall be sealed to prevent gases from entering.

P. Site: Fenced area shall be minimum 30‘ x 30', area shall be accessible from a street or access easement with concrete hammerhead driveway.

Fence shall be 8' solid masonry.

Gate shall be 8‘ high welded steel 16' sliding gate.

The area within the fence shall consist of minimum six-inch (6") compacted flex base with a two-inch (2") crushed stone topping. Stone shall be one-inch (1") nominal in size. Geotextile fabric shall be put down before any stone is put in place.

The access road shall be minimum fifteen feet (15') wide consisting of six-inch (6") reinforced concrete and shall have a concrete drive approach at street connection. Access to be constructed per City of Anna Standard Construction Drawings.

Culverts and or trench drains shall be installed as needed for drainage.

Provide LED site lighting.

Q. Site Selection and Requirements: Site Selection — The following are the minimum criteria that shall be met for a lift station site:

The station should be located as remotely as possible from populated areas. The lift station site shall not be located within 150 feet of an existing or proposed residential dwelling and 100 feet from a residential lot. The station and the access easement shall not be located within the ultimate floodplain nor breach analysis limits.

The station site and its access shall be dedicated to the City fee simple. The fencing setback shall be 20 feet from the easement line to allow for a landscape and drainage buffer.

The station site shall be located so it may serve as much of the entire sewer drainage basin as possible.

Provide a 1-inch potable freeze-proof water service with a 1-inch angle stop and double check valve shall be installed in an appropriately sized meter box.

Provide a fire hydrant at lift station site. Install bollards around fire hydrant.

Lift station piping shall be designed with an additional emergency bypass pump connection, allowing the station to be operated with the primary pump(s) out of service for an extended period.

The force main must be designed to abate any anticipated odor. Reliner by Duran Inc. drop bowl with force line hood shall be installed at force main discharge.

Commented [KB29]: This is covered above and also a better spot for the information. I request we include a bypass pump on site vs just a connection.

R. Force Main Piping: Force main piping to be green in color. Pipe type shall be DR-14 AWWA 0-900 for pipe sizes up to 8".

Force main piping shall be fused HDPE or Ductile Iron Pipe with Protecto 401 lining for force main sizes over 8" with minimum 200 psi pressure rating. Owner shall approve pressure rating of proposed piping prior to installation.

Force main line shall have a tracer wire with a locator pit every 200 feet.

Force main shall be hydrostatically tested to 150 psi for a minimum of four (4) hours to ensure there is less than 1 psi of pressure loss.

Force main pipe shall be designed to meet the working pressure requirements of the particular application. Design calculations and pipe selection shall be submitted to the City for approval prior to installation.

S. Odor Control: Contractor shall provide odor control capable of handling anticipated loads.

T. Acceptance Testing: Both pumps shall be pulled and reinstalled to check for proper alignment of guide rails and access cover

Both pumps shall be run to check for proper rotation and operation and to make sure both are properly seated after reinstallation.

All electrical components shall be tested for proper operation.

Pump supplier shall issue a Certificate of Operation verifying all components have been tested and passed along with performance curves. Two (2) copies of 0&M manuals shall be submitted to the City of Anna.

Provide a minimum two (2) year warranty of all equipment.

Commented [KB30]: My recommendation is HDPE only

Section 7 MISCELLANEOUS REQUIREMENTS

7.1 Grading

All grading shall be completed before the start of utility and paving operations. A sheep-foot roller shall be utilized for compaction of all fill material. There shall be no material larger than six (6) inches used in the trench.

7.2 Grading Permit

A grading permit (Exhibit 7.1) shall be obtained prior to stockpiling or filling property within the City limits. Care shall be taken to avoid filling in drainage swales, creeks, wetlands, etc. Erosion protection shall be installed around stockpiled or stored material until grass is established. If fill is placed for use other than stockpiling or storage, a grading plan shall be prepared by a Professional Engineer registered in the State of Texas and submitted with the grading permit. Densities shall be taken, and proper compaction techniques used when placing the fill. In all cases a Professional Engineer registered in the State of Texas shall certify that the proposed fill location is not within a stream or creek (flowing or not) flood plain. If the City's Engineer determines the fill is to be placed near a creek or stream or possible drainage way, the 100-year floodplain shall be staked by a registered surveyor.

7.3 Private Utility Construction

A. Trench Backfill — City Right-of-Way

1. No concrete streets shall be open cut by utility companies without City approval, by permit. Utilities crossing concrete streets shall be tunneled or bored. Tunneling or boring methods shall be approved by the City prior to installation.

2. Asphalt streets may be open cut, by permit. Backfill above utilities shall be concrete stabilized sand or cement. The asphalt pavement shall be repaired per City detail.

Commented [KB31]: Need to discuss, recommend trenchless method, directional drilling, missle, etc.

3. All trench backfill is to be mechanically compacted to 95% Standard Proctor Density within City rights-of-way. The compaction may be obtained by mechanical tamping, rolling, etc. No water jetting is allowed. In the parkway, the backfill material may be from the excavated trench, except no rocks larger than six inches (6") shall be used. Material from rock or shale excavation shall not be used. The contractor for the utility company or the utility company shall furnish density reports from a materials testing company verifying the densities. Densities shall be taken at each twelve-inch (12") lift at a maximum spacing of 300 feet.

B. Parkway Cleanup:

The contractor for the utility company or utility company shall remove any rocks, topsoil, or excess trench material from the parkway and replace any disturbed areas with grass sod.

CITY OF ANNA
FILL MATERIAL REQUEST FORM

The following property owner has requested to place fill material at the below noted property location(s). All fill material placed is to be relatively clean and free from debris. The City of Anna is not responsible for any placement, distribution, removal or testing of material that is placed at the below noted location. The City may require that fill material be removed from the site, if discovered that non-suitable material has been placed.

Any fill material placed or dispersed at the designated site shall be graded and compacted so as to not significantly affect or impede any existing drainage flow nor is it to be placed in any area designated as flood plain. An engineered grading plan shall be submitted to the City for review, if deemed necessary by the City Engineer. Methods of placement and compaction of fill material shall comply with City of Anna specifications. Laboratory testing may be required at the discretion of the City Engineer. Placement of material can only occur after a site review has been conducted by a City of Anna Engineering Department representative and approval to place fill has been granted by the City Engineer. Signature of all below noted parties are to be in place prior to fill material placement.

Proper erosion control devices may be required at the discretion of the City of Anna. If required silt fencing and other erosion control devices are to be installed and inspected by the City prior to any fill material placement.

Areas or Locations of Fill Material Placement:

_____

_____

Signature of Property Owner(s): Phone: _____

_____

_____

Name of Project Where Material Originated:

_____

Name of Contact/Representative: Phone: _____

_____

Signature of Project Contractor/Representative:

_____

Signature of City of Anna Representative:

_____

City Engineer Comments:

_____

_____

(SEE BACK FOR INSTRUCTIONS)

EXHIBIT 7.1

INSTRUCTIONS FOR
CITY OF ANNA FILL REQUEST

I. Permanent Placement

A. Grading Plan prepared by Professional Engineer registered in the State of Texas. Grading plan should have proposed and existing topography, including creeks, draws, floodplains and existing tree locations.

B. Limits of fill to be staked in the field.

C. Erosion control shall be in the form of an approved SW3P.

D. No fill in drainage ways, floodplains, or wetlands.

E. No trees to be removed without approval of City Planning Department.

F. Maximum slope is 3:1.

G. Grass to be established within 21 days of placement.

H. Compaction to be 95% density using a sheep foot roller in 8" to 12" lifts.

I. Density to be verified by certified materials testing lab.

2. Temporary Stockpiling

A. A stockpile location map shall be prepared by engineer showing stockpile location, existing topography, including existing creeks, draws, floodplains, and tree locations.

B. Items 1-B through 1-G shall apply.

C. Material may not be spread without City approval.

D. If stockpile material is decided to be used as permanent fill material, it shall be re-spread and placed per 1-H and 1-I.

3. Signatures

A. Property owner must sign permit.

B. All Contractors furnishing material to the site shall sign the Fill Material Permit and have a copy at the receiving site or on each truck.

C. Contractors without a signed permit shall be turned away from the site.

4. Miscellaneous

A. Violations of this permit can result in citations for owner and dirt generator with fines up to $2,000.00 per violation.

B. City will inspect dirt placement.

C. All fill material placed is to be relatively clean and free form debris.

CAT MIS102 Fill Request
CAT/em

EXHIBIT 7.1 Cont'd.

7.4 Additional Permits or Approvals

Developer or developer's representative is responsible for obtaining any other approvals or permits needed for their development, for example: TCEQ, FEMA, etc. prior to start of construction. Permitting from TxDOT must be through the City. The developer shall be responsible to prepare all necessary studies and documents required to complete this process. Copies of the permits/approvals shall be furnished to the City.

7.5 Retaining Walls

A. Retaining walls or concrete slope protection shall be installed where lot slope is greater than 3:1.

B. No railroad tie retaining walls shall be constructed.

C. All retaining walls shall be stone, masonry or reinforced concrete.

D. Retaining walls four feet (4') and higher shall be designed and inspected by a Professional Engineer registered in the State of Texas, and an engineering report furnished to the City at civil plan review.

~~E. Gabion retaining walls may be used only with City's Engineer's approval for walls less than four feet (4') along drainage ways.~~

Commented [KB32]: Will not allow Gabion retaining walls no matter the height.

Section 8. A STANDARD SPECIFICATIONS (see Section 8.B. for modifications to these specifications).

MATERIALS AND CONSTRUCTION METHODS

STANDARDS:

All work shall be performed in accordance with the Standard Specifications for Public Works Construction - North Central Texas, 5th Edition, dated 2017, except where noted otherwise in the City of Anna's supplemental "Special Provisions", the Special Conditions, and the Special Specifications included herein.

Section 8. B MODIFICATIONS TO STANDARD SPECIFICATIONS

CITY OF ANNA, TEXAS

SPECIAL PROVISIONS TO THE NORTH CENTRAL TEXAS STANDARD SPECIFICATIONS

FOR PUBLIC WORKS CONSTRUCTION

MATERIALS AND CONSTRUCTION METHODS

The North Central Texas Standard Specifications, 5th Edition dated November 2017, as referenced or set forth in Section 8.A. shall be modified and clarified by the addition of the following requirements to the various items. Except when specifically stated, none of the requirements shall be deleted.

DIVISION 200 – SITE PROTECTION AND PREPARATION

ITEM 204.7 MULCHING

Slope and drainage channel seeding shall be in conformance with Item 204.7. Hydromulch Seeding mixture and rate shall be as required under Item 204.6.

ITEM 204.2 TOPSOIL

204.2.3. Construction Methods

Add the following: A minimum of four (4) inches of topsoil shall be provided on all major thoroughfare medians and rights-of-way and on all earthen channel slopes. This will be material imported from off site. The City will approve material prior to placement.

ITEM 204.6 SEEDING TURF-GRASS

Delete the mixture, rate, and planting dates and substitute:

- Type I: Unhulled Perennial Bermuda: Reserve and Spangle Top Grass Seeds (September – March)
- Type II: Perennial Bermuda Grass – Unhulled: (April – August)

A mix of seed shall be used in overlapping seasons.

204.6.4 Construction Methods

Add as follows: All seeding operations shall be performed by either "Drilling" or "Cultipacker" process or approved equivalent. Seed shall be covered by + ¼" Topsoil.

204.6.4.1 General

Add the following: The Contractor shall maintain the seeded areas including watering until a "Stand of Grass" is obtained. A "Stand of Grass" shall consist of **80%** coverage, a minimum of one (1) inch in height. Re-seeding will be required in washed areas.

ITEM 203.1 GENERAL SITE PREPARATION

203.1.2 Construction Methods

Add the following: Unless otherwise approved in writing by the City of Anna, where excavation to grade established in the field by the Owner terminates in loose or solid rock, the Contractor shall excavate 6-inches below the required subgrade elevations for the entire roadbed width and shall backfill with suitable selected materials as indicated on the plans. Suitable selected material shall include lime treated subgrade or a base material having a plasticity, index not greater than 12. Payment for such work will be made under the items of unclassified street excavation, lime treated subgrade and hydrated lime. The 6-inch lime treated subgrade or base shall be compacted to 95% density.

ITEM 203.5 EMBANKMENT

203.5.2 Construction Methods

Add the following paragraph: Excavated material from the channel which is used as embankment to complete the established alignment, grade and cross-section of the channel shall be compacted to 95% density.

203.5.3 Density

Add: Embankment in the City of Anna shall be compacted to not less than 95% of the maximum density.

DIVISION 300 – ROADWAY CONSTRUCTION

ITEM 301 SUBGRADE, SUB-BASE & BASE PREPARATION

301.1 General

Construction Methods:

Add the following: Prior to final compaction of subgrade, samples of the subgrade material shall be collected by a testing laboratory approved by the City, and laboratory tests made to determine the amount of lime required.

The application rate for hydrated lime shall be selected to obtain at least the optimum lime percentage indicated by test method ASTM C977-83a, Appendix XI; however, not less than 27 lbs. per S.Y. shall be applied. A Geotechnical Engineer's report reflecting the recommended application rate and including supporting test data shall be submitted in writing to the City, for approval prior to beginning any lime treatment. Laboratory test may be waived provided a minimum of 36 lbs. per S.Y. is applied.

ITEM 301.2 LIME TREATMENT

Add the following: The lime treated subgrade shall be moist cured until covered by other base or pavement up to fourteen (14) days after final compaction. After 14 days without covering an application of 0.10 to 0.20 gallons per square yard emulsified asphalt shall be applied at the Contractor's expense. Reapplication of emulsified asphalt may be required if lime treated subgrade is not covered shortly after first application. Lime treated subgrade may be covered by other base or Pavement when density of 95% of maximum at optimum moisture content is obtained.

301.2.1.2 Quicklime (dry) shall not be used in the construction of roadway work in the City.

ITEM 301.3 PORTLAND CEMENT TREATMENT

Add the following: Portland cement modification of subgrade soils is not permitted unless approved by the City of Anna Public Works director. Subgrade soils means natural ground or embankment encountered in the construction.

ITEM 301.5 FLEXIBLE SUB-BASE OR BASE (CRUSHED STONE / CONCRETE)

General:

Add the sentence: No local limestone material shall be used as flexible base (crushed limestone) on Anna paving projects, unless. otherwise shown on the plans.

ITEM 302 ASPHALT PAVEMENT

ITEM 302.2 AGGREGATES FOR HOT-MIX ASPHALT PAVEMENT

Commented [KB33]: What the hell this section is for Concrete

Central Mixing Plant

Add the following: When a fly ash admixture is used with Type I cement in the production of Portland cement concrete, separate silos shall be provided for fly ash and cement and provisions shall be made for individual measurements.

Finishing

Add the following: The finished concrete pavement construction under these specifications is expected to meet certain quality standards for surface of the concrete including the durability, texture, riding surface and appearance. The surface must be durable, firm, dense and well bonded to the aggregate to maintain an appearance and texture which is satisfactory to the Owner. Concrete pavement having a poor surface which has spalled (exposed aggregate) due to poor quality paste, high water-cement ratio, over-vibration, improper curing, extreme weather or any other reason, or does not have a satisfactory riding surface shall be removed and replaced at the Contractor's expense. It is extremely important that the Pavement have a good rideable surface, free from undulations and rough joints. The City Engineer shall determine the acceptability of the Pavement.

- Machine Finishing

  Machine finishing of pavement shall include the use of power-driven spreaders, reciprocating type power-driven vibrators, power-driven transverse strike-off, and screed.

  The concrete pavement shall be consolidated by a reciprocating type mechanical vibrator. As soon as the concrete has been spread between the forms, the mechanical vibrator shall be operated to consolidate the concrete and remove all voids. Hand manipulated vibrators shall be used for areas not covered by the mechanical vibratory unit.

The transverse finishing machine shall first be operated to compact and finish the pavement to the required section and grade, without surface voids. The machine shall be operated over each area as many times and at such intervals as directed. At least two trips will be required and the last trip over a given area shall be a continuous run of not less than 40 feet. After completion of finishing with the transverse finishing machine a transverse drag float may be used.

After the floating has been completed and the excess water removed, but while the concrete is still plastic, the surface of the concrete shall be tested for trueness with an approved 10-foot steel straightedge furnished by the Contractor. The straightedge shall be operated from the side of the pavement, placed parallel to the pavement centerline and passed across the slab to reveal any high spots or depressions. The straightedge shall be advanced along the pavement in successive stages of not more than one-half its length. Practically perfect contact of the straightedge with surface will be required, and the pavement shall be leveled to this condition, in order to insure conformity with the surface test required below after the pavement has fully hardened and to insure a smooth rideable surface. Any correction of the surface required shall be accomplished by adding concrete if required and by operating the longitudinal float over the area. The surface test with the straightedge shall then be repeated.

After completion of the straightedge testing and surface correction the surface of the pavement shall be finished by an approved method. Methods available for pavement surface finish including a burlap drag finish, a broom finish or a belt finish. Unless otherwise shown on the plans, the pavement surface shall be finished with the burlap drag.

a. Burlap Drag Finish

   If the surface texture is to be a drag finish, a drag shall be used; it shall consist of a seamless strip of damp burlap or cotton fabric, and it shall produce a uniform surface of gritty texture after dragging it longitudinally along the full width of pavement. For pavement 16 feet or more in width, the drag shall be mounted on a bridge which travels on the forms. The diameter of the drag shall be such that a strip of burlap or fabric at least 3 feet wide is in contact with the full width of pavement surface while the drag is used. The drag shall consist of not less than two layers of burlap with the bottom layer approximately 6 inches wider than the upper layer. The drag shall be maintained in such a condition that the resultant surface is of uniform appearance and reasonably free from gravels over 1/16-inch in depth. Drags shall be maintained clean and free from encrusted mortar. Drags that cannot be cleaned shall be discarded and new drags substituted.

b. Broom Finish

   If the surface texture is to be broom finished, it shall be applied when the water sheen has practically disappeared. The broom shall be drawn from the center to the edge of the pavement with adjacent strokes slightly overlapping. The

broom operation shall be so executed that the corrugation. produced in the surface shall be uniform in appearance and not more than 1/16-inch in depth. Brooming shall be completed before the concrete is in such condition that the surface will be torn or unduly roughened by the operation. The surface thus finished shall be free from rough and porous areas, irregularities, and depressions resulting from improper handling of the broom. Brooms shall be of the quality, size, and construction and shall be operated to produce a surface finish meeting the approval of the Owner. Subject to the approval of the Owner, the Contractor may be permitted to substitute mechanical brooming in lieu of the manual brooming as herein described.

c. Belt Finish

If the surface texture is to be belt finish, when straightedging is completed and after sheen has practically disappeared and just before the concrete becomes non-plastic, the surface shall be belted with a 2-ply canvas belt not less than 8 inches wide and at least 3 feet longer than the pavement width. Hand belts shall have suitable handles to permit controlled, uniform manipulation. The belt shall be operated with short strokes transverse to the centerline and with a rapid advance parallel to the centerline.

- Hand Finishing

Hand finishing of concrete pavement will be' permitted in areas where it is not practical or possible to construct with finishing machines. These areas include, but are not limited to, intersections, left turn, lanes, crossovers, transition areas and where the pavement width is not uniform. In all hand finished areas, one-half (½) extra sack of cement per cubic yard of concrete shall be used in the mix. In hand finished areas, the concrete shall be struck off with an approved strike-off screed to such elevation that when consolidated and finished the surface of the pavement shall conform to the required section and grade. The strike template shall be moved forward with a combined transverse and longitudinal motion in the direction the work is progressing, maintaining a slight excess of material in front of the cutting edge. The concrete shall then be tamped with an approved tamping template to compact the concrete thoroughly and eliminate surface voids and the surface screeded to required section. After completion of a strike-off, consolidation and transverse screeding, a hand-operated longitudinal float shall be operated to test and level the surface to the required grade.

Workmen shall operate the float from approved bridges riding on the forms and spanning the pavement. The longitudinal float shall be held in contact with the surface and parallel to the centerline and operated with short longitudinal strokes while being passed from one side of the pavement to the other. If contact with the pavement is not made at all points, additional concrete shall be placed, if required, and screeded, and the float shall be used to produce a satisfactory

surface. Care shall be exercised to keep the ends of the float from digging into the surface of the pavement. After a section has been smoothed so that the float maintains contact with the surface at all points in being passed from one side to the other, the bridges may be moved forward half the length of the float and the operation repeated. Other operations and surfaces tests shall be as required for machine finishing.

- Edging at Forms and Joints

  After the final finish, but before the concrete has taken its initial set, the edges of the pavement along each side of each slab, and on each side of transverse expansion joints, formed joints, transverse construction joints, and emergency construction joints shall be worked with an approved tool and rounded to the radius required by the plans. A well-defined and continuous radius shall be produced, and a smooth, dense mortar finish obtained. The surface of the slab shall not be unduly disturbed by tilting of the tool during use.

  At all joints, any tool marks appearing on the slap adjacent to the joints shall be eliminated by brooming the surface. In doing this, the rounding of the edge shall not be disturbed. All concrete on top of the joint filler shall be completely removed.

  All joint shall be tested with a straightedge before the concrete has set, and correction shall be made if one side of the joint is higher than the other or if they are higher or lower than the adjacent slabs.

  Construction joints shall be sawed between 6-24hrs from original placement of concrete to minimize uncontrolled cracking. Horizontal construction joints shall be installed to follow the future pavements widths and shall be along the lane line. If construction joints are cut in narrower than future lane lines the contractor will be required to remove sections and repour.

ITEM 303 PORTLAND CEMENT CONCRETE PAVEMENT

ITEM 303.8 PAVEMENT TESTING AND EVALUATION

303.8.2 Pavement Thickness Test

Delete in its entirety and substitute therefore the following:

Upon completion of the work and before final acceptance and final payment shall be made, pavement thickness tests shall be made by the Contractor. Tests shall be made at 400-foot spacings along the length of the pavement. In the event a deficiency in the thickness of pavement is revealed, two (2) subsequent sets necessary to isolate the deficiency shall be made - one at a jointed section prior to the deficient station and one at a jointed section following the deficient station. Additional tests shall be obtained as necessary, at jointed section intervals to isolate the deficient area. Removal and replacement of concrete shall extend to joint boundaries, the full width of pavement section. If the average thickness of pavement in a particular section is less than called for on the plans, the pavement section shall be removed and replaced with the correct thickness, extending to joint boundaries, the full width of the pavement section, at the Contractor's entire expense. No additional payment over the contract unit price shall be made for any

pavement of a thickness exceeding that required on the plans.

303.8.3 Pavement Strength Test

Revise the first paragraph to read: During the progress of the work, the Inspector or a commercial laboratory shall cast test cylinders or beams to maintain a check on the strengths of the concrete being placed.

Add to the 5th paragraph: Test cores shall be obtained within five (5) working days after the 28-day test results have been provided by the commercial laboratory. All test cores shall be obtained by a commercial laboratory, at the Contractors expense. One (1) core shall be obtained in the immediate area of the deficiency and two (2) additional cores shall be obtained - one at a jointed section prior to the deficient station and one at a jointed section following the deficient station. Additional cores shall be obtained as necessary, at jointed section intervals to isolate the deficient area. Removal and replacement of concrete shall extend to joint boundaries, the full width of pavement section.

Amend the 2nd paragraph on Page 303-25 to read “Pavement not meeting the minimum specified 28-day strength after cores have been tested shall be removed and replaced at the Contractor’s expense.”

ITEM 305 MISCELLANEOUS ROADWAY CONSTRUCTION

ITEM 305.1 CONCRETE CURB AND GUTTER

305.1.3.2 Reinforcing Steel

All bars at splices shall be lapped a minimum of 30 diameters of the bar or 12-inches, whichever is greater.

ITEM 305.2 CONCRETE SIDEWALKS, DRIVEWAY APPROACHES, & BARRIER FREE RAMPS

305.2.2.2 Reinforcement

Revise the first sentence to read: Driveway approaches and walk reinforcing shall be No. 3 bars on 18-inch centers.

305.2.3 Construction Methods

General:

Add to end of first paragraph: The drive approach shall have a minimum thickness equal to the thickness of the adjacent street or 6 inches, whichever is greater.

305.2.3.7 Joints

Revise second sentence to read: Expansion joints shall be placed in the sidewalk at 40-foot intervals or as otherwise specified by the Owner.

DIVISION 500 – UNDERGROUND CONSTRUCTION & APPURTENANCES

ITEM 501 UNDERGROUND CONDUIT MATERIALS

ITEM 501.4 CONCRETE PRESSURE PIPE AND FITTINGS

C302 Reinforced Concrete Pressure Pipe, Non Cylinder Type, for Water and Other Liquids, and C300 Reinforced Concrete Pressure Pipe, Steel Cylinder Type, for Water and Other Liquids are not approved for use in the City, unless otherwise shown in the plans or approved in writing. Reinforced concrete cylinder pipe in sizes 16 inches through 21 inches shall be Pretensioned Pipe Type C303. For pipe 42 inches in diameter and above the pipe shall be Prestressed Pipe Type C301. Between 24 inches and 36 inches the pipe furnished may be either type. All pipe shall be designed to withstand the working pressure and external load as shown in the plans.

ITEM 501.5 REINFORCED CONCRETE WASTEWATER PIPE WITH RUBBER GASKET JOINTS

ASTM Designation C76 and shall be of the Thick Wall Pipe design with aggregates consisting of limestone aggregate in the proportion of at least 75 percent by weight of the total aggregates, unless otherwise provided in the Special Conditions to the Specifications.

ITEM 501.7 DUCTILE-IRON PRESSURE PIPE AND FITTINGS

Add the Following: Minimum design thickness for all Ductile-Iron Pipe installed shall be Class 50 on sizes 12 inches and smaller, and Class 51 on sizes 14 inches and larger.

ITEM 501.9 STEEL PIPE AND FITTINGS

501.9.2 Applicable Standard Specifications

Add the following: Contractor shall, submit a written certification that the pipe has been manufactured and tested in accordance with the applicable standards.

The pipe shall be manufactured, fabricated, coated and lined by a single manufacture being a certified member in good standing of the Steel Plate Fabricators Association (SPFA).

501.9.3 Pipe and Fitting Requirements

Substitute the following for the sentence following (2) Wall Thickness: All steel pipe to be furnished for this project shall be designed in accordance with AWWA Ml 1 for the most critical application of internal pressures and external loads. The following design conditions shall apply:

Internal Pressure (Design to account for working and surge together)

1. Working Pressure of 200 psi
2. Surge allowance of 250 psi

External Loading for Buried Pipe

1. External loads shall be comprised of the weight of the backfill together with live and' impact loads. Earth loads shall be calculated based on ditch and positive projecting conduit. The earth load for the pipe design shall be the greater of the above two conditions.
2. External live loads shall be at least equivalent to AASHTO HS-20 loading.
3. Modulus of soil reaction (E') < 1000 psi
4. Unit weight of fill (w)> 120 pcf
5. Deflection lag factor (Dl) (1.0)
6. Bedding constant (K) = 0.100
7. hw = h = depth of cover above top of pipe
8. Maximum deflection in percent of pipe diameter 'shall be ad determined by AWWA Ml 1, latest edition, as calculated using moment of inertia of steel cross section of pipe wall. Moment of inertia of cement mortar shall not be included in calculation of maximum deflection.

Available Deflections

Mortar-lined and coated = 2 percent of pipe diameter

Maximum Working Stress

The maximum combined stress based on working pressure shall be no greater than 50 percent of the minimum yield strength or 18,000 psi, whichever is less.

The maximum combined stress based on test pressure shall be no greater than 75 percent of the minimum yield strength or 24,000 psi, whichever is less.

501.9.4 Joints:

Add the following: In general, pipe joints shall be as follows, as indicated on the Drawings or as specified.

A. Flanged joints shall be provided as a minimum at all flanged valves, meters and other equipment.

1. Flanges: Unless otherwise noted, flanges shall conform to the requirements of AWWA C207, Table D, E or F as required.

2. Flange Bolts and Nuts: Shall be furnished in size and numbers stipulated in AWWA C207. Unless otherwise indicated, bolts shall be carbon steel to meet the requirements of ASTM Designation A307, Grade B for regular joints.

B. Restrained Lap-Welded slip joints (expanded bell) with a single fillet weld.

C. Carnegie-Shape Rubber Gasket Joint: Bell and spigot rubber gasket joint will be furnished with the bell end of the pipe mechanically expanded to the required internal diameter and the spigot end furnished as a sized Carnegie shape welded to the opposite end of the pipe. The expanded bell and Carnegie spigot shall be designed such that when the pipe is laid and jointed, it will be self-centered, and the 0-ring rubber gasket will be enclosed tightly on all four sides and confined under compression adequate to ensure watertightness.

   Gaskets to be full-face for use with flat face flanges and ring type for use with raised face flanges. Gasket material for water service pipe shall be cloth inserted rubber sheet, 1/8-inch thick or red rubber, ASTM D1330, Grade 1. Gasket material for air piping shall be as above, but of EPDM.

D. Mechanical Couplings: Mechanical couplings designed to provide a stress relieving flexible joint shall consist of a cylindrical sleeve, two gaskets, two follower rings and a set of bolts and nuts.

   1. Sleeves: Manufactured of ASTM A53 steel, for sizes 10-inches and smaller. ASTM A36 steel for sizes 12-inches and larger. Minimum sleeve length shall be five inches for pipe 12-inches and smaller, 7-inches for pipe 14-inches through 24-inches, and 10-inches for pipe larger than 24-inches.

   2. Follower Rings: Ductile Iron ASTM A536 or AISI Cl 020 Steel.

   3. Bolts and Nuts: High strength low alloy steel with heavy semi- finished hexagon nuts.

   4. Gaskets: Shall be of synthetic rubber suitable for operating conditions.

   5. Shop Finish: Manufacturer’s standard unless otherwise noted.

6. Manufacturer: ‘Baker 200, Dresser Style 39, Rockwell Series 411 or approved equal.

ITEM 502.3 FIRE HYDRANTS

502.3.1 Materials

All fire hydrants furnished shall conform strictly with the latest specification C-502 of the American Water Works Association Standards for dry barrel fire hydrants and must comply with the following supplementary details and changes or addition. All fire hydrants shall include integral quick connect per approved materials list.

A. Inlet Connection: Unless otherwise specified, the inlet connection shall ‘be a six (6) inch standard mechanical joint complete with all joint accessories. The inlet shoe shall be cast of the same or stronger metal than the lower barrel to prevent impact damage of the shoe. The interior of the shoe, including the lower valve plate and/or cap nut shall have a protective epoxy coating of at least 4 mils applied in the shop. If a cap nut is utilized, it must be locked in place with a stainless-steel lock washer or similar non-corrosive device and all machined surfaces must be protected from water intrusion to prevent corrosion and assure ease of field teardown or maintenance.

B. Main Valve: The main valve shall be reversible compression type, closing with the pressure and shall be not less than 5-1/4” in diameter. Composition of the main valve shall be molded rubber or neoprene having a durometer hardness of 90 + 5 and shall be not less than 1” thick to protect against hydrant chatter and give long term durability.

C. Outlet Nozzles: All hydrants shall be “three way”, equipped with two hose nozzles and one pumper nozzle.

D. Diameter Outlet Nozzles: The hydrant shall have two hose nozzles, two and one-half (2-1/2”) inches nominal I.D., and one pumper nozzle four and one-half (4-1/2”) inches nominal I.D. with Natural Standard Hose Threads.

E. Nozzle Attachment: All nozzles shall be mechanically connected into the barrel and have “0” Ring pressure seals to provide a positive seal between nozzles and hydrant barrel. A suitable nozzle lock shall be provided and shall be stainless steel or bronze. Nozzles shall not be caulked in.

   Nozzle caps shall be furnished with pentagon nut the same size as the operating nut. They shall be furnished with interior rubber gaskets that will seat against bronze nozzles. All caps shall be secured to hydrant barrel by heavy duty non-kinking chains with a chain loop on each cap that permits free turning of the cap, for speed and ease of removal by fire fighters.

F. Operating Nut: The operating nut shall be non-rising, pentagonal shape, measuring 1-1/8” at the top and 1-1/4” at the base from point to flat. Pentagon shall have a depth of at least one and one-quarter inch (1-1/4”). The hydrant shall be constructed in such a manner that the operating nut, “0” Rings and washers can be removed and replaced without removing the bonnet. All bearing surfaces of the operating nut shall be bronze.

G. Holddown Nut: Holddown nut must have intregal weather seal. Resilient seal between holddown nut and operating nut shall prevent debris entry to protect operating nut from damage.

H. Lubrication Reservoir: The hydrant shall have a completely “0” Ring sealed oil reservoir with a minimum of two (2) “0” Ring pressure seals to prevent contamination of the oil around the operating parts of the hydrant. The oil reservoir shall be cast in such a manner that all operating parts shall be repairable without removal of the bonnet to facilitate repairs and shall be of a design that all bearing surfaces and threaded parts will be automatically lubricated upon each operation of the hydrant. If bearing surfaces are not lubricated, the design shall keep operating friction to a minimum. A high wear resistant thermoset plastic anti-friction washer shall be in place above the thrust collar to minimize operation torque and facilitate long term ease of operation~ The operating threads must be sealed against contact with water to all times regardless of open or closed position of main valve. The hydrant shall have the capability of field personnel to visually. check oil level and add additional oil if needed. Filler and inspection plug shall be recessed or flush type.

I. Traffic Feature: Hydrants shall be “traffic model” having upper and lower barrel joined approximately two inches (2”) above the groundline by a breakable “swivel” flange providing 360-degree rotation of the upper barrel for nozzle positioning and must be capable of rotating barrel with line pressure on. The groundline shall not be less than eighteen inches (18”) below the centerline of the lowest nozzle and shall be clearly marked in a permanent manner on the lower barrel. A breakable stainless-steel stem coupling shall join the two-piece stem adjacent to the ground line flange. Screws, clevis pins, fasteners or bolts used in the coupling shall be Series 300 stainless steel. The weakened portion of the stem coupling shall be located to divert pressure from the stem coupling directly to the upper and lower stems when torque is applied in seat ring removal.

   Design of the coupling shall be such that when the coupling is broken, no part of the coupling will shatter or come loose and fall into hydrant and the break will not occur through the pins or bolts holding the coupling to the stem.

J. Drain Valve Assembly: Hydrants shall be equipped with two drain valves which drain the barrel when the hydrant is closed, and seal shut when the hydrant is in the open position. The upper valve plate,' seat ring and drain ring (shoe bushing) must be bronze and work in conjunction to form an all bronze drainway. Upper valve plate if not bronze, must be epoxy coated.

The bronze seat ring shall be a minimum 5-1/4" inside diameter and shall thread into a bronze drain ring forming an all bronze drainway with two (2) drain outlets for double protection against drain clogging and corrosive damage. All bronze components shall have less than 16% zinc alloy, Grade A to give high corrosion resistance as recommended 'in Section 2.1, Table I of American Water Works Association Standard C-502. Seat ring seals shall be "0" Rings. Hydrant shall be designed so that during opening and closing operation(s), water pressure force flushes the drain valve and drain openings to prevent clogging, thus allowing barrel drainage:

K. Repair: All internal operating parts shall be removable from above ground level with a' lightweight stem wrench.

L. Provisions for Extension: All hydrants shall be capable of being extended to accommodate future grade changes without excavation. Extension of the hydrant shall be made by adding at the groundline flange a new coupling and stem section equal to the length of the extension. This must facilitate easy field grade adjustment.

Stem extensions made by adding new section of stem to the threaded section of the stem at the top of the hydrant will not be' accepted.

Extension kits must be available from manufacturer in six-inch (6") increments.

M. Pressure Loss and Working Pressure: Pressure loss through one (1) four and one-half inch (4-1/2") nozzle at 1000 GPM shall not be more than 5.0 psi.

ITEM 502.6 VALVES

502.6.2 Resilient-Seated Gate Valves for Ordinary Water Works Service

Unless otherwise approved in writing, all Gate Valves for direct buried service in the City's distribution system, 6 inches through 12 inches in diameter, shall be Resilient Seated Gate Valves that conform strictly with the latest specification C-509 of the American Water Works Association Standards and must comply with the following supplementary details, changes or additions.

A. Body: Gate valves shall be iron body designed for a working pressure of 250 psi. All valves shall be hydrostatically tested

at 200 psi and shell tested at 500 psi. Any leakage during testing shall be cause for rejection. For ease of repair the body, bonnet and stuffing box shall be flanged together with ASTM Grade B bolts and nuts. Each valve shall have the maker's initials, pressure rating, and year in which manufactured cast in the body.

B. Stems: Stems shall be machined from manganese bronze rod with an integral forged thrust collar machined to size. The stems shall be non- rising and equipped for nut operation, which shall be opened by turning to the left.

C. Stem Seals: The seals shall consist of two "0" rings above and one "0" ring below the thrust collar. An anti-friction washer shall be located above and below the thrust collar for operating torque.

D. Stem Nut: The stem nut shall be ASTM'B-62 bronze.

E. Resilient Wedge: The wedge shall be cast iron, fully encapsulated in molded rubber complying with ASTM D2000. Wedge must have molded wedge guides preventing the disc from tilting downstream during operation. Protective guide cap bearings made of polymer bearing material to provide a bearing interface between the wedge guide and valve interior.

F. Paint and Protective Coatings: All valves furnished under these specifications shall be painted on the exterior as specified in AWWA C509 with asphalt varnish.

   All ferrous metal surfaces in the internal part of the valve shall be protected with a fusion epoxy coating 'to a nominal thickness of 10 mils for corrosion protection and shall be of a color that is easily identified as an epoxy coating.

   The proguard fusion epoxy coating shall fully comply with AWWA C550 .and certified NSF 61. The coating shall be 'non-toxic and shall not impart taste to water. The coating must be formulated from materials deemed acceptable per the Food & Drug Administration Document Title 21 of the Federal Regulations of Food Additives, Section 121.2514 entitled Resins and Polymeric Coatings. The coating shall 'have a satin finish and shall be suitable for field overcoating and touchup with the same coating' material without sanding or special surface preparation, or application of heat in excess of room temperature.

G. Experience and Certification: Valves, furnished under these specifications, shall be manufactured by a firm that has been producing valves of this general type continuously for. the past 'five (5) years. Each company or. manufacturer supplying valves under these specifications shall have on file, with the City of Anna, approved records of experience and detailed drawings of the proposed valves. Drawings

shall cover the specific valve to be furnished for installation and shall show all dimensions including metal thickness, construction details and materials used in all parts of the valve together with ASTM Designation and Structural properties of these materials.

The manufacturer shall furnish to the City of Anna, a Certification that the valve complies with the specifications without any exceptions. This certification shall apply to specific valves being installed within the City water distribution system. The certification shall state (1) the number of valves covered by the certifications, (2) the Addition where valves are being installed or the Project Name, and (3) name of Contractor installing valves.

The City may require the Manufacturer, Supplier or Contractor to dismantle valves at any time to determine compliance with these specifications. Location of any valve within the City system, installed after adoption of these specifications, that does not meet the specifications completely shall be cause for prohibiting the future use of any valves from the same manufacturer.

H. Tapping Sleeves: The materials for tapping sleeve bodies shall be cast-iron or ductile-iron in accordance with AWWA Standard Cl 10 (ANSI 21.10), in two sections, or halves to be bolted together with high-strength, corrosion resistant, low alloy steel bolts conforming to AWWA Standard C111 (ANSI 21.11).

Cast iron and ductile-iron sleeve shall be mechanical joint, or as specified, or dimensions to secure, proper fit on the type and class of pipe on which they are to be used. Each sleeve shall be furnished with a 3/8-inch test opening so that tests can' be made prior to tapping. Opening shall be provided with a 3/8-inch bronze plug.

502.6.5 Butterfly Valves

Add the following: All Butterfly Valves for installation underground in the City's distribution system 16 inches through 48 inches shall be in accordance with this specification.

All butterfly valves furnished shall conform strictly with the latest specification C-'504 of the American Water Works Association Standard for rubber-seated butterfly valves and must comply with the following supplementary details and changes or addition.

A. Body: The body shall be cast-iron ASTM A126, Class B and shall have face 'to face dimensions in accordance with AWWA Standards for short body, Class '150-B. All butterfly valves shall have a floating body seat ring to compensate for change in direction of flow to assure bottle-tight seal in either direction.

B. Shaft: Valve shafts shall be an 18-8, Type 304 stainless steel. Valve disc and shaft shall be standard self-adjusting Chevron “V” type packing. Shaft seals shall be of a design allowing replacement without removing the valve shaft.

C. Disc and Seat: The valve disc shall be cast iron ASTM A126, Class B. The valve seat shall be Buna-N located on the valve body. Valves 20” and smaller shall have a bonded seat that meets test procedures in ASTM D429, Method B. Valves 24” and larger shall be retained in the valve body’ by mechanical means without the use of metal retainers or other devices located in the flow stream.

D. Operator: Butterfly valve operators shall be of the traveling nut design. All operators shall have adjustable mechanical stop limiting devices to prevent over travel of the disc. The operator shall have a mechanical stop which will withstand an input torque of 450 Ft. lbs. against the stop. The traveling nut shall engage alignment grooves in the housing.

E. Operation: Unless otherwise shown in the plans, all valves shall open counter clockwise.

F. Valve Ends: Valve ends shall be Mechanical Joint End, or Flanged Ends. Mechanical joint valves shall come complete with bolts, nuts, gaskets and glands. It shall be the responsibility of the Contractor to coordinate the ends of the adjoining pipe with the type valve end he proposes to use.

G. Testing: All valves seats shall be tested at 150 psi as described in AWWA C-504 and in addition shall have a shell test of 300 psi. Any leakage shall be cause for rejection.

H. Paint and Protective Coatings: All butterfly ‘valves furnished under these specifications shall be painted on exterior as specified in AWWA C-504, with asphalt varnish.

   All ferrous metal surfaces in the internal part of the valve shall be protected with a two-part thermoset epoxy coating to a nominal thickness of 4 mils for corrosion protection and shall be of a color that is easily identified as an epoxy coating. This shall be applied in shop.

   The thermoset epoxy coating shall be a two-part epoxy and shall function as a physical, chemical and electrical barrier between the base metal to which it is applied and the surroundings. The coating shall be non-toxic and shall not impart taste to water. The coating must be formulated from materials deemed acceptable per the Food & Drug Administration Document Title 21 of the Federal Regulations of Food Additives, Section 121 .2514 entitled Resins & Polymeric Coatings. The coating shall have a satin finish and’ shall be suitable for field overcoating and touchup with the same coating material without sanding or special

surface preparation, or application of heat in excess of room temperatures.

I. Experience and Certification: Butterfly valves, furnished under these specifications, shall be manufactured by a firm that has been producing valves of this general type continuously for the past five (5) years. Each company or manufacturer supplying valves under these specifications shall have on file, at the City of Anna, approved records of experience and detailed drawings of the proposed valves. Drawings shall cover the specific valve to be furnished for installation in the City of Anna and shall show all dimensions including metal thickness, construction details and materials used in all parts of the valve together with ASTM Designation and structural properties of these materials.

   The manufacturer shall furnish to the City, a Certification that the valve complies with the specifications without any exceptions. This certification shall apply to specific valve being installed with the City water distribution system. The certification shall state (1) the number of valves covered by the certification, (2) the Addition where valves are being installed or the Project Name and (3) name of Contractor installing valves.

J. The City may require 'the Manufacturer, Supplier or Contractor to dismantle valves at any time to determine compliance with these specifications. Location of any valve with the City system, installed after adoption of these specifications, that does not meet the specifications completely shall be cause for prohibiting the future use of any valves from the same manufacturer.

ITEM 504 OPEN CUT - BACKFILL

ITEM 504.2 MATERIALS

504.2.2.1 Add the following sentence: All stone used for pipe embedment shall be standard crushed rock- aggregate, Grade 4, unless otherwise approved in writing.

ITEM 504.3 EXCAVATION AND FOUNDATION

Prior to start of excavation the Contractor shall remove and stockpile the Topsoil and protect the Topsoil from contamination during construction.

After the trench has been refilled, topsoil shall be replaced to the extent that rock, excavated from the trench, will be completely covered and the area is returned to its original condition, except that in cultivated areas a minimum of 12 inches of top soil shall be replaced.

ITEM 504.4 BACKFILL – GENERAL REQUIREMENTS

The material used in the backfill shall be pulverized to the extent necessary to produce, a free-flowing material free of clay balls larger than 6-inch diameter.

ITEM 504.5 EMBEDMENT

Add the Following: Rock Cuttings or Sand will not be permitted in the pipe bedding for sanitary sewer. Rock Cuttings will not be permitted in the pipe bedding forwater lines in the City of Anna.

504.5.2.15 Class “H” Embedment:

The embedment consists of a completely encased pipe with Standard Crushed Stone, Grade 4. Class ”H” Embedment shall be used on the P.V.C. Sanitary Sewer Pipe installed within the City of Anna.

After the trench has been cut to a depth below the barrel of the pipe a distance of 1/8 Bc (3 inches minimum and 6 inches maximum), the bedding layer shall be brought to a point slightly above grade with compacted crushed stone. Bell holes shall be formed and the pipe laid and joined as specified. The stone shall be brought up in uniform layers of six inches to a point six inches over the top of the pipe when compacted. On PVC Pipe 18 inches through 27 inches in diameter the crushed stone shall be brought up in uniform layers to a point twelve (12) inches over the top of the pipe when compacted.

ITEM 506 OPEN CUT – WATER CONDUIT INSTALLATION

ITEM 506.3 LAYING WATER CONDUIT

Valves for installation in the City's distribution system shall be installed by direct burial as shown on the standard detail sheets and shall be provided with valve boxes for operation of the valve. After the water samples are passed, all valves shall be accessible during all phases of construction.

ITEM 506.5 HYDROSTATIC TEST

All hydrostatic tests shall be maintained over a period of not less than four hours. “Before being accepted, all ductile iron, C-900 PVC or concrete cylinder water mains shall be tested with a hydraulic test pressure of not less than four hours. Concrete pressure pipe shall be tested with a hydraulic test pressure of 120 percent of the design pressure. Steel pressure pipe shall be tested with a hydraulic test pressure not to exceed 150 percent and not less than 120 percent of the designed working pressure. The rate of leakage of all pipe tested shall not exceed the amounts shown in the tables titled “Hydrostatic Test-C-900 PVC, Steel or Ductile Iron Water Mains” or “Hydrostatic Test-Concrete Cylinder Water Mains”. Water lines of material in combination shall be tested for the type of pipe (material) with the least stringent hydraulic test pressure and maintained over a period of not less than four hours.”

HYDROSTATIC TEST

C-900 OR 905 PVC, STEEL OR DUCTILE-IRON WATER MAINS

GALLONS ALLOWED									
L.F. Pipe	Pipe Diameter								
	4"	6"	8"	10"	12"	14"	16"	18"	20"
5	0.016	0.024	0.032	0.039	0.047	0.055	0.063	0.071	0.079
10	0.032	0.047	0.063	0.079	0.095	0.110	0.126	0.142	0.158
20	0.063	0.095	0.126	0.158	0.189	0.221	0.253	0.284	0.316
30	0.095	0.142	0.189	0.237	0.284	0.331	0.379	0.426	0.473
40	0.126	0.189	0.253	0.316	0.379	0.442	0.505	0.568	0.631
50	0.158	0.239	0.316	0.395	0.473	0.552	0.631	0.710	0.789
60	0.189	0.284	0.379	0.473	0.568	0.663	0.758	0.852	0.947
70	0.221	0.331	0.442	0.552	0.663	0.773	0.884	0.994	1.105
80	0.253	0.379	0.505	0.631	0.756	0.884	1.010	1.136	1.263
90	0.284	0.426	0.568	0.710	0.852	0.994	1.136	1.278	1.420
100	0.316	0.473	0.631	0.789	0.947	1.105	1.263	1.420	1.578
200	0.631	0.947	1.263	1.578	1.894	2.210	2.525	2.841	3.157
300	0.947	1.420	1.894	2.367	2.841	3.314	3.788	4.261	4.735
400	1.263	1.894	2.525	3.157	3.788	4.419	5.051'	5.682	6.313
500	1.578	.2.367	3.157	3.946	4.735	5.524	6.313	7.102	7.891
600	1.894	2.841	3.788	4.735	5.682	6.629	7.576	8.523	9.470
700	2.210	3.314	4.419	5.524	6.629	7.734	8.838	9.943	11.048
800	2.525	3.788	5.051	6.313	7.576	8.838	10.101	11.364	12.626
900	2.841	4.261	5.682	7.102	8.523	9.943	11.364	12.784	14.205
1000	3.157	4.735	6.313	7.891	9.470	11.048	12.626	14.205	15.783

Maximum allowable water loss in 4 hours at 180 pounds per square inch of pressure for a rate of 25 gallons per inch diameter of pipe per mile over a 24-hour period

EQUATION THE ABOVE CHART IS BASED ON:

$$Maximum\ Loss\ (Gal.) = 25 \times Diameter\ of\ Pipe\ in\ Inches \times \frac{LF\ of\ Pipe}{5280} \times \frac{4}{24}$$

HYDROSTATIC TEST

CONCRETE CYLINDER WATER MAINS

GALLONS ALLOWED									
L.F. Pipe	Pipe Diameter								
	4"	6"	8"	10"	12"	14"	16"	18"	20"
5	0.031	0.047	0.063	0.078	0.095	0.110	0.126	0.142	0.158
10	0.063	0.095	0.126	0.158	0.189	.0.221	0.253	0:284	0.315
20	0.126	0.189	0.253	0.316	0.379	0.442	0.505	0.568	0.631
30	0.188	0.284	0.379	0.473	0.568	0.663	0.758	0.852	0.947
40	0.253	0.379	0.505	0.631	0.758	0.884	1.010	1.136	1.263
50	0.316	0.473	0.631	0.789	0.947	1.105	1.263	1.420	1.578
60	0.379	0.568	0.758	0.947	1.136	.1.326	1.515	1.704	1.894
70	0.442	0.663	0.884	1.105	1.326	1.547	1.768	1.989.	2.210
80	0.505	0.758	1.010	1.263.	1.515	1.768	2.020	2.273	2.525
90	0.568	0.852	1.136	1.420	1.704	1.989	2.273	2.557	2.841
100	0.631	0.947	1.263	1.578	1.894	2.209	2.525	2.841	3.156
200	1.263	1.894	2.525	3.156	3.788	4.419	5.050	5.682	6.313
300	1.894	2.841	3.788	4.735	5.682	6.628	7.575	8.522	9.470
400	2.525	3.788	5.050	6.313	7.575	8.838	10.100	11.363	12.626
500	3.158	4.735	6.313	7.891	9.470	11.047	12.626	14.204	15.782
600	3.788	5.682	7.575	9.469	11.363	13.257	15.151	17.045	18.938
700	4.419	6.628	8.838	11.047	13.257	15.468	17.676	19.885	22.095
800	5.050	7.575	10.100	12.626	15.152	17.676	20.201	22.726	25.251
900	5.682	8.522	11.363	14.204	17.044	19.886	22.726	25.567	28.405
1000	6.313	9.469	12.626	15.782	18.939	22.096	25.253	28.408	31.564

Maximum allowable water loss in 4 hours at 180 pounds per square inch of pressure for a rate of 50 gallons per inch diameter of pipe per mile over a 24-hour period

EQUATION THE ABOVE CHART IS BASED ON:

$$Maximum\ Loss\ (Gal.) = 50 \times Diameter\ of\ Pipe\ in\ Inches \times \frac{LF\ of\ Pipe}{5280} \times \frac{4}{24}$$

ITEM 506.7 PURGING AND DISINFECTION OF WATER

Add the following: On all waterlines installed in the City of Anna the Contractor shall be responsible for Purging, Testing and Sterilization of the completed lines.

DIVISION 800 – MISCELLANEOUS CONSTRUCTION & MATERIALS

ITEM 801.3 RAILING

Reflectorized marking for guard rail and other traffic control used shall meet the requirements of 3M Scotchlite Brand Reflective Sheeting Grade, Series 2800, 3800 or 5800, or equal. The marking shall conform to U.S. Department of Transportation, Federal Highway Administration, STANDARD SPECIFICATIONS FOR CONSTRUCTION OF ROADS AND BRIDGES ON FEDERAL HIGHWAY PROJECTS, 1979 FP-79, Type III A, Sections 633.36 and 718.01 and Federal Supply Service, General Services Administration, LS-300 C, SHEETING AND TAPE REFLECTIVE NON-EXPOSED LENS, Reflectivity 2, Class 4.

ITEM 801.5 WIRE FENCE

801.5.2.1 Wire Fencing Fabric: All chain link fencing shall be No. 9 gage copper bearing open-hearth steel wire.

801.5.2.2 Posts

801.5.2.2.1 Metal: All posts shall be heavily galvanized by the hot-dip process after fabrication and shall be fitted with watertight malleable iron caps. All posts shall be of the following size and shape:

Line Posts: “H” Section hot rolled weighing not less than 4.10 pounds per linear foot or 3-1/2-inch O.D. pipe weighing not less than 3.65 pounds per linear foot.

Terminal Posts: Three-inch (3”) steel pipe weighing not less than 5.79 pounds per linear foot.

Gate Posts: Four-inch (4”) O.D. steel pipe weighing not less than 9.11 pounds per linear foot.

801.5.2.3 Rails. Gates. Braces and Fittings: Shall be 1-5/8-inch steel pipe weighing not less than 2.27 pounds per linear foot.

ITEM 803.2 GABION STRUCTURES

803.2.2 Materials

Add the sentence: All wire used, including tie and connecting wire, shall be certified by Mill Test Reports showing compliance with specification requirements.

803.2.2.2 Stone

Add the following: Facing stone shall be hand selected, large stone and shall be selected for best appearance. Facing stone shall be an off-white color and prior to laying the stone, samples shall be delivered' to the site and shall be approved 'by the Engineer for gradation and appearance.

ITEM 805 ELECTRICAL COMPONENTS AND CONDUIT

ITEM 805.3 MATERIAL

Add the following: Pull Box. All pull boxes shall be Quazite precast polymer concrete or approved equal. Boxes shall be approximately 17" x 30" x 30" and shall be furnished with a concrete cover.

Each change of direction in the conduit run requires a pull box. Max spacing of pull boxes shall be one hundred feet (100').

Section 8. C STANDARD DRAWINGS

CITY OF ANNA, TEXAS

STANDARD DRAWINGS (Note: In the event of any conflicts, the standard drawings that follow in this Section 8.C. shall govern.)

DRAWING NO.	DRAWING TITLE
PAV-01	REINFORCED CONCRETE PAVEMENT - JOINTS
PAV-02	REINFORCED CONCRETE PAVEMENT - TRANSVERSE JOINT SPACING
PAV-03	REINFORCED CONCRETE PAVEMENT - STREET HEADERS
PAV-04	CONCRETE CURBS & CURB WITH GUTTER - INTEGRAL, SEPARATE & DOWELED
PAV-05	MEDIAN ISLAND PAVEMENT - NOSE & LEFT TURN LANE
PAV-06	MEDIAN ISLAND PAVEMENT - MONOLITHIC CONCRETE NOSE
PAV-07	CONCRETE DRIVEWAY APPROACH - RADIUS RETURN
PAV-08	CONCRETE DRIVEWAY APPROACH - RESIDENTIAL
PAV-09	REINFORCED CONCRETE SIDEWALK - JOINTS & SPACING
PAV-10	MID BLOCK BARRIER FREE RAMP - TYPE 'A'
PAV-11	BARRIER FREE RAMP - TYPE 'B' (1 OF 2)
PAV-11A	BARRIER FREE RAMP - TYPE 'B' (2 OF 2)
PAV-12	BARRIER FREE RAMP - TYPE 'C'
PAV-13	TYPICAL UTILITY LOCATION - IN PAVEMENT
WAT-01	GATE VALVE 4'' TO 12'' - BOX & EXTENSION STEM
WAT-02	VAULT CONSTRUCTION PLAN - HORIZONTAL GATE VALVE ≥ 16"
WAT-03	VAULT CONSTRUCTION PROFILE - HORIZONTAL GATE VALVE ≥ 16"
WAT-04	VAULT CONSTRUCTION DIMENSIONS - VERTICAL GATE VALVE ≥ 16"
WAT-05	VAULT CONSTRUCTION SECTION - VERTICAL GATE VALVE ≥ 16"
WAT-06	VAULT CONSTRUCTION PLAN - BUTTERFLY VALVE ≥ 16"
WAT-07	VAULT CONSTRUCTION PROFILE - BUTTERFLY VALVE ≥ 16"
WAT-08	COMBINATION AIR VACUUM VALVE - TYPE "1"
WAT-09	COMBINATION AIR VACUUM VALVE - TYPE "2" SECTION
WAT-10	AIR RELEASE VALVE AIR VENT - TYPE "2"
WAT-11	FLUSH POINT INSTALLATION - TYPE "1"
WAT-12	FIRE HYDRANT - INSTALLATION
WAT-12A	FIRE HYDRANT - REBAR & PLACEMENT
WAT-13	WATER SERVICE INSTALLATION - 1" LINE
WAT-14	WATER SERVICE INSTALLATION - 1-1/2" OR 2" LINE
WAT-15	4'' COMBINATION WATER SERVICE - WITH 4" METER
WAT-16	ENCASEMENT PIPE - WATER LINE BY BORE
WAT-17	BLOW OFF VALVE - INSTALLATION
WAT-18	AUTOMATIC FLUSH VALVE - RURAL INSTALLATION
WAT-19	WATER METER LID - METERS UP TO 1"
WAT-19A	WATER METER LID - METERS FROM 1.5" TO 2"
WAT-20	HORIZONTAL THRUST BLOCK - AT PIPE BEND (1 OF 3)
WAT-20A	HORIZONTAL THRUST BLOCK - AT PIPE BEND (2 OF 3)
WAT-20B	HORIZONTAL THRUST BLOCK - AT PIPE BEND (3 OF 3)
WAT-21	HORIZONTAL THRUST BLOCK - AT TEES & PLUGS
WAT-22	VERTICAL THRUST BLOCK - AT PIPE BEND
WAT-23	THRUST BLOCK - GENERAL NOTES
SS-01	WASTEWATER MAIN TIE-IN - AT CLEANOUT OR MANHOLE STUBOUT
SS-02	WASTEWATER MANHOLE - PRECAST
SS-03	WASTEWATER MANHOLE - CAST-IN-PLACE
SS-04	WASTEWATER MANHOLE - PRESSURE MANHOLE
SS-05	WASTEWATER MANHOLE - INTERNAL DROP CONNECTION
SS-06	WASTEWATER MANHOLE - VENTED TYPE 'S'
SS-06A	WASTEWATER MANHOLE - VENTED FLAT TOP
SS-07	WASTEWATER MANHOLE - LINE INTERSECTION
SS-08	WASTEWATER MAIN - CLEANOUT
SS-09	WASTEWATER SERVICES - LATERAL CONNECTION
SS-10	WASTEWATER SERVICES - CLEANOUT FRAME & COVER
SS-11	WASTEWATER SERVICES - DEEP LATERAL CONNECTION
SS-12	RESIDENTIAL LATERAL - WITH CLEANOUT AT PROPERTY LINE
SS-13	ENCASEMENT PIPE - WASTEWATER LINE BY BORE
SS-14	WASTEWATER MANHOLE - STANDARD COVER
SS-14A	WASTEWATER MANHOLE - BOLTED COVER
SS-15	WASTEWATER MANHOLE - FALSE MANHOLE BOTTOM
SS-16	I&I BARRIER & GATOR WRAP - 6" GATOR WRAP
SS-17	MANHOLE & VALVE VAULT - MOW STRIP
EMB-01	EMBEDMENT - CLASS "B+" & CLASS "G"
EMB-02	EMBEDMENT - CLASS "H" & STORM SEWER
EMB-03	PAVEMENT CUT & REPAIR - CONCRETE & PARKWAY
EMB-04	PAVEMENT CUT & REPAIR - ASPHALT
EMB-05	INFILTRATION PROTECTION - CONDUIT UNDER CHANNEL
STM-01	STORMWATER CURB INLET - STANDARD (1 OF 2)
STM-01A	STORMWATER CURB INLET - STANDARD (2 OF 2)
STM-02	STORMWATER CURB INLET - REINFORCING STEEL
STM-03	STORM SEWER - STANDARD INLET COVER
STM-03A	STORM SEWER - BOLTED INLET COVER
STM-04	STORMWATER HEADWALL - TYPE "C"
STM-05	JUNCTION BOX - 4', 5', OR 6' SQUARE (1 OF 2)
STM-05A	JUNCTION BOX - 4', 5', OR 6' SQUARE (2 OF 2)
L-01	TREE PROTECTION - PLAN DETAIL

THE CITY OF Anna

~~COVER SHEET~~

~~INDEX OF STANDARD DRAWINGS~~

REV. DATE: AUGUST 2020

STANDARD DRAWING NO.

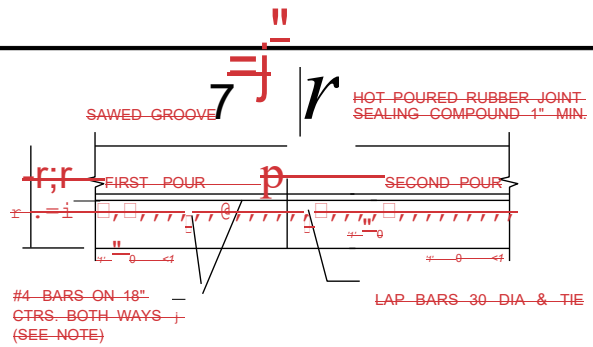

CONSTRUCTION JOINT

N.T.S.

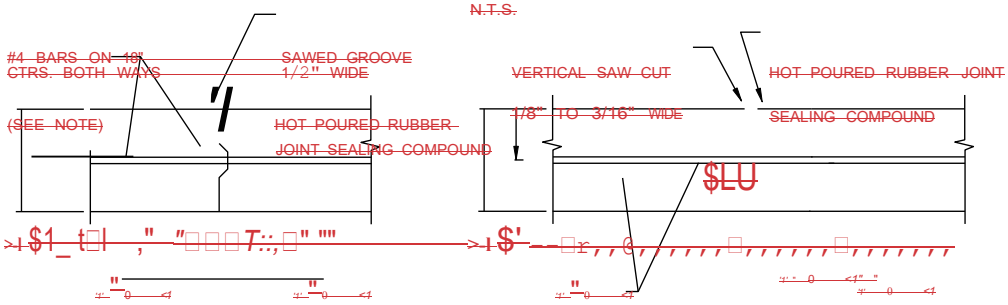

KEYWAY JOINT

(FOR PAVEMENT THICKNESS > 6")
N.T.S.

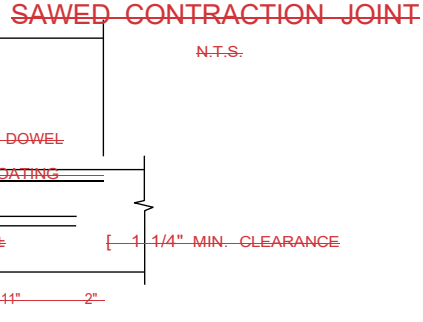

SAWED CONTRACTION JOINT

N.T.S.

REDWOOD EXPANSION JOINT FILLER

DOWEL SUPPORT SHALL BE OF A METHOD APPROVED BY ENGINEER

EXPANSION JOINT

(SPACED 400 FT. MAXIMUM; LOCATE AT STRUCTURES AND AT INTERSECTION P.C.'S & P.T.'S)
N.T.S.

THE CITY OF Anna

REINFORCED CONCRETE PAVEMENT	REV DATE:AUGUST 2020
JOINTS	STANDARD DRAWING NO. PAV-01

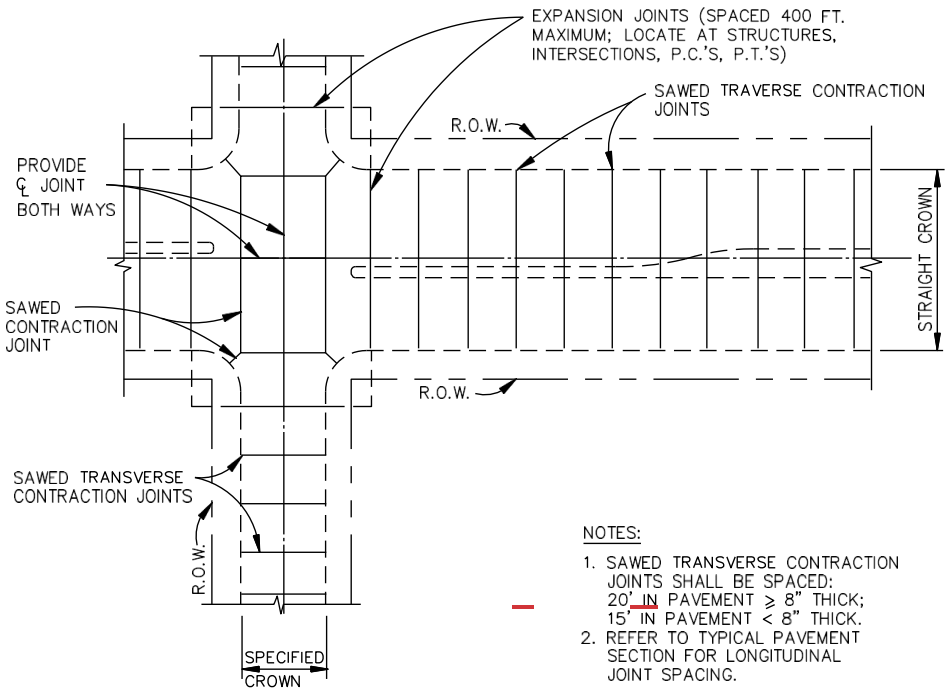

NOTES:

1. SAWED TRANSVERSE CONTRACTION JOINTS SHALL BE SPACED:
   20' IN PAVEMENT ≥ 8" THICK;
   15' IN PAVEMENT < 8" THICK.
2. REFER TO TYPICAL PAVEMENT SECTION FOR LONGITUDINAL JOINT SPACING.

SPACING DIAGRAM FOR TRANSVERSE JOINTS

N.T.S.

THE CITY OF Anna	~~REINFORCED CONCRETE PAVEMENT~~	REV. DATE: AUGUST 2020
	~~TRANSVERSE JOINT SPACING~~	STANDARD DRAWING NO. ~~PAV-02~~

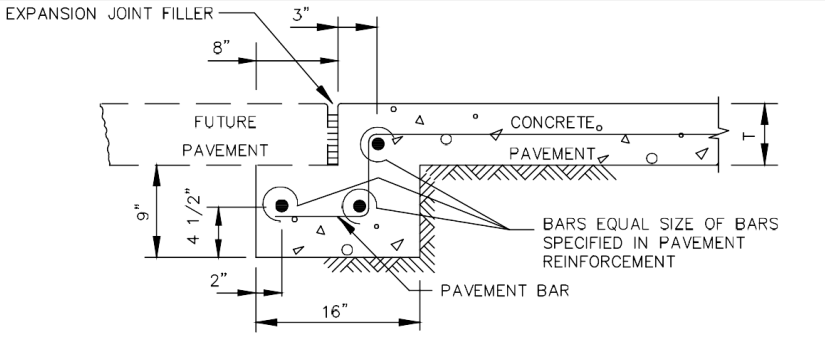

STREET HEADER FOR FUTURE PAVEMENT

N.T.S.

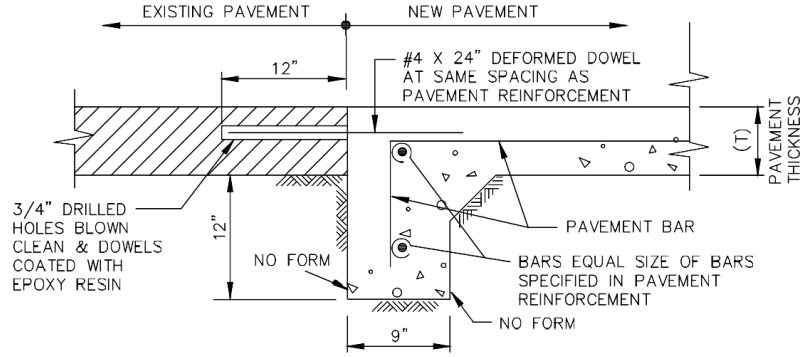

STREET HEADER AT EXISTING PAVEMENT

N.T.S.

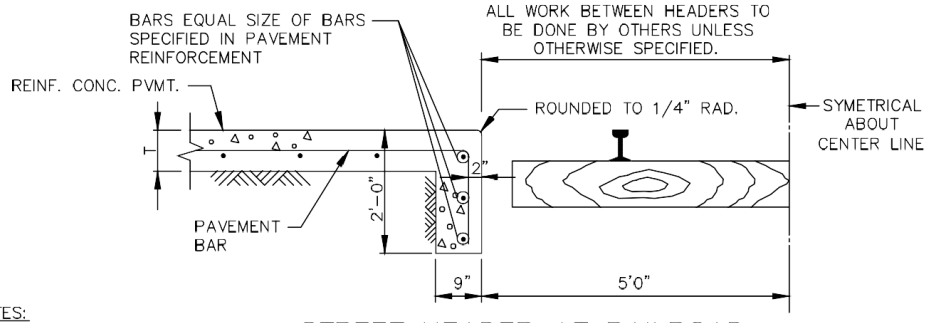

NOTES:

1. PAVEMENT BARS TO BE BENT DOWN INTO HEADER.
2. HEADER AND PAVEMENT TO BE MONOLITHIC.

STREET HEADER AT RAILROAD

N.T.S.

THE CITY OF Anna	~~REINFORCED CONCRETE PAVEMENT~~	REV DATE: MARCH 2020
	~~STREET HEADERS~~	STANDARD DRAWING NO. ~~PAV-03~~

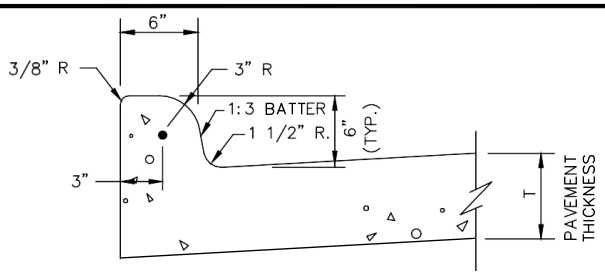

INTEGRAL CURB & GUTTER

N.T.S.

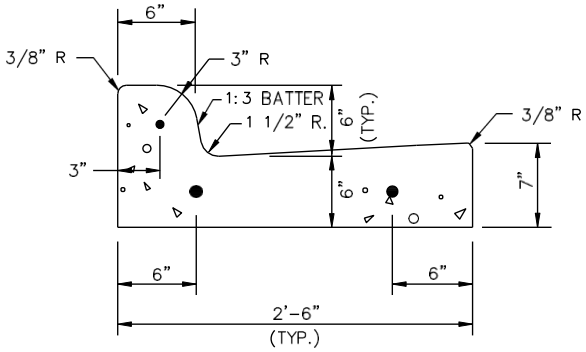

SEPARATE CURB & GUTTER

N.T.S.

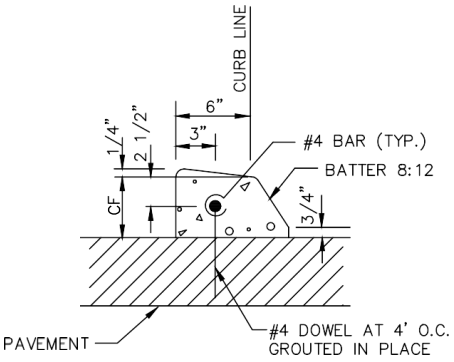

DOWELED CURB

N.T.S.

NOTES:

1. REINFORCEMENT SHALL BE NO. 4 BARS.
2. CONCRETE SHALL BE CLASS "C".
3. "CF" IS 6" UNLESS OTHERWISE SPECIFIED.
4. ALL CURBS ARE CONSTRUCTED OF PORTLAND CEMENT CONCRETE UNLESS OTHERWISE SHOWN.
5. GRADE SHALL BE MEASURED AT BACK OF CURB.

THE CITY OF Anna	~~CONCRETE CURBS & CURB WITH GUTTER~~	REV DATE: MARCH 2020
	~~INTEGRAL, SEPARATE & DOWELED~~	STANDARD DRAWING NO. ~~PAV-04~~

NOTE:

STAMPED CONCRETE SHALL BE INTEGRAL STAINED INCRETE COLOR "REDWOOD W/ DARK GRAY" OR APPROVED EQUAL AND SHALL BE INSTALLED PER CITY STANDARDS.

CONTACT INCRETE SYSTEMS FOR ADDITIONAL INFORMATION OR ASSISTANCE WITH SPECIFICATIONS AND INSTALLATION PROCEDURES AT 1-800-752-4626

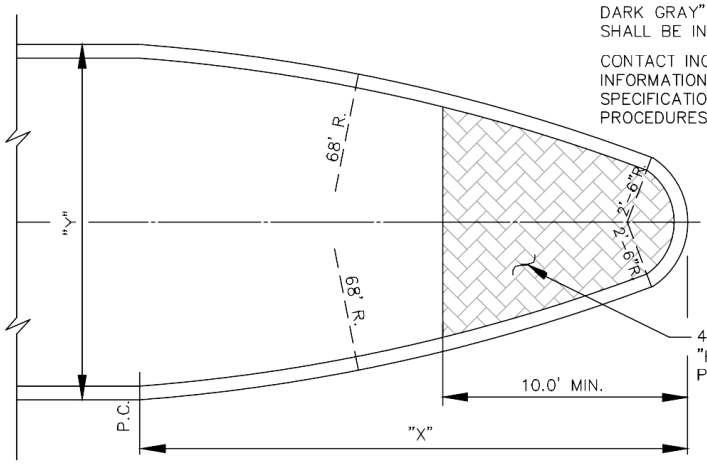

DIMENSIONS OF MEDIAN NOSE

Y = 15'	X = 27.6'
Y = 16'	X = 28.8'
Y = 17'	X = 29.9'
Y = 18'	X = 30.9'

CONCRETE NOSE FOR MEDIAN ISLAND

N.T.S.

NOTE:

MEDIAN PAVING SHALL EXTEND TO POINT WHERE MEDIAN IS 6' WIDE. IF MEDIAN IS 6' WIDE, PAVING SHALL EXTEND 15' FROM NOSE. FOR MEDIANS WIDER THAN 6' PAVING SHALL EXTEND 10' FROM NOSE. ALL DISTANCES ARE MINIMUM.

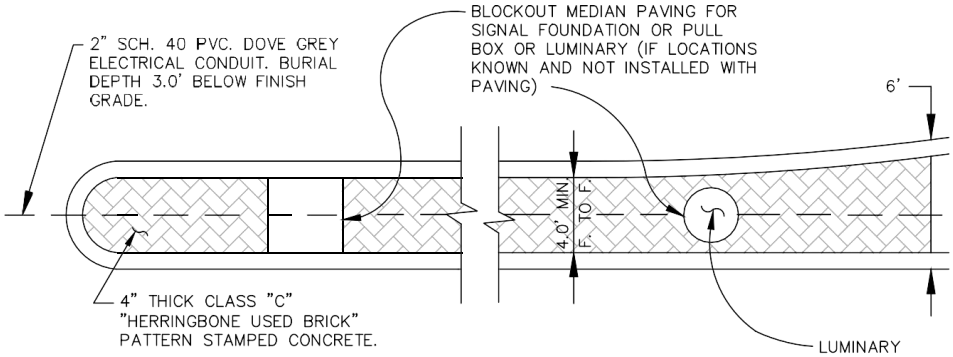

LEFT TURN LANE MEDIAN PAVEMENT

N.T.S.

THE CITY OF Anna	~~MEDIAN ISLAND PAVEMENT~~ NOSE & LEFT TURN LANE	REV DATE: MARCH 2020 STANDARD DRAWING NO. ~~PAV-05~~

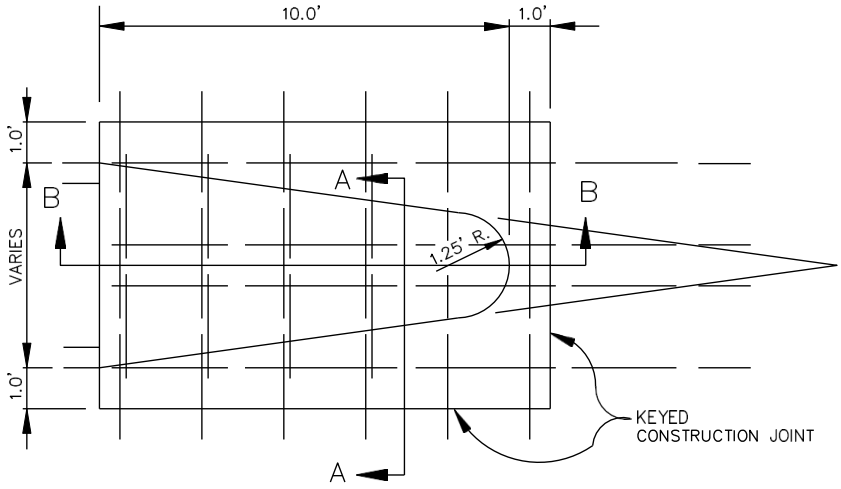

MONOLITHIC CONCRETE MEDIAN NOSE

N.T.S.

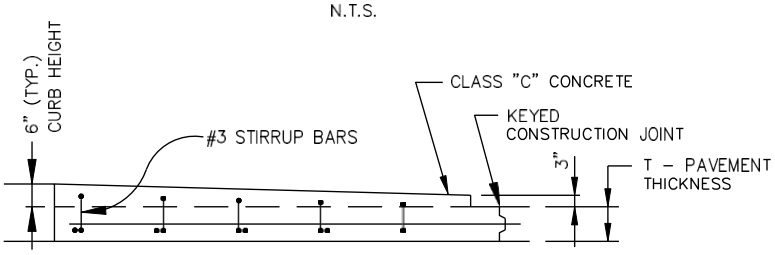

SECTION B–B

N.T.S.

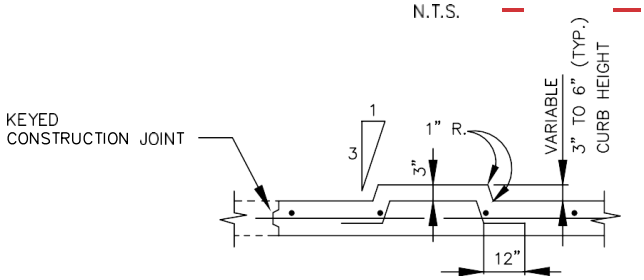

SECTION A–A

N.T.S.

NOTE:

REINFORCEMENT BARS SHALL MATCH THOSE IN PAVEMENT.

THE CITY OF Anna	~~MEDIAN ISLAND PAVEMENT~~	REV DATE: MARCH 2020
	~~MONOLITHIC CONCRETE NOSE~~	STANDARD DRAWING NO. ~~PAV-06~~

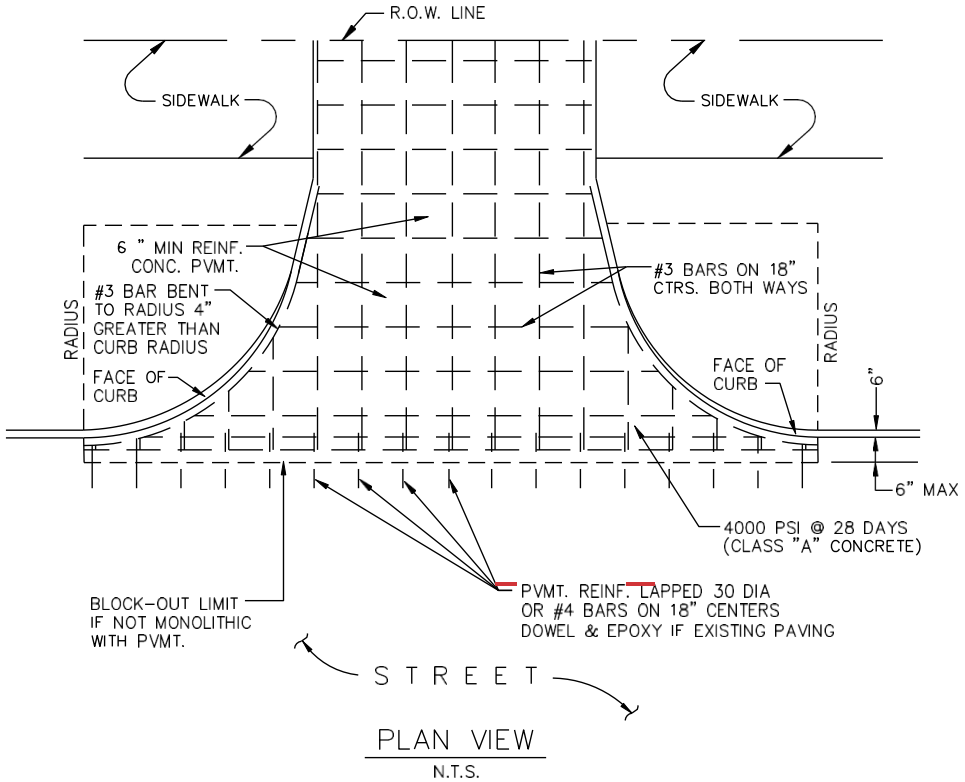

PLAN VIEW

N.T.S.

THE CITY OF Anna	~~CONCRETE DRIVEWAY APPROACH~~	REV DATE: DECEMBER 2020
	~~RADIUS RETURN~~	STANDARD DRAWING NO. ~~PAV-07~~

~~PLAN~~

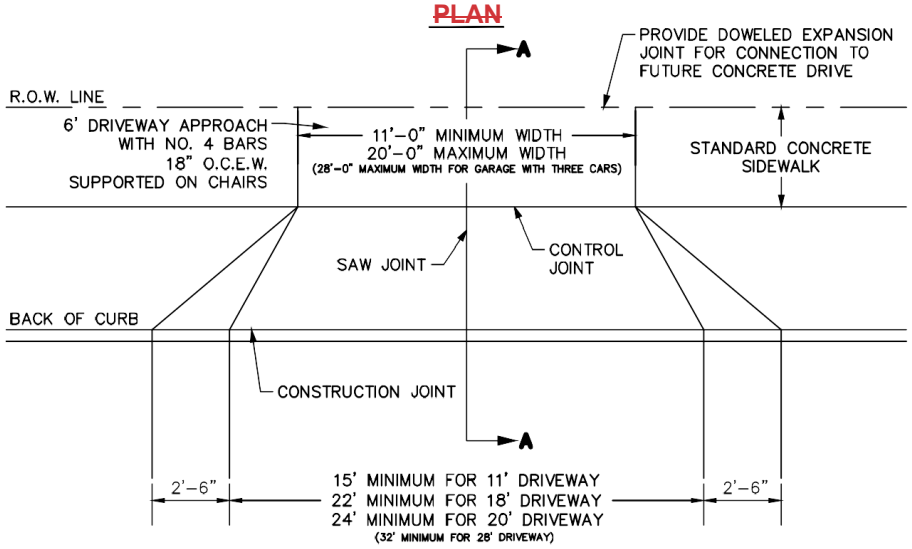

~~ELEVATION~~

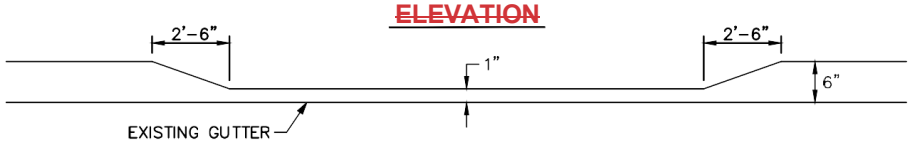

~~SECTION A-A~~

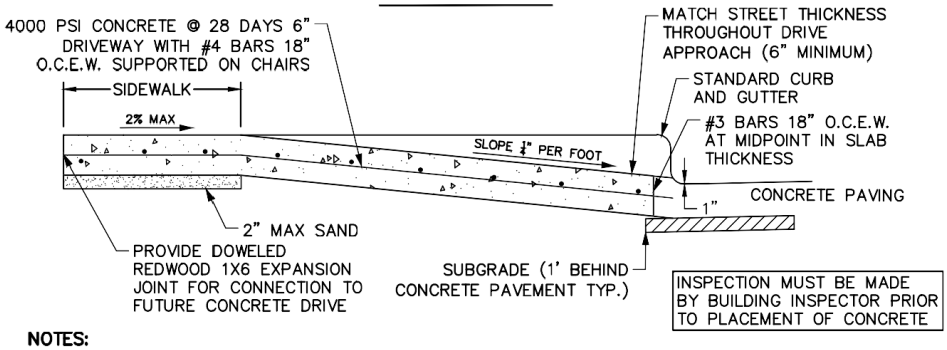

NOTES:

1. EXISTING CURB AND GUTTER, IF ANY MUST BE SAWED AS DIRECTED BY THE CITY ENGINEER, HORIZONTAL CURB CUT SHALL BE AT AN ELEVATION OF 1" ABOVE THE EXISTING GUTTER WITH A MINIMUM LENGTH AS SHOWN. THE TRADITIONAL SAW CUT SHALL HAVE A RUN OF 2'-6" AND SHALL RISE TO MEET THE EXISTING TOP OF CURB. ALL EXPOSED EDGES SHALL BE GROUND TO A ¼" RADIUS. SAW CUTTING SHALL BE PERFORMED WITH A RIDE-ON SAW EQUIPPED WITH A DIAMOND BLADE.
2. SIDEWALK SECTION THRU DRIVEWAY SHALL BE POURED SAME THICKNESS AS DRIVEWAY APPROACH. (EXISTING SIDEWALK, IF ANY, SHALL BE REMOVED AND REPLACED.)
3. THIS WORK SHALL NOT DISRUPT THE DESIGN FLOWLINE OF THE EXISTING GUTTER.

THE CITY OF Anna	~~CONCRETE DRIVEWAY APPROACH~~	REV DATE: DECEMBER 2020
	~~RESIDENTIAL~~	STANDARD DRAWING NO. ~~PAV-08~~

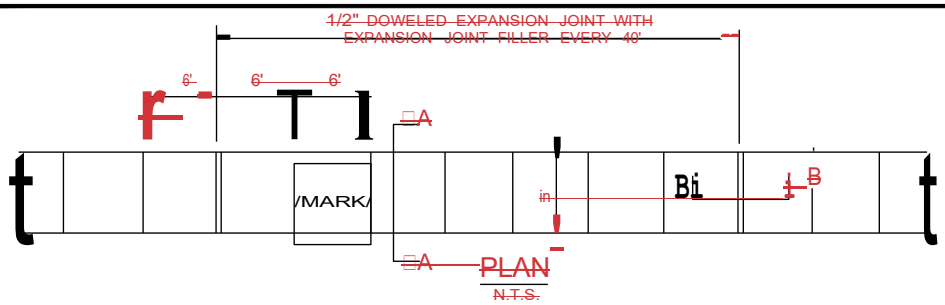

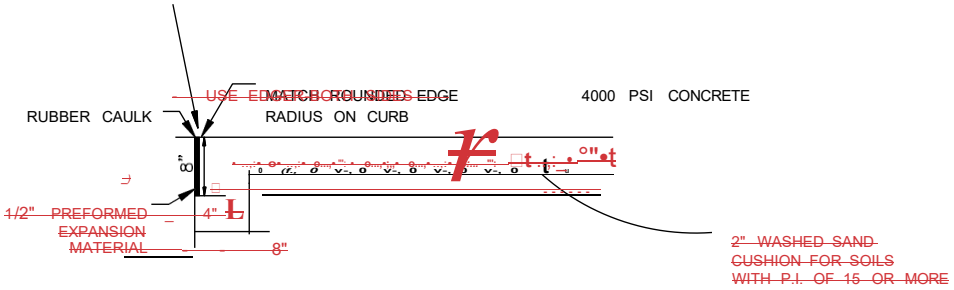

JOINT LUG DETAIL FOR MEDIAN PAVEMENT OR SIDEWALK ADJACENT TO CURB

N.T.S.

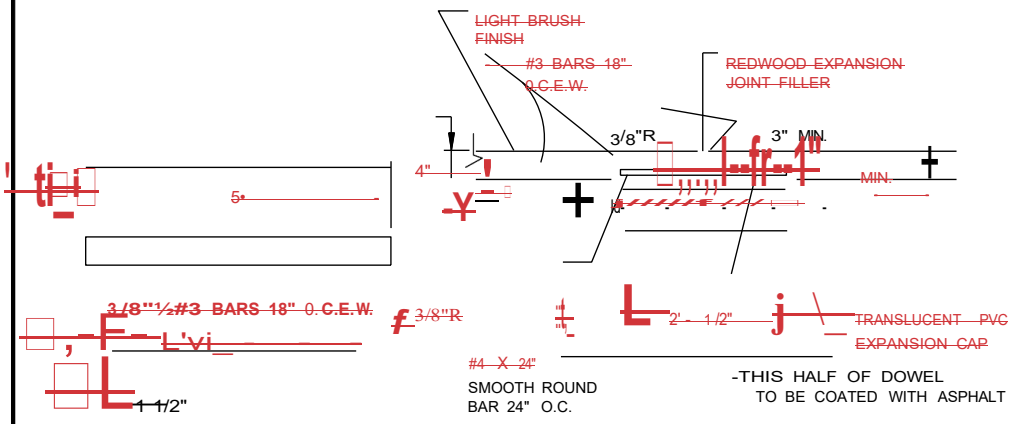

SECTION"A-A"

N.T.S.

SECTION"B-B"

N.T.S.

NOTE:

1. REFER TO STANDARD SPECIFICATION ITEM 8.3. FOR ALTERNATE REINFORCEMENT.
2. CROSS SLOPE OF SIDEWALK SHALL BE ± 1/4" PER FT. MIN. TO ± 3/8" PER FT. MAX.
3. WHERE LESS THAN 5' 0" SIDEWALK WIDTH MAY BE SPECIFIED BY OWNER.
4. ALL HONEYCOMB IN BACK OF CURB TO BE TROWEL PLASTERED BEFORE POURING SIDEWALK.
5. LUG MAY BE FORMED BY SHAPING SUBGRADE TO APPROXIMATE DIMENSIONS SHOWN.

THE CITY OF Anna

REINFORCED CONCRETE SIDEWALK	REV. DATE:DECEMBER 2020
	STANDARD DRAWING NO.
JOINTS & SPACING	PAV-09

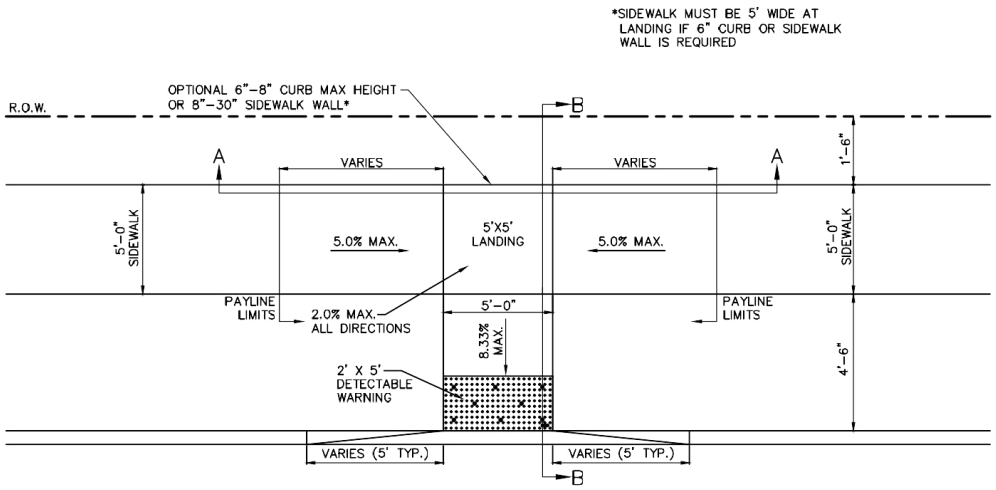

MID-BLOCK CURB RAMP

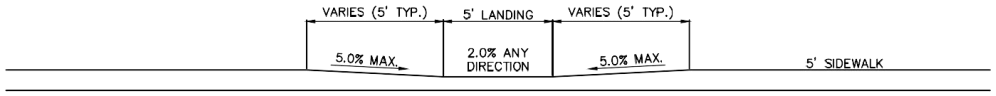

SECTION A-A

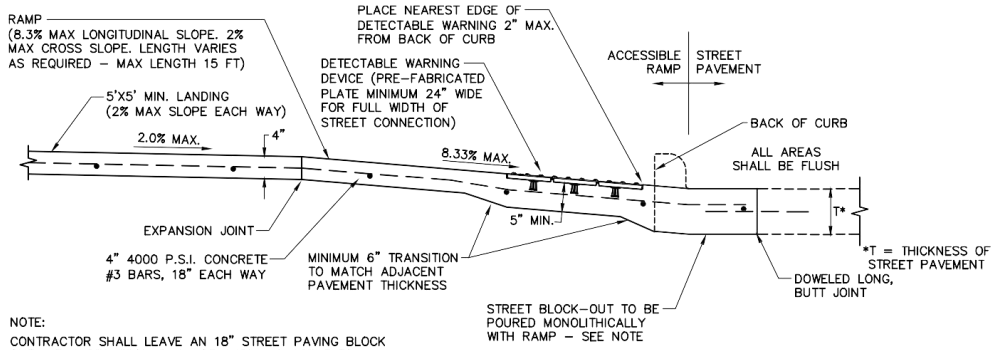

NOTE:
CONTRACTOR SHALL LEAVE AN 18" STREET PAVING BLOCK OUT, MEASURED FROM BACK OF CURB, ADJACENT TO CURB RAMPS. BLOCK OUT SHALL BE POURED MONOLITHICALLY WITH CURB RAMP, DOWELED INTO STREET PAVEMENT (18" SMOOTH #3 DOWELS PLACED 18" O.C.)

SECTION B-B

THE CITY OF Anna

~~MID-BLOCK BARRIER FREE RAMP~~

~~OPPOSITE "T" INTERSECTION~~

REV DATE: DECEMBER 2020

STANDARD DRAWING NO.

~~PAV-10~~

PEDESTRIAN ACCESSIBILITY (WITHIN PUBLIC R.O.W.)

ALL NEWLY CONSTRUCTED SIDEWALKS, CURB RAMPS AND CROSSWALKS INSTALLED WITHIN CITY OF ANNA PUBLIC RIGHTS-OF-WAY SHALL BE CONSIDERED A PEDESTRIAN ACCESS ROUTE AND SHALL CONFORM TO THE MOST CURRENT ~~DRAFT~~ GUIDELINES FOR PUBLIC RIGHTS-OF-WAY CREATED BY THE UNITED STATES ACCESS BOARD.

CURB RAMPS

1. ALL SLOPES SHOWN ARE MAXIMUM ALLOWABLE. LESSER SLOPES THAT WILL STILL DRAIN PROPERLY SHOULD BE USED. ADJUST CURB RAMP LENGTH OR GRADE OF APPROACH SIDEWALKS AS DIRECTED.
2. LANDINGS SHALL BE 5'X 5' MINIMUM WITH A MAXIMUM 2% SLOPE IN EACH DIRECTION.
3. CLEAR SPACE AT THE BOTTOM OF CURB RAMPS SHALL BE A MINIMUM OF 4'X 4' WHOLLY CONTAINED WITHIN THE CROSSWALK AND WHOLLY OUTSIDE THE PARALLEL VEHICULAR TRAVEL PATH.
4. MAXIMUM ALLOWABLE CROSS SLOPE ON SIDEWALK AND CURB RAMP SURFACES IS 2%.
5. ADDITIONAL INFORMATION ON CURB RAMP LOCATION, DESIGN, LIGHT REFLECTIVE VALUE AND TEXTURE MAY BE FOUND IN THE MOST CURRENT EDITION OF THE TEXAS ACCESSIBILITY STANDARDS (TAS) AND 16 TAC 68.102. FEDERAL GUIDELINES SHALL SUPERSEDE ANY CONFLICTS.
6. CROSSWALK DIMENSIONS, CROSSWALK MARKINGS AND STOP BAR LOCATIONS SHALL BE AS SHOWN ELSEWHERE IN THE PLANS. AT INTERSECTIONS WHERE CROSSWALK MARKINGS ARE NOT REQUIRED, CURB RAMPS AND ACCESSIBLE ROUTES SHALL ALIGN WITH THEORETICAL CROSSWALKS UNLESS OTHERWISE DIRECTED.
7. HANDRAILS ARE NOT REQUIRED ON CURB RAMPS.
8. PROVIDE A FLUSH TRANSITION WHERE THE CURB RAMPS CONNECT TO THE STREET.
9. ACCESSIBLE ROUTES ARE CONSIDERED "RAMPS" WHEN LONGITUDINAL SLOPES ARE BETWEEN 5% AND 8.3% (MAXIMUM ALLOWABLE). SIDEWALKS UNDER 5% LONGITUDINAL SLOPE ARE DEEMED ACCESSIBLE ROUTES AND MUST FOLLOW ALL APPLICABLE GUIDELINES.

EJ – EXPANSION JOINT

CJ – CONSTRUCTION JOINT

– – – –

(A'! DETECTABLE WARNING DEVICES (DWD) SHALL BE PRE-MANUFACTURED CAST-IN-PLACE PLATES FROM THE CITY OF ANNA APPROVED VENDOR
I..8) LIST INSTALLED TO THE MANUFACTURER'S SPECIFICATIONS, AND SHALL MEET ALL ADA REQUIREMENTS. NO BRICK PAVERS ALLOWED. COLOR TO BE BRICK RED OR SIMILAR. DWD SHALL BE 24 INCHES IN LENGTH FOR THE FULL WIDTH OF THE STIREET CONNECTION STARTING AT THE BACK OF CURB. A MAXIMUM 2 INCH BORDER SHALL BE ALLOWED ON THE SIDES OF THE DWD FOR PROPER INSTALLATION.

® ALSO KNOWN AS " CLEAR SPACE" PER ADA PROWAG, THE CITY REQUIRES A MINIMUM LANDING SPACE OF 5-FOOT BY 5-FOOT AT THE BOTTOM OF EVERY RAMP. THIS LANDING SPACE SHALL HAVE A CROSS SLOPE IN BOTH DIRECTIONS THAT DOES NOT EXCEED 2.0%. AND SHALL BE WHOLLY OUTSIDE THE PARALLEL VEHICULAR TIRAVEL PATH.

© THE RAMP COMPONENT OF THE DIRECTIONAL CURB RAMP SHALL HAVE A CONTINUOUS LONGITUDINAL SLOPE MORE THAN 5% AND LESS THAN 8.3%. THE RAMP SHALL ALSO HAVE A CROSS SLOPE OF NO MORE THAN 2.0%. LENGTH OF RAMP CAN VARY, BUT SHALL NOT EXCEED 15 FEET TO ACHIEVE DESIRED ELEVATION CHANGE.

(R 1 ALSO KNOWN AS "TURNING SPACE" PER ADA PROWAG, A MINIMUM LANDING SPACE OF 5 FOOT BY 5 FOOT SHALL BE AT THE TOP OF EVERY RAMP. THIS LANDING (TURNING) SPACE SHALL HAVE A CROSS SLOPE IN BOTH DIRECTIONS THAT DOES NOT EXCEED 2.0%. LANDING MUST MATCH WIDTH OF SIDEWALK AND LENGTH SHALL BE THE SAME DISTANCE ("SQUARED" LANDING).

© ALL CURB RAMPS SHALL HAVE GRADE BREAKS AT THE TOP AND BOTTOM THAT ARE PERPENDICULAR TO THE DIRECTION OF THE RAMP RUN. WHERE THE ENDS OF THE BOTTOM GRADE BREAK ARE LESS THAN OR EQUAL TO 5 FEET, THE DWD SHALL BE PLACED WITHIN THE RAMP AT THE BOTTOM GRADE BREAK. WHERE EITHER END OF THE BOTTOM GRADE BREAK IS GREATER THAN 5 FEET, THE DWD SHALL BE PLACED BEHIND THE BACK OF THE CURB.

® PAVING CONTIRACTOR SHALL LEAVE BLOCK OUT WITH A KEYWAY JOINT INSTALLED, MINIMUM OF 18 INCHES MEASURED FROM BACK OF CURB. BLOCK OUT SHALL BE POURED MONOLITHICALLY WITH CURB RAMP. CONCRETE SHALL TIE TO STIREET PAVING WITH A KEYWAY JOINT PER CITY DETAIL 2O5OM. NO CURB SHALL BE CONSTIRUCTED WHERE A DWD IS PROVIDED. THE CURB ON EITHER SIDE SHALL HAVE A TYPICAL 5 FOOT TAPER TO TIRANSITION FROM THE STANDARD 6-INCH CURB HEIGHT TO BE FLUSH WITH RAMP.

□ ALL WORK ASSOCIATED WITH ACCESSIBLE ROUTES SHALL BE INSTALLED FLUSH WITH ALL FEATURES TO MINIMIZE VERTICAL SURFACE
□ DISCONTINUITIES. EACH SEGMENT ALONG ACCESSIBLE ROUTE SHALL BE FLUSH WITH NO MORE (ZERO TOLERANCE) THAN A ¼ INCH GRADE SEPARATION (ELEVATION DIFFERENCE), OR ½ INCH GRADE SEPARATION IF BEVELED (BEVEL SLOPE SHALL NOT BE STEEPER THAN 50%).

® A SIDEWALK HEADER SHALL BE CONSTIRUCTED AT ENDS OF ALL WORK PERFORMED.

ri1 STIREET CROSSINGS SHALL ADHERE TO SAME GUIDELINES AS OTHER ACCESSIBLE ROUTES WITHIN PUBLIC RIGHT-OF-WAY, AND SHALL BE FOR
□ THE FULL WIDTH OF THE IN LINE ACCESSIBLE ROUTE. CROSS SLOPE SHALL NOT EXCEED 2%*. NEW STIREET CONSTIRUCTION SHALL INCORPORATE ALL ADA DESIGN REQUIREMENTS. IT SHALL BE THE RESPONSIBILITY OF THE DESIGN PROFESSIONAL AND CONTIRACTOR TO ENSURE ALL STIREET CROSSINGS MEET THE REQUIREMENTS OF PROWAG. STIREET ALTERATIONS ON EXISTING STIREETS TO BRING TO COMPLIANCE SHALL BE AT THE CITY ENGINEER'S DISCRETION.

0 ALL CURBS CONSTIRUCTED AS PART OF AN ADA RAMP SHALL MATCH CITY CURB STANDARDS.

*SEE PROWAG SPECIAL DESIGN CONSIDERA noNS WHEN STREET CROSSING HAS NO STOP OR YIELD CONDtnON.

DETECTABLE WARNING DEVICE

1. CURB RAMPS MUST CONTAIN A DETECTABLE WARNING SURFACE THAT CONSISTS OF RAISED TRUNCATED DOMES COMPLYING WITH SECTION 705 OF THE TAS. THE SURFACE MUST CONTRAST VISUALLY WITH ADJOINING SURFACES. FURNISH AND INSTALL AN APPROVED CAST-IN-PLACE DARK RED DETECTABLE WARNING SURFACE MATERIAL ADJACENT TO UNCOLORED CONCRETE, UNLESS SPECIFIED ELSEWHERE IN THE PLANS.
2. DETECTABLE WARNING MATERIALS MUST MEET CITY OF ANNA MATERIAL SPECIFICATION (REFER TO TXDOT APPROVED VENDOR LIST) AND BE LISTED ON THE MATERIAL PRODUCER LIST. INSTALL PRODUCTS IN ACCORDANCE WITH MANUFACTURER'S SPECIFICATIONS.
3. DETECTABLE WARNING SURFACES MUST BE SLIP RESISTANT AND NOT ALLOW WATER TO ACCUMULATE.
4. DETECTABLE WARNING SURFACES SHALL BE A MINIMUM OF 24" IN DEPTH IN THE DIRECTION OF PEDESTRIAN TRAVEL, AND EXTEND THE FULL WIDTH OF THE CURB RAMP OR LANDING WHERE THE PEDESTRIAN ACCESS ROUTE ENTERS THE STREET.
5. DETECTABLE WARNING SURFACES SHALL BE LOCATED SO THAT THE EDGE NEAREST THE CURB LINE IS AT THE BACK OF CURB. WHEN PLACED ON THE RAMP, ALIGN THE ROWS OF DOMES TO BE PERPENDICULAR TO THE GRADE BREAK BETWEEN THE RAMP RUN AND THE STREET. WHERE DETECTABLE WARNING SURFACES ARE PROVIDED ON A SURFACE WITH A SLOPE THAT IS LESS THAN 5 PERCENT, DOME ORIENTATION IS LESS CRITICAL. DETECTABLE WARNING SURFACES MAY BE CURVED ALONG THE CORNER RADIUS.

SIDEWALKS

6. PROVIDE CLEAR GROUND SPACE AT OPERABLE PARTS, INCLUDING PEDESTRIAN PUSH BUTTONS.OPERABLE PARTS SHALL BE PLACED WITHIN ONE OR MORE REACH RANGES SPECIFIED IN TAS 308.
7. PLACE TRAFFIC SIGNAL OR ILLUMINATION POLES, GROUND BOXES, CONTROLLER BOXES, SIGNS, DRAINAGE FACILITIES AND OTHER ITEMS SO AS NOT TO OBSTRUCT THE PEDESTRIAN ACCESS ROUTE OR CLEAR GROUND SPACE.
8. STREET GRADES AND CROSS SLOPES SHALL BE AS SHOWN ELSEWHERE IN THE PLANS.
9. CHANGES IN LEVEL GREATER THAN 1/4 INCH ARE NOT PERMITTED (1/2 INCH WITH BEVEL).
10. WHERE A 5' SIDEWALK IS PROVIDED, A 5'X 5' PASSING AREAS ARE REQUIRED AT INTERVALS NOT TO EXCEED 200'.
11. THE LEAST POSSIBLE GRADE SHOULD BE USED TO MAXIMIZE ACCESSIBILITY. THE RUNNING SLOPE OF SIDEWALKS AND CROSSWALKS WITHIN THE PUBLIC RIGHT OF WAY MAY FOLLOW THE GRADE OF THE PARALLEL ROADWAY. WHERE A CONTINUOUS GRADE GREATER THAN 5% MUST BE PROVIDED, HANDRAILS MAY BE DESIRABLE TO IMPROVE ACCESSIBILITY. HANDRAILS MAY ALSO BE NEEDED TO PROTECT PEDESTRIANS FROM POTENTIALLY HAZARDOUS CONDITIONS. IF PROVIDED, HANDRAILS SHALL COMPLY WITH TAS 505.
12. HANDRAIL EXTENSIONS SHALL NOT PROTRUDE INTO THE USABLE LANDING AREA OR INTO INTERSECTING PEDESTRIAN ROUTES.

THE CITY OF Anna	BARRIER FREE RAMP TYPE 'B' (2 OF 2)	REV DATE: DECEMBER 2020 STANDARD DRAWING NO. PAV-11A

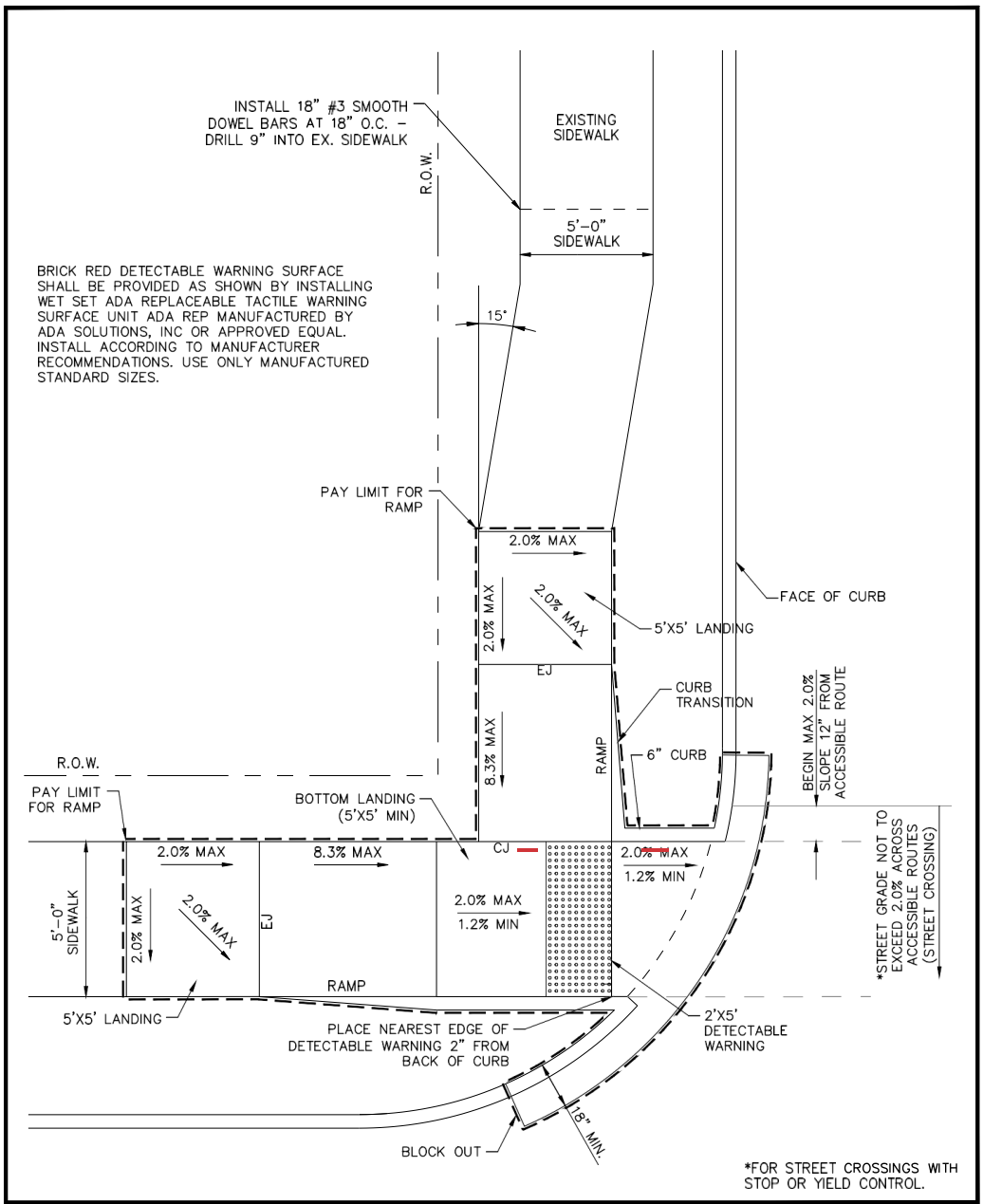

THE CITY OF Anna	~~BARRIER FREE RAMP~~	REV DATE:DECEMBER 2020
	~~TYPE 'C'~~	STANDARD DRAWING NO. ~~PAV-12~~

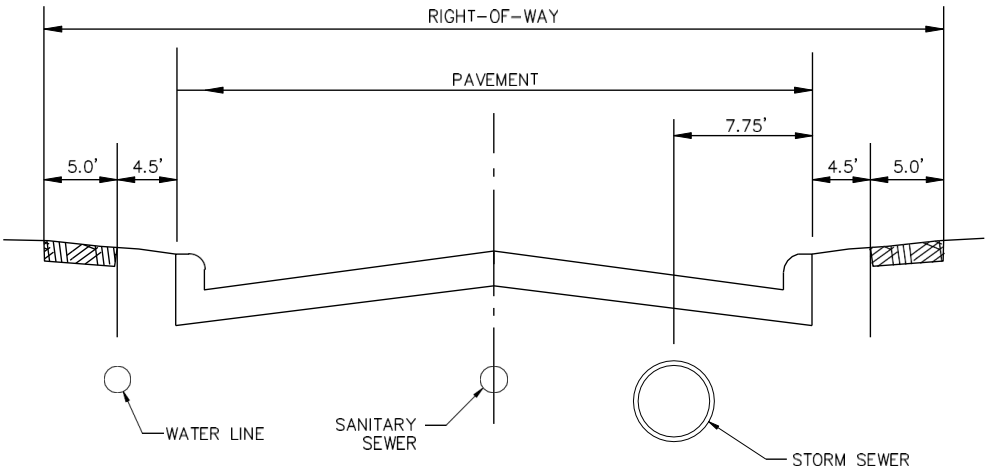

THE CITY OF Anna	~~TYPICAL UTILITY LOCATION~~ ~~IN PAVEMENT~~	REV. DATE: DECEMBER 2020 STANDARD DRAWING NO. ~~PAV-13~~

NOTE:

IN UNPAVED AREAS, INSTALL 2' x 2' x 6" CONCRETE VALVE PAD FLUSH WITH THE TOP OF VALVE BOX. REINFORCE WITH #3 BARS ON 6" CENTERS BOTH WAYS. CONCRETE SHALL BE IN ACCORDANCE WITH 5TH EDITION NCTCOG STANDARD SPECIFICATIONS ITEM 303 AND DELIVERED TO SITE BY TRUCK MIXER. NO SAC-CRETE WILL BE ALLOWED.

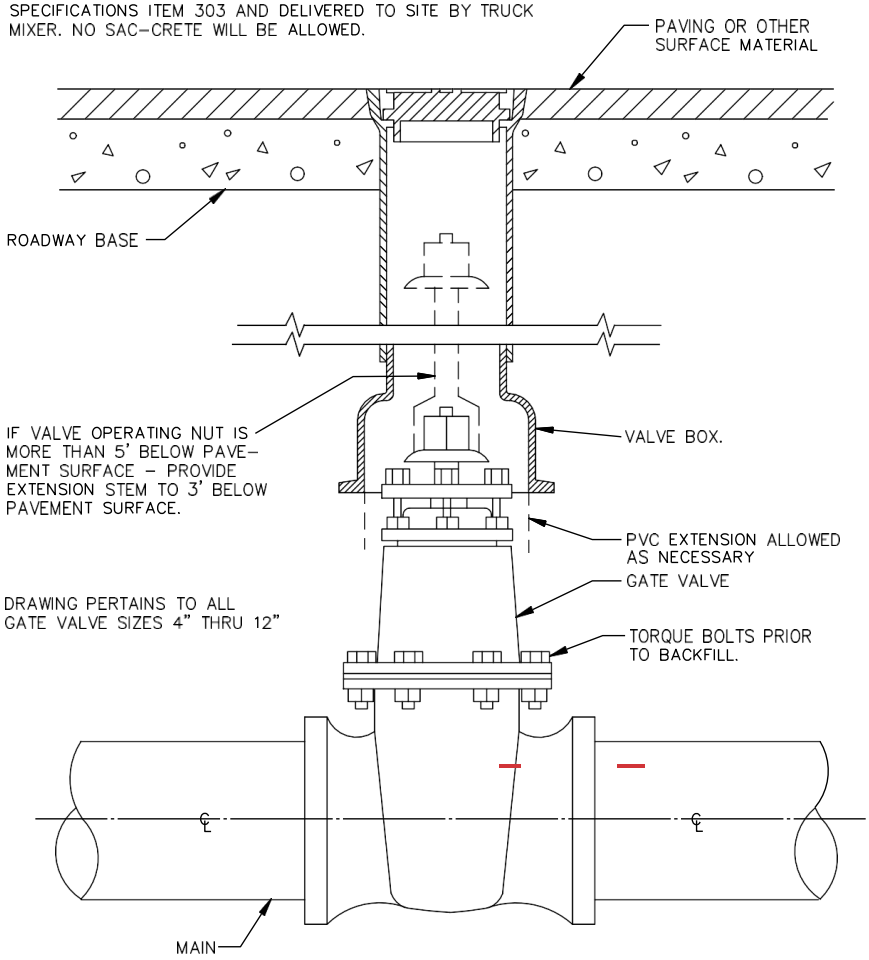

GATE VALVE BOX AND EXTENSION STEM

N.T.S.

THE CITY OF Anna	~~GATE VALVE 4" TO 12"~~	REV. DATE: AUGUST 2020
	~~BOX & EXTENSION STEM~~	STANDARD DRAWING NO. ~~WAT-01~~

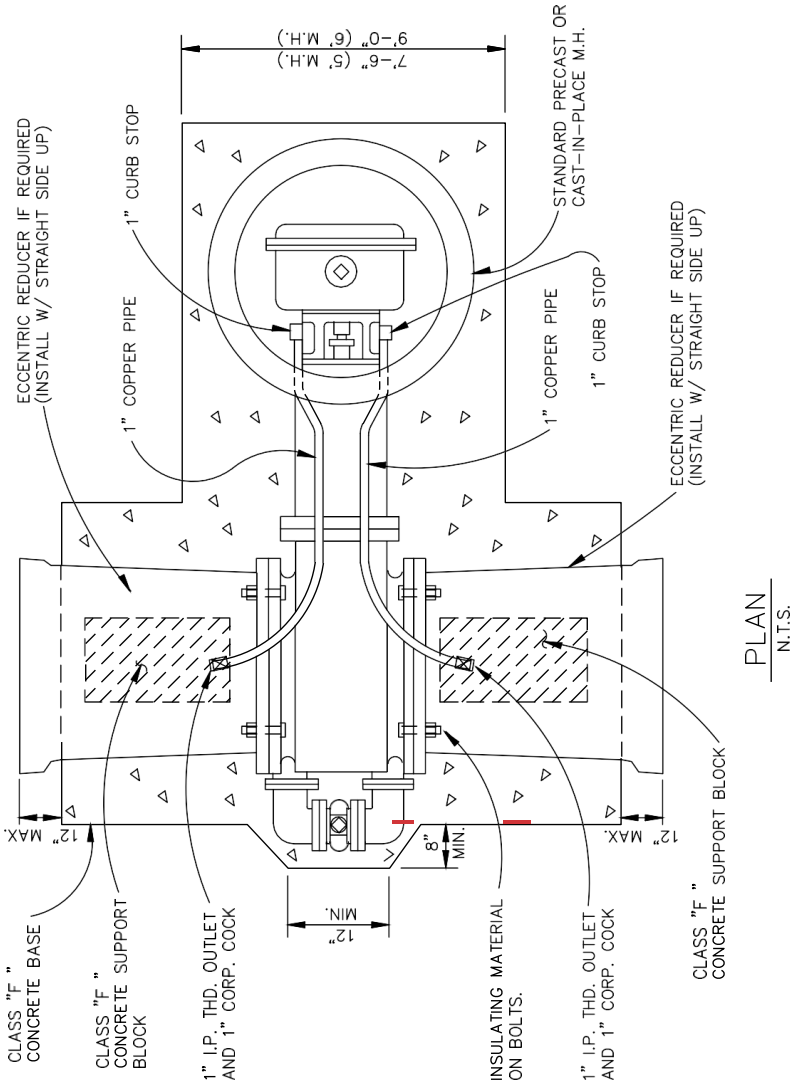

PLAN
N.T.S.

THE CITY OF Anna	~~VAULT CONSTRUCTION PLAN~~ ~~HORIZONTAL GATE VALVE ≥ 16"~~	REV DATE: MARCH 2020 STANDARD DRAWING NO. ~~WAT-02~~

THE CITY OF Anna

VAULT CONSTRUCTION PROFILE

HORIZONTAL GATE VALVE ≥ 16"

WAT-03

STANDARD DRAWING NO.

REV DATE: MARCH 2020

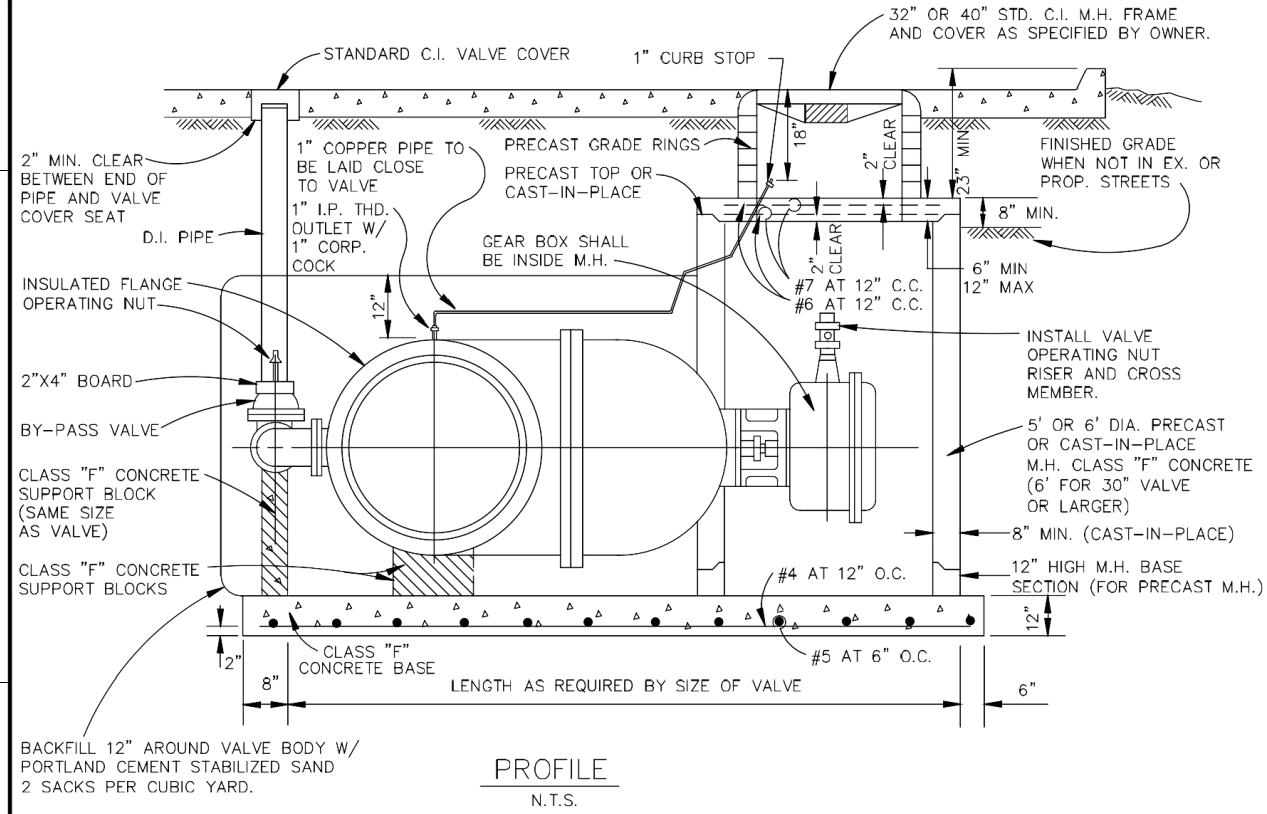

PROFILE

N.T.S.

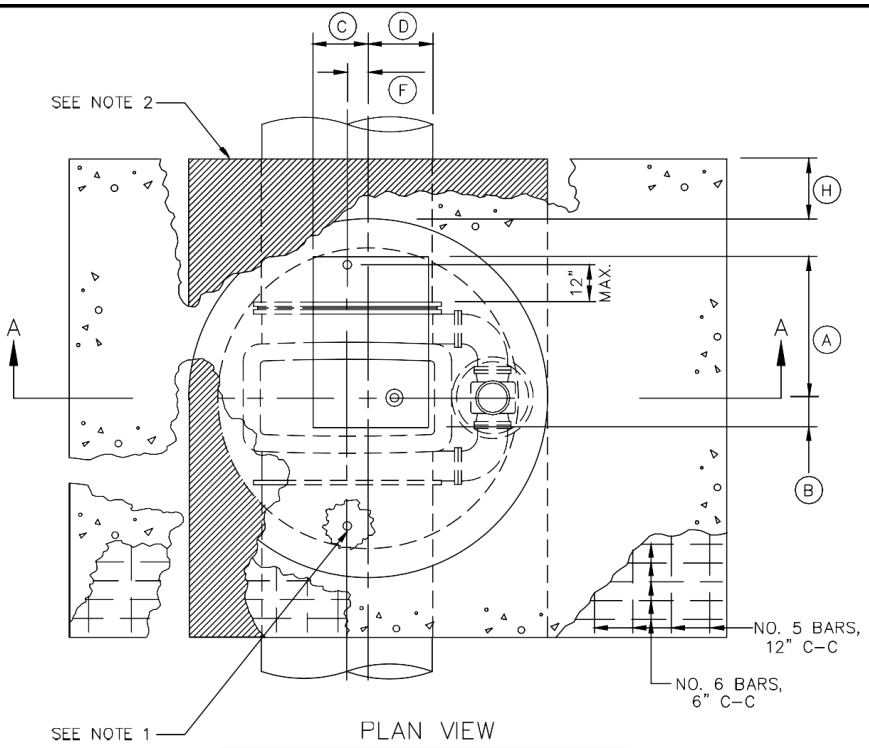

PLAN VIEW

(LESS MANHOLE FRAME & COVER INSTALLATION)
N.T.S.

GATE VALVE SIZE	DIMENSION TABLE											
	A	B	C	D	E	F	G	H	J	K	L	M
16"	20"	20"	12"	12"	44 1/2"	1"	48"	12"	10"	24"	12"	16"
18"	20"	20"	12"	12"	51 3/8"	2"	48"	12"	12"	24"	12"	18"
20"	22"	18"	12"	12"	56 5/8"	1"	54"	12"	12"	24"	16"	20"
24"	26"	14"	12"	12"	64 3/8"	1"	60"	18"	14"	30"	18"	24"
30"	28"	12"	12"	12"	80 5/8"	3"	66"	18"	18"	30"	20"	30"
36"	32"	8"	12"	12"	90 1/16"	4"	72"	18"	18"	36"	24"	36"
42"	34"	6"	15"	9"	107 3/4"	5"	78"	24"	20"	36"	30"	42"
48"	36"	4"	14"	10"	121 5/8"	4"	90"	24"	26"	42"	36"	48"
54"	36"	4"	9"	15"	142 1/2"	3"	102"	24"	32"	46"	40"	54"

NOTES:
1. PROVIDE CORPORATION AND CURB STOPS A MAXIMUM OF 12" FROM EACH END OF GATE VALVE, AS SHOWN. CORPORATION AND CURB STOP SIZES SHALL BE 1" FOR 16", 20", AND 24" NOMINAL PIPE DIAMETERS; 2" FOR 30" AND LARGER DIAMETERS. 2" TAPS SHALL BE MADE AS A 2" FLANGED OUTLET WITH INSULATED ADAPTOR KIT. COPPER RISERS SHALL BE PROVIDED BETWEEN THE CORPORATION AND CURB STOPS. CURB STOPS SHALL BE INSTALLED AT AN ELEVATION 12" ABOVE THE TOP SURFACE OF VAULT BOTTOM SLAB.
2. POLYURETHANE CUSHION PAD.

THE CITY OF Anna

~~VAULT CONSTRUCTION DIMENSIONS~~

~~VERTICAL GATE VALVE ≥ 16"~~

REV DATE: MARCH 2020

STANDARD DRAWING NO.

~~WAT-04~~

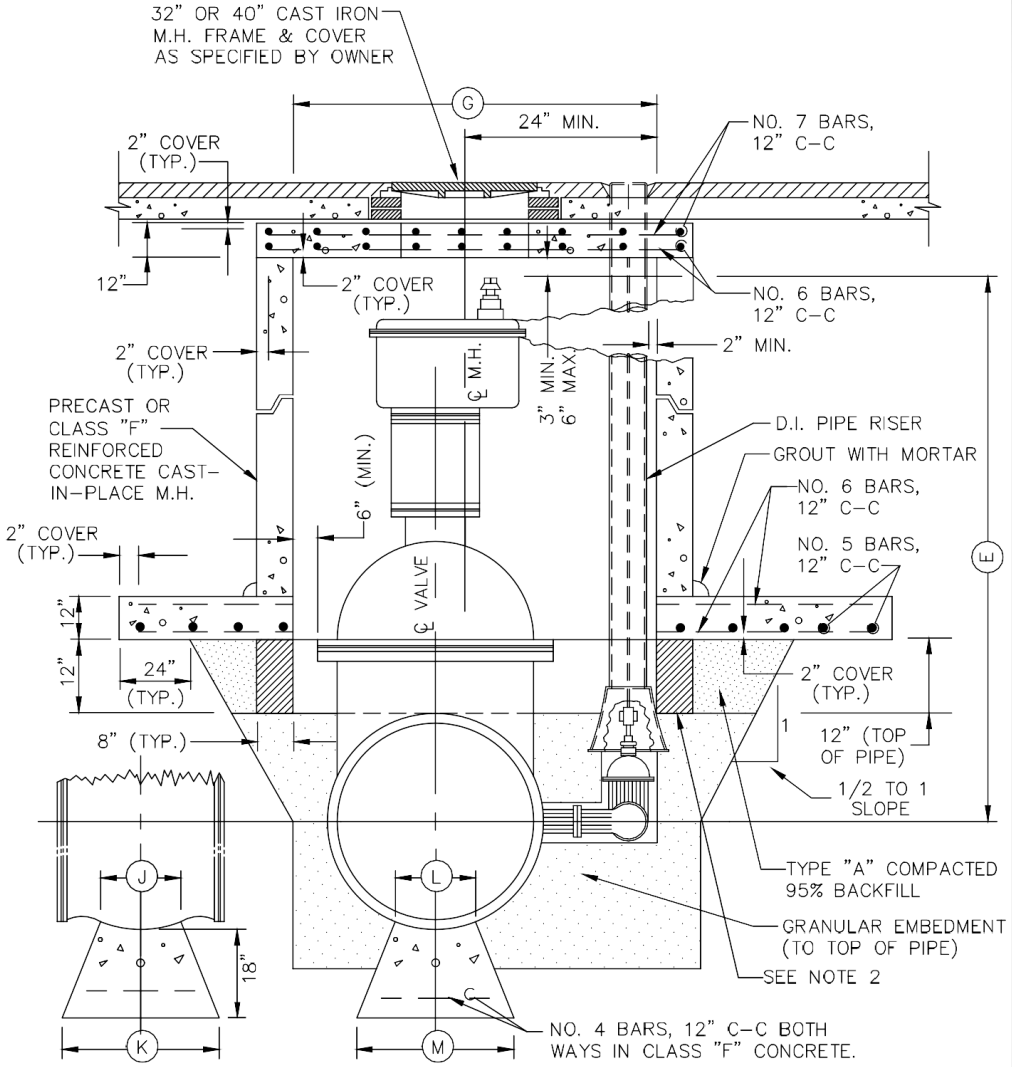

SECTION "A–A"

REFER TO STD. DWG. WAT–04 FOR DIMENSION TABLE AND GENERAL NOTES.

THE CITY OF Anna	~~VAULT CONSTRUCTION SECTION~~	REV DATE: MARCH 2020
	~~VERTICAL GATE VALVE ≥ 16"~~	STANDARD DRAWING NO. ~~WAT-05~~

THE CITY OF Anna

VAULT CONSTRUCTION PLAN

BUTTERFLY VALVE ≥ 16"

WAT-06

STANDARD DRAWING NO.

REV. DATE: MARCH 2020

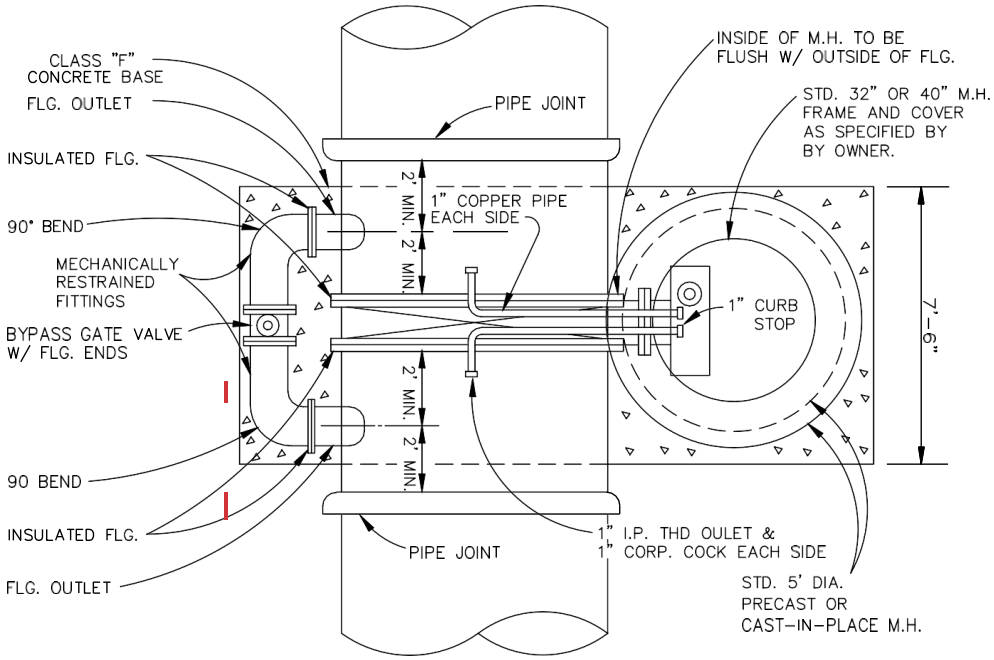

PLAN

N.T.S.

THE CITY OF Anna

VAULT CONSTRUCTION PROFILE

BUTTERFLY VALVE ≥ 16"

WAT-07

STANDARD DRAWING NO.

REV DATE: MARCH 2020

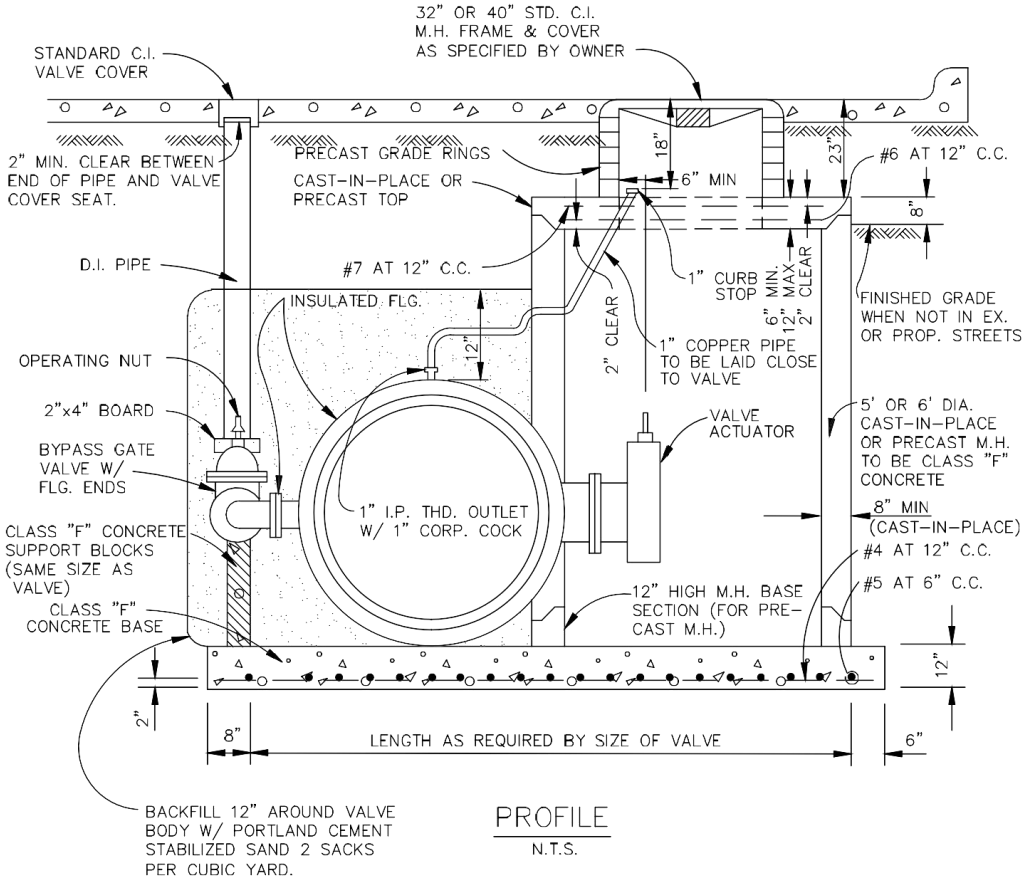

PROFILE

N.T.S.

THE CITY OF Anna

COMBINATION AIR VACUUM VALVE

TYPE "1"

WAT-08

STANDARD DRAWING NO.

REV. DATE: MARCH 2020

AIR VALVE	BRASS WHEEL VALVE	VENT PIPE
2"	2"	2"

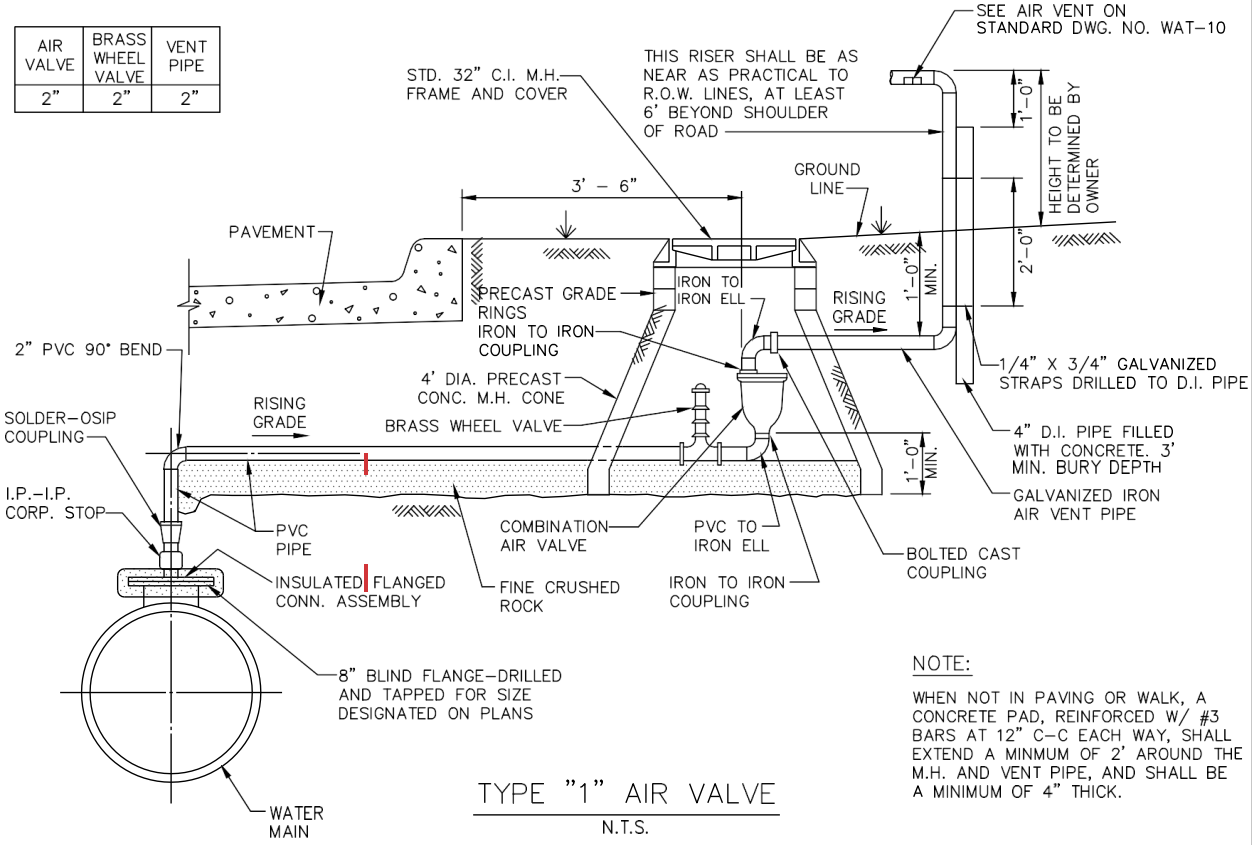

TYPE "1" AIR VALVE

N.T.S.

NOTE:

WHEN NOT IN PAVING OR WALK, A CONCRETE PAD, REINFORCED W/ #3 BARS AT 12" C-C EACH WAY, SHALL EXTEND A MINMUM OF 2' AROUND THE M.H. AND VENT PIPE, AND SHALL BE A MINIMUM OF 4" THICK.

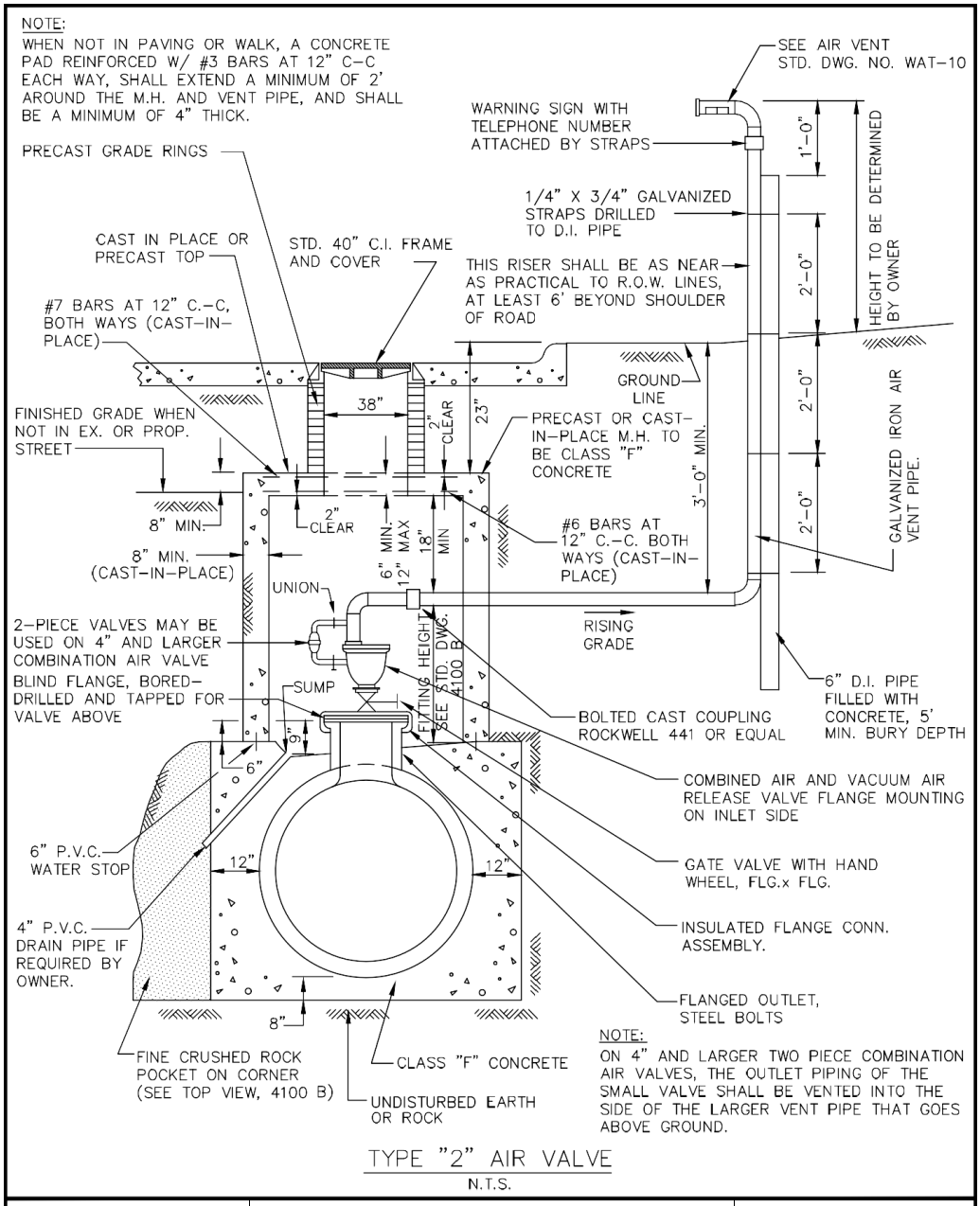

TYPE "2" AIR VALVE

N.T.S.

THE CITY OF Anna	~~COMBINATION AIR VACUUM VALVE~~	REV DATE: MARCH 2020
	~~TYPE "2" SECTION~~	STANDARD DRAWING NO. ~~WAT-09~~

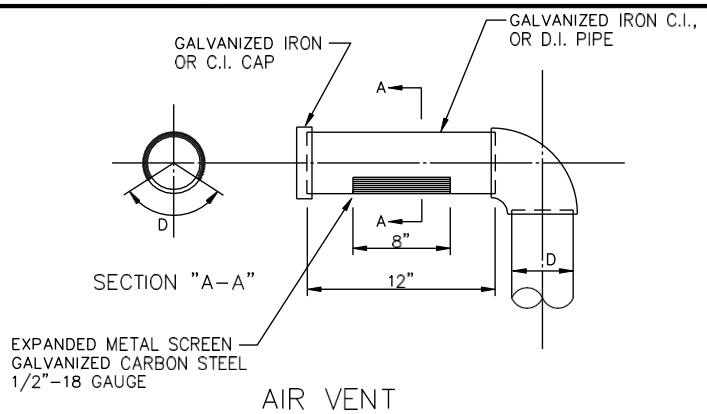

AIR VENT

N.T.S.

AIR VALVE	GATE VALVE	FLG. OUTLET	MIN. FITTING HEIGHT	VENT PIPE D	M.H. DIA.
2"	2"	8"	26"	2"	5'
3"	3"	18"	31"	3"	5'
4"	4"	18"	38"	4"	5'
6"	6"	18"	46"	6"	5'
8"	8"	18"	53"	8"	6'
10"	10"	20"	62"	10"	6'
12"	12"	24"	72"	12"	6'

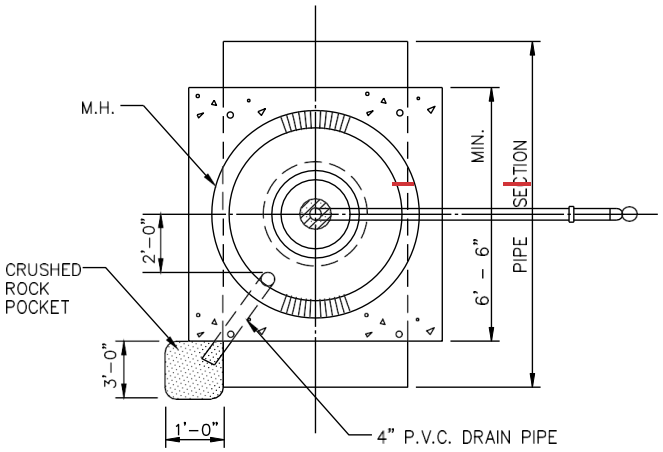

PLAN VIEW

N.T.S.

THE CITY OF Anna	~~AIR RELEASE VALVE AIR VENT~~	REV DATE:MARCH 2020
	~~TYPE "2"~~	STANDARD DRAWING NO. ~~WAT-10~~

THE CITY OF Anna

FLUSH POINT INSTALLATION

TYPE "1"

WAT-11

STANDARD DRAWING NO.

REV. DATE: AUGUST 2020

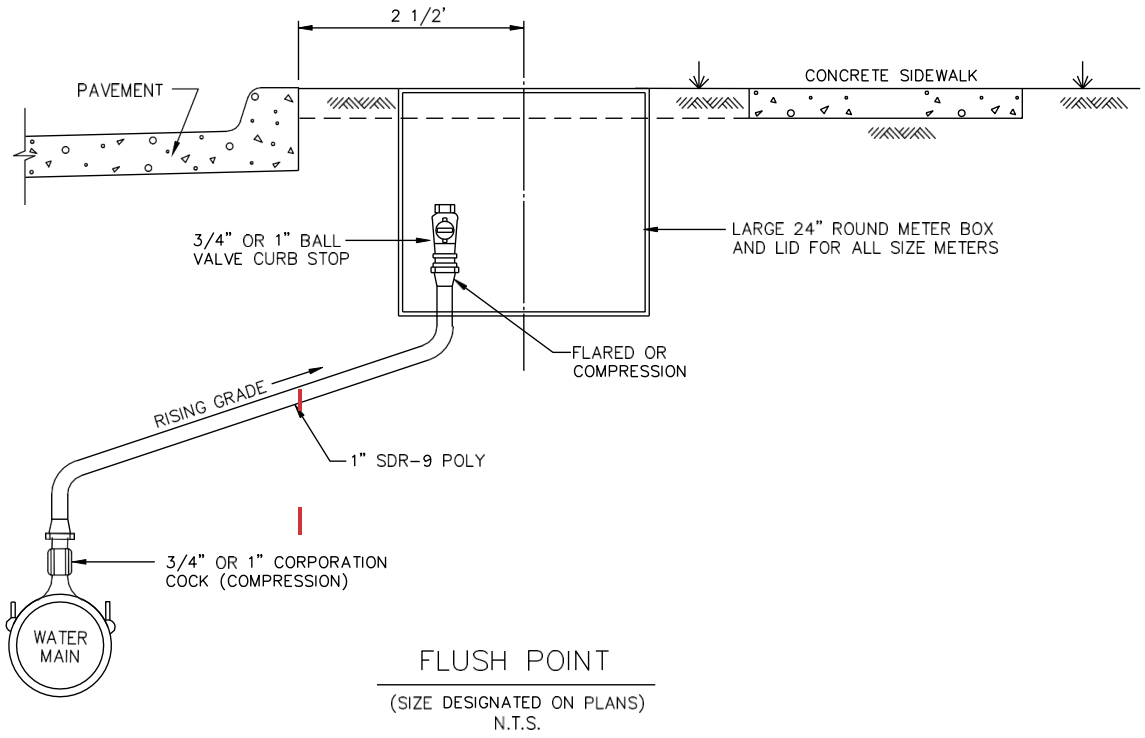

FLUSH POINT

(SIZE DESIGNATED ON PLANS)
N.T.S.

THE CITY OF Anna

FIRE HYDRANT INSTALLATION

REV DATE: AUGUST 2020

STANDARD DRAWING NO. WAT-12

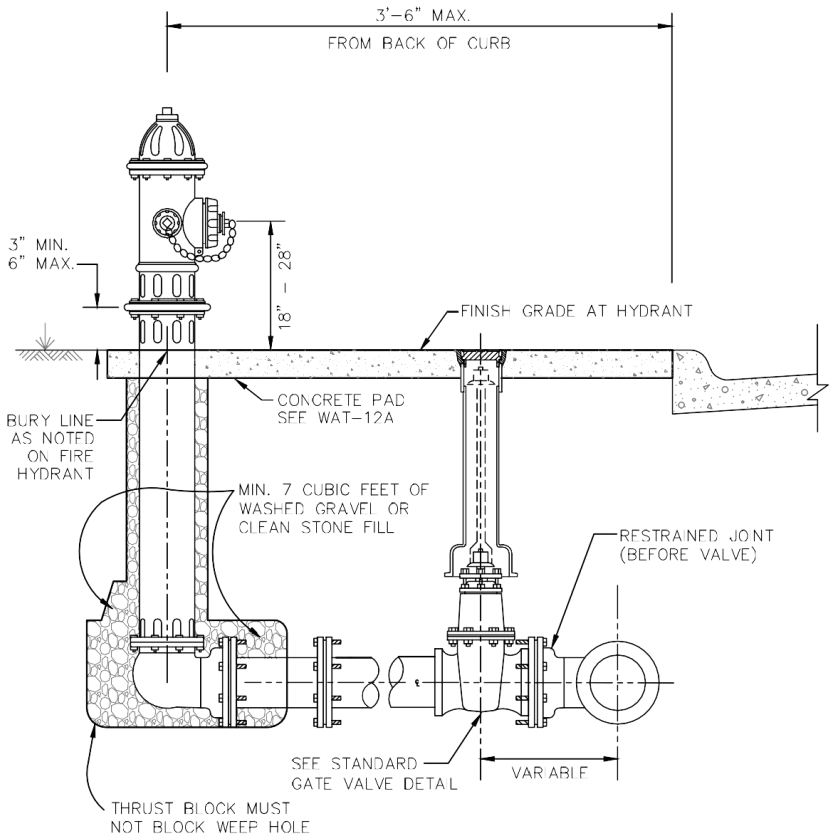

NOTES:

1. IN GENERAL, ALL FIRE HYDRANTS SHALL CONFORM TO AWWA STANDARD SPECIFICATIONS FOR FIRE HYDRANTS FOR ORDINARY WATER WORKS SERVICE, C-502. FIRE HYDRANTS SHALL HAVE A 5 1/4" MIN. VALVE OPENING AND A BARREL APPROXIMATELY 7" INSIDE DIAMETER. ALL HYDRANTS SHALL BE EQUIPPED WITH A BREAKAWAY FLANGE.
2. ALL JOINTS SHALL BE MECHANICAL JOINTS.
3. TYPICAL VALVE: ACTUAL VALVE LOCATION WILL DEPEND ON LOCATION OF WATER MAIN.
4. F.H. NO CLOSER THAN 18" TO EXISTING OR PROPOSED SIDEWALKS. (USUAL)
5. STANDARD BURY DEPTH 5' FEET.
6. SET FIRE HYDRANT ON THE LOT LINE EXTENDED WHEN POSSIBLE.
7. F.H. SHALL BE LOCATED MINIMUM 1 FT. OUTSIDE OF THE AREA BETWEEN THE P.C.'S OF THE CORNER TURNING RADII AT INTERSECTIONS. (SEE PLAN VIEW ON WAT-12A)
8. NO MORE THAN 2 EXTENSIONS SHALL BE PERMITTED.

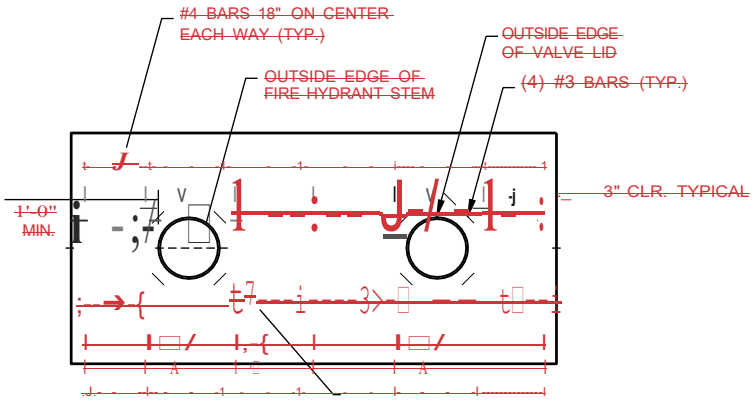

PLAN VIEW - REBAR
N.T.S.

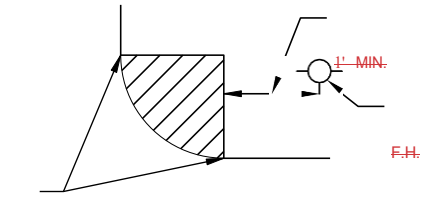

PLAN VIEW - PLACEMENT
N.T.S.

THE CITY OF Anna

FIRE HYDRANT

REV DATE:MARCH 2020

STANDARD DRAWING NO.

~~REBAR & PLACEMENT~~ ~~WAT-12A~~

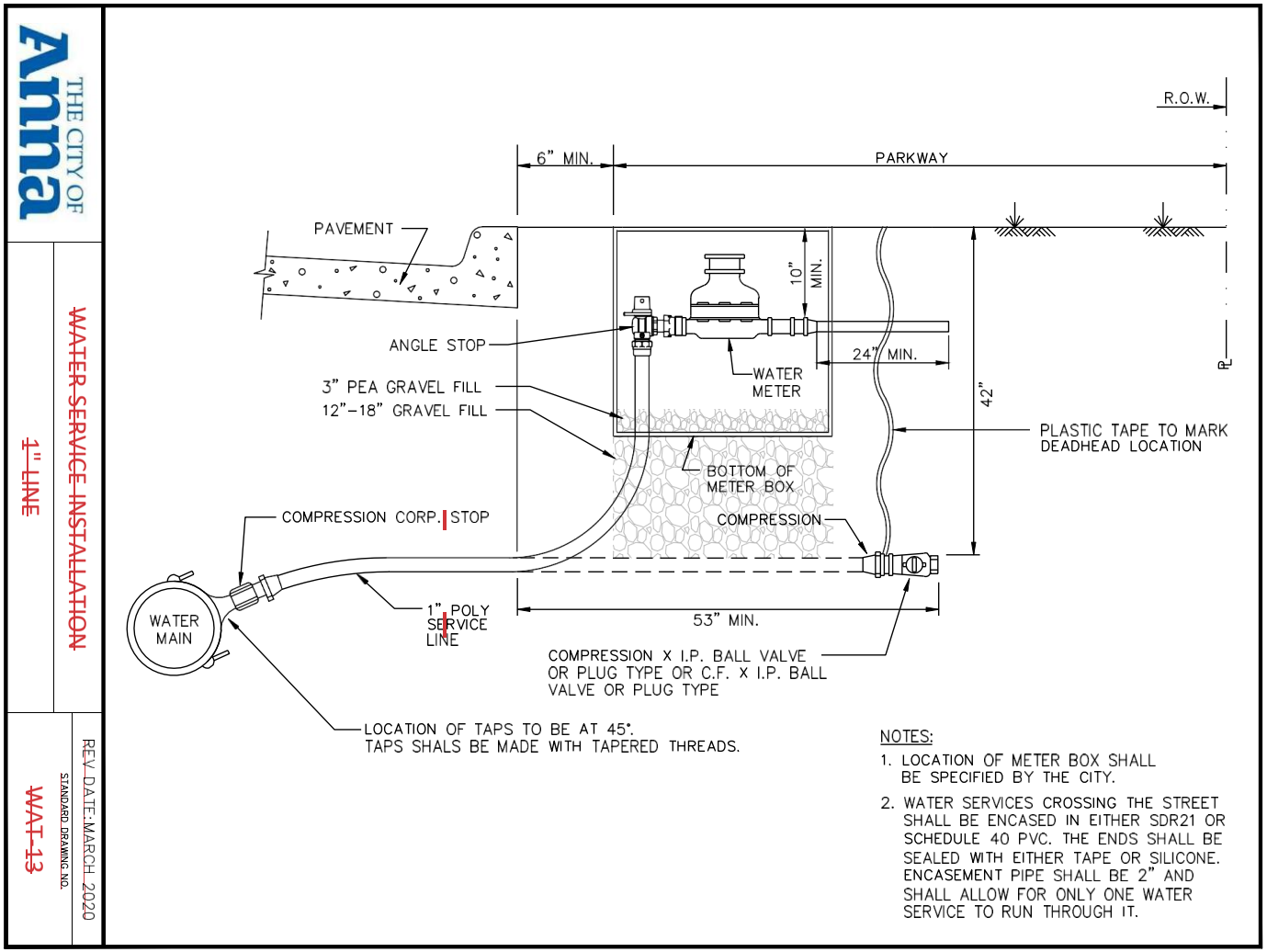
THE CITY OF Anna
1" LINE
WATER SERVICE INSTALLATION
WAT-13
STANDARD DRAWING NO.
REV. DATE: MARCH 2020
R.O.W.
6" MIN.
PARKWAY
PAVEMENT
10" MIN.
ANGLE STOP
24" MIN.
WATER METER
3" PEA GRAVEL FILL
12"-18" GRAVEL FILL
42"
PLASTIC TAPE TO MARK DEADHEAD LOCATION
BOTTOM OF METER BOX
COMPRESSION CORP. STOP
COMPRESSION
WATER MAIN
1" POLY SERVICE LINE
53" MIN.
COMPRESSION X I.P. BALL VALVE OR PLUG TYPE OR C.F. X I.P. BALL VALVE OR PLUG TYPE
LOCATION OF TAPS TO BE AT 45°. TAPS SHALS BE MADE WITH TAPERED THREADS.
NOTES:
1. LOCATION OF METER BOX SHALL BE SPECIFIED BY THE CITY.
2. WATER SERVICES CROSSING THE STREET SHALL BE ENCASED IN EITHER SDR21 OR SCHEDULE 40 PVC. THE ENDS SHALL BE SEALED WITH EITHER TAPE OR SILICONE. ENCASEMENT PIPE SHALL BE 2" AND SHALL ALLOW FOR ONLY ONE WATER SERVICE TO RUN THROUGH IT.

THE CITY OF Anna

WATER SERVICE INSTALLATION

1-1/2" OR 2" LINE

WAT-14

STANDARD DRAWING NO.

REV. DATE: AUGUST 2020

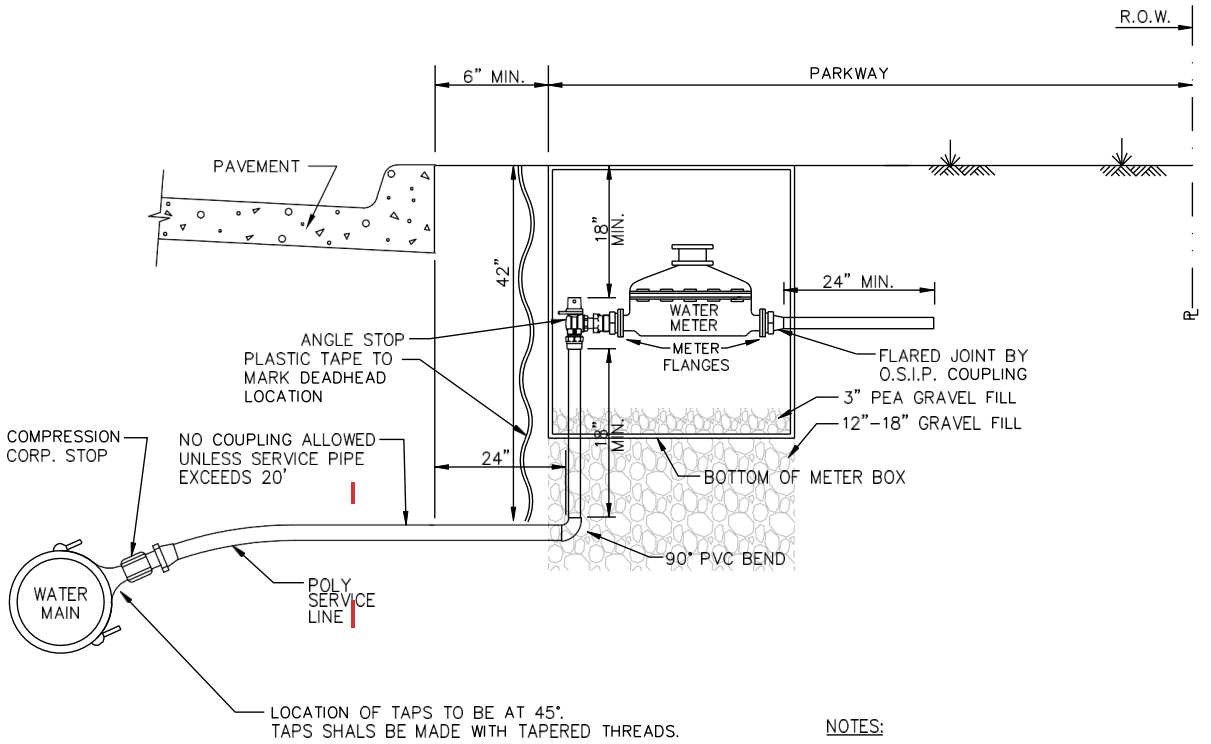

THE CITY OF Anna

4" COMBINATION WATER SERVICE WITH 4" METER

STANDARD DRAWING NO. WAT-15

REV DATE: MARCH 2020

MATERIALS LIST		
PART NO.	QUANTITY	DESCRIPTION
①	2 EA.	4" X 12" D.I. NIPPLE M.J. X F.
②	2 EA.	4" X 4" D.I. TEE F. X F.
③	2 EA.	4" GATE VALVE F. X F.
④	3 EA.	VALVE STACK RISER COVER & LID
⑤	1 EA.	4" X 40" D.I. NIPPLE F. X SLEEVE
⑥	1 EA.	4" FLANGED COUPLING ADAPTER
⑦	1 EA.	4" METER AS SPECIFIED (TYPE F.M. SHOWN)
⑧	1 EA.	4" X 4" D.I. TEE F. X F. (TEST POINT)
⑨	1 EA.	4" BLIND FLG.

MATERIALS LIST		
PART NO.	QUANTITY	DESCRIPTION
⑩	1 EA.	4" X 24" D.I. NIPPLE F. X F.
⑪	2 EA.	4" X 36" D.I. NIPPLE F. X F.
⑫	1 EA.	4" D.I. 90° BEND F. X F.
⑬	1 EA.	4" GATE VALVE F. X M.J.
⑭	1 EA.	4" D.I. 90° BEND M.J. X F.
⑮	1 EA.	4" D.I. PIPE, CLASS 52, APPROX. 10'
⑯	1 EA.	PRECAST METER VAULT
	1 EA.	VAULT FLOOR (NOT SHOWN)
	1 EA.	ACCESS HATCH (NOT SHOWN)
⑰	1 EA.	BY-PASS METER

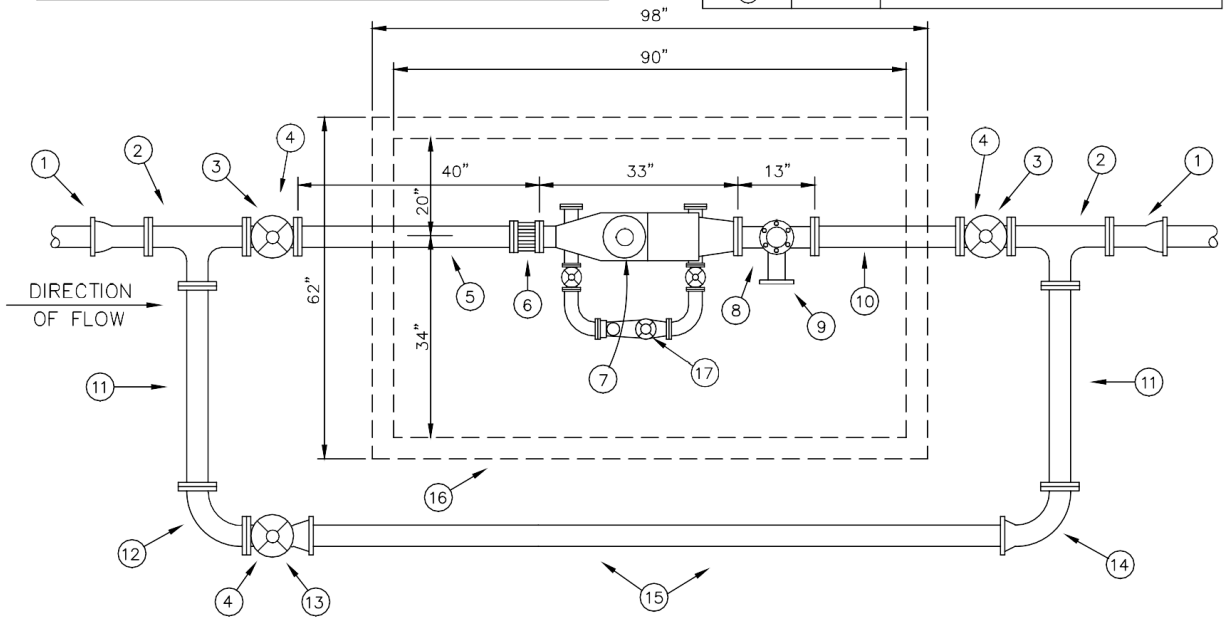

THE CITY OF Anna

ENCASEMENT PIPE

WATER LINE BY BORE

REV. DATE: MARCH 2020

STANDARD DRAWING NO.

WAT-16

NOTE:
PROVIDE THREE (3) CASING SPACERS PER JOINT OF PIPE

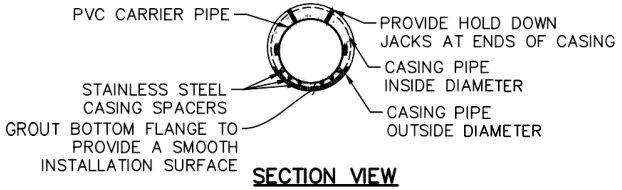

SECTION VIEW

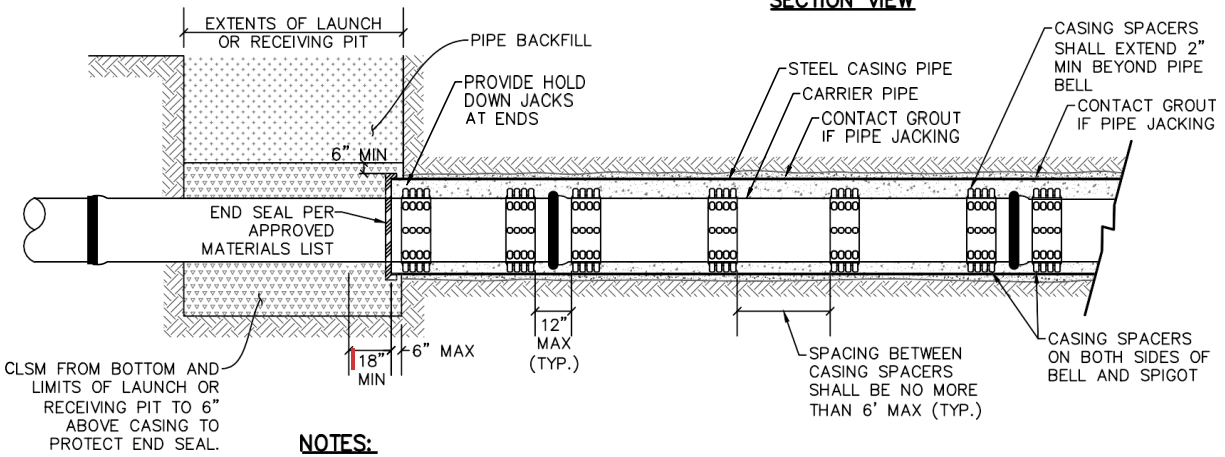

NOTES:

1. PIPE SHALL HAVE UNIFORM ALIGNMENT AND BEARING WHEN INSTALLED AS A CARRIER PIPE IN CASING PIPE. TO PROVIDE STRAIGHT ALIGNMENT AND GRADE, CONCRETE PAVING MAY BE REQUIRED.
2. PRESSURE GROUT SPACE OUTSIDE OF CASING PIPE AFTER TUNNEL IS INSTALLED.
3. WHERE A BORE PIT EXCEEDS 5 FEET IN DEPTH, THE CONTRACTOR SHALL INSTALL SHORING OF THE PIT WALLS AS REQUIRED BY OSHA.
4. FOR BELL AND SPIGOT PIPE, REMOVE ALL SLACK IN LINE PRIOR TO BACKFILL AND PRESSURE TESTING.
5. CASING SPACERS SHALL FIT SNUG OVER THE CARRIER PIPE AND POSITION THE CARRIER PIPE APPROXIMATELY IN THE CENTER OF THE CASING PIPE TO PROVIDE ADEQUATE CLEARANCE BETWEEN THE CARRIER PIPE BELL AND THE CASING PIPE. CASING SPACERS SHALL BE STAINLESS STEEL FOR WATER PIPE.
6. CASING PIPE SHALL BE 1.5 TIMES LARGER THAN THE CARRIER PIPE.

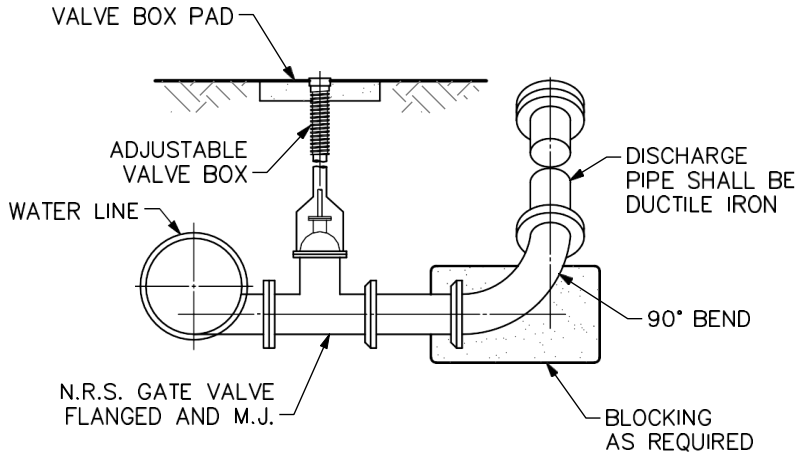

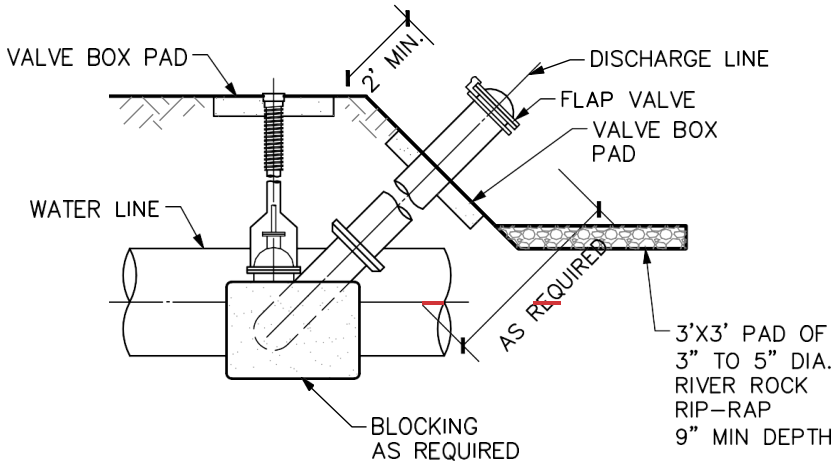

NOTE:

1. MUST BE DISCHARGED INTO STORM SEWER, BRIDGE OR CULVERT.

THE CITY OF Anna	~~BLOW OFF VALVE~~ INSTALLATION	REV DATE: MARCH 2020 STANDARD DRAWING NO. ~~WAT-17~~

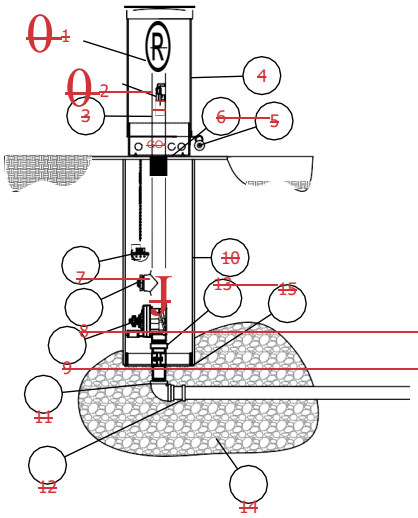

ITEM	ITEM / DESCRIPTION	OPTIONAL	BY OTHERS
	2" W/WATER FLD'VI RESTRICTDR		
	SAMPLING POINT		
	2" PVC PIPE		
	UV RESISTANT LOCKABLE DOME ENCLOSURE		
	LOCKING POINT		
	REMOVABLE ACCESS PLATE		
	CONTROLLER		
	AUTDMATIC DRAIN		
	2" AUTDMATIC VALVE		
	SDR 35 SEWER PIPE		
	2" SS MIP INLET	X	X
2	MIP X COMPRESSION ADAPTER		
		§	
13	O-RING CONNECTOR		
14	1' CLEAN ROCK		
15	DEBRIS PLATE		

N

1 OTES:

AUTOMATIC FLUSHING DEVICE SHALL HAVE A 2" TAINLESS STEEL MIP INLET, THAT WILL LEAD VERTICALLY TO THE BOTTOM INTO A 2" UTOMATIC FLUSHING VALVE.

2. THE FLUSHING VALVE SHALL CONTROL THE FLOW OF WATER THROUGH THE HYDRANT AND ITS DIAPHRAGM WITH THE EXTENSION AND RETRACTION OF A DC LATCHING SOLENOID AND HAVE A 220 PSI RATING.
3. EACH UNIT SHALL BE FURNISHED WITH A STAND-ALONE VALVE CONTROLLER. VALVE CONTROLLER WILL NOT REQUIRE A SECOND HAND-HELD DEVICE FOR PROGRAMMING. CONTROLLER MUST HAVE MINIMUM OF 12 POSSIBLE FLUSHING CYCLES PER DAY.
4. SHALL BE SUBMERSIBLE TO 12 FEET, OPERATE WITH A 9 VOLT BATTERY AND HAVE RESIN SEATED ELECTRICAL COMPONENTS.
5. SOLENOID SHALL HAVE NO LOOSE PARTS WHEN REMOVED FROM VALVE. REMOVAL OF 2" OLENOID VALVE SHALL BE POSSIBLE VIA AN O-RING CONNECTOR LOCATED UNDER THE VALVE AFTER REMOVAL OF STAINLESS STEEL ACCESS PLATE.
6. VALVE ASSEMBLY SHALL BE CONTAINED WITHIN A UV-RESISTANT LOCKING COVER.
7. UNIT MODEL # SHALL BE 9400 AS MANUFACTURED BY KUPFERLE FOUNDRY COMPANY. MODEL #9400 ST. LOUIS, MO. 1-800-231-3990, OR APPROVED EQUAL.
8. FLUSH WATER LINES FREE OF DEBRIS BEFORE INSTALLATION

AUTOMATIC FLUSHING DEVICE

N T.S.

THE CITY OF Anna

AUTOMATIC FLUSH VALVE

REV DATE: AUGUST 2020

STANDARD DRAWING NO.

WAT-18

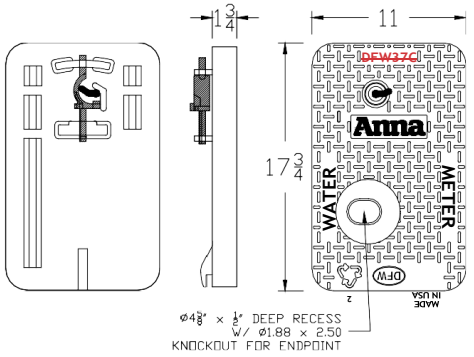

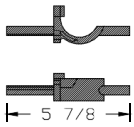

~~DFW-PLOCK~~



~~DFW-KEY~~

1	BLACK COLOR
K	PLASTIC LOCK
F	KNOCKOUT
DEEP	DEEP RECESS
ANNA	CITY OF ANNA

~~DFW37C-1KFDEEP-ANNA-LID~~

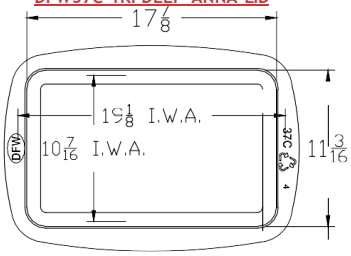

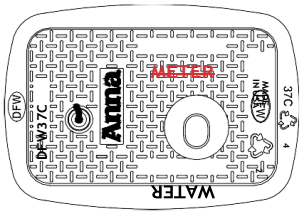

~~DFW37C-12-BODY~~

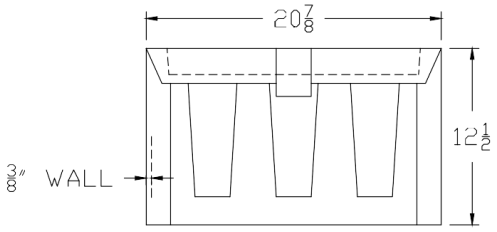

~~DFW37C-12-1KFDEEP-ANNA~~

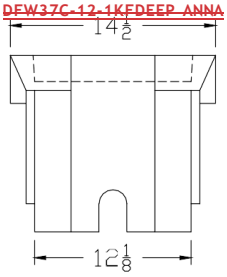

NOTES
1) DIM'S ± 1/8" U.N.O.
2) LID MATERIAL: HDPE
3) BODY MATERIAL: LLDPE
4) WALL THICKNESS: 3/8" MINIMUM
5) I.W.A. = INSIDE WORK AREA

DFW PLASTICS, INC. ENGAGES IN ONGOING RESEARCH AND DEVELOPMENT TO IMPROVE AND ENHANCE ITS PRODUCTS. THEREFORE, DFW PLASTICS, INC. RESERVES THE RIGHT TO CHANGE PRODUCT OR SYSTEM SPECIFICATIONS WITHOUT NOTICE.

DFW PLASTICS, INC.
PO BOX 648
BEDFORD, TEXAS 76095
(817) 439-3600
(817) 439-3700 (f)
www.dfwplasticsinc.com

DFW37C-12-1KFDEEP ANNA

THIS DRAWING IS THE PROPERTY OF DFW PLASTICS, INC.

CREATED:	
UPDATED:	~~12/17/2019~~
ACCEPTED:	~~12/17/2019~~
DRAWN BY:	~~JWC~~ RMC
PLOT SCALE:	

THE CITY OF Anna

~~WATER METER LID~~

~~METERS UP TO 1"~~

REV DATE: AUGUST ~~NTS~~ 2020

STANDARD DRAWING NO.

~~WAT-19~~

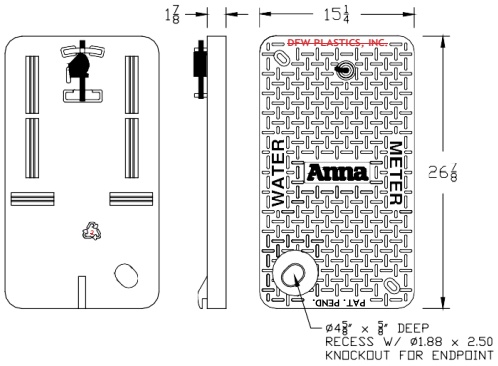

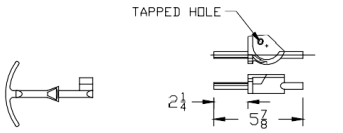

~~DFW-KEY~~ ~~DFW-SBLOCK-XL~~

~~LID KEY~~	
1	BLACK COLOR
S	SECURITY BRASS LOCK
F	KNOCKOUT
DEEP	DEEP RECESS
ANNA	CITY OF ANNA

~~DFW65C-1SFDEEP ANNA LID~~

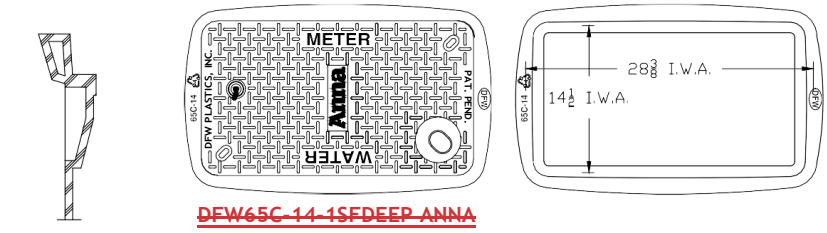

~~DFW65C-14-1SFDEEP ANNA~~

~~KISS OFF DETAIL~~
~~SECTION A-A~~

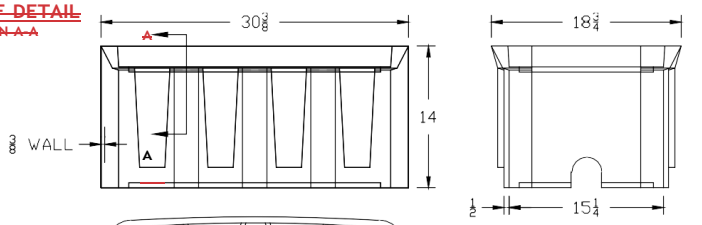

~~DFW65C-14-BODY~~

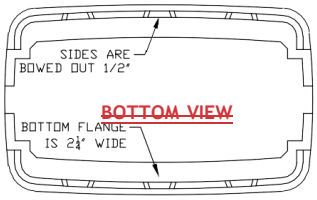

~~BOTTOM VIEW~~

NOTES
1) DIM'S ± 1/8" U.N.O.
2) LID MATERIAL: HDPE
3) BODY MATERIAL: LLDPE
4) WALL THICKNESS: 3/8" MINIMUM
5) I.W.A. = INSIDE WORK AREA

DFW PLASTICS, INC. ENGAGES IN ONGOING RESEARCH AND DEVELOPMENT TO IMPROVE AND ENHANCE ITS PRODUCTS. THEREFORE, DFW PLASTICS, INC. RESERVES THE RIGHT TO CHANGE PRODUCT OR SYSTEM SPECIFICATIONS WITHOUT NOTICE.

DFW PLASTICS, INC.
PO BOX 648
BEDFORD, TEXAS 76095
(817) 439-3600
(817) 439-3700 (f)
www.dfwplasticsinc.com

DFW65C-14-1SFDEEP ANNA

THIS DRAWING IS THE PROPERTY OF DFW PLASTICS, INC.

CREATED:	
UPDATED:	~~12/17/2019~~
ACCEPTED:	~~12/17/2019~~
DRAWN BY:	~~JMc~~ RMc
PLOT SCALE:	

THE CITY OF Anna

~~WATER METER LID~~

~~METERS FROM 1.5" TO 2"~~

REV DATE: AUGUST 2020 ~~NTS~~

STANDARD DRAWING NO.

~~WAT-19A~~

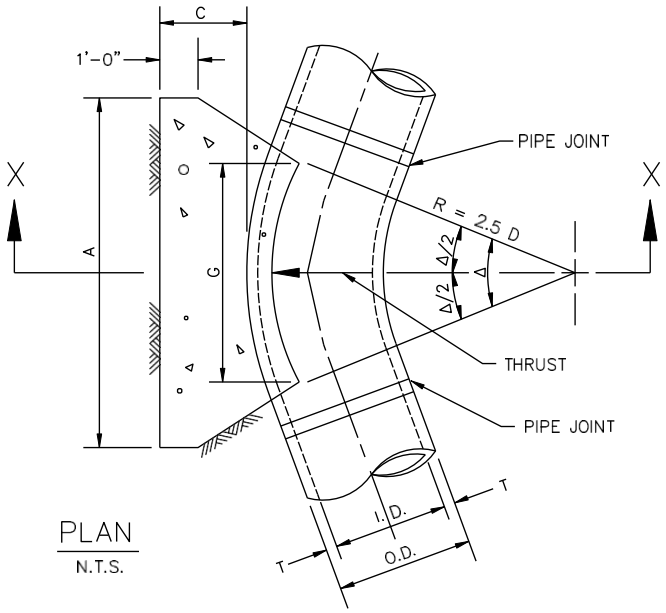

PLAN
N.T.S.

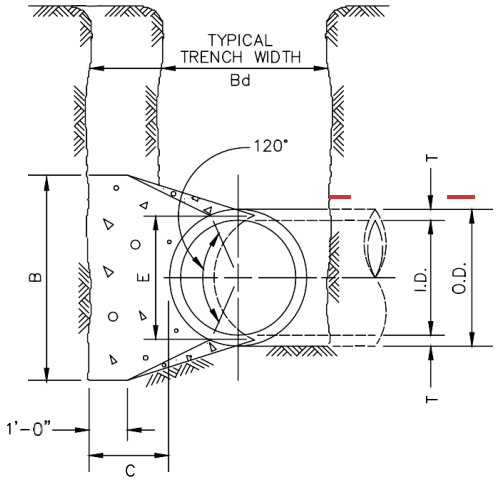

SECTION X-X
N.T.S.

THE CITY OF Anna	~~HORIZONTAL THRUST BLOCK~~	REV. DATE: AUGUST 2020
	~~AT PIPE BEND (1 OF 3)~~	STANDARD DRAWING NO. ~~WAT-20~~

I.D. (IN.)	T (IN.)	Δ = 11.25° (FT.)	Δ ≥ 22.50° (FT.)	E (FT.)
4,6,8	0.4	1.5	1.5	0.9
10,12	0.5	1.5	1.5	1.2
16,18	0.6	1.5	1.5	1.6
20	0.7	1.5	1.5	1.8
24	0.9	1.5	1.5	2.1
30	2.9	1.5	1.9	2.6
36	4.5	1.5	2.3	3.3
42	5.0	1.8	2.6	3.8
48	5.5	2.0	3.0	4.3
54	6.0	2.3	3.4	4.8
60	6.5	2.5	3.8	5.3
66	6.8	2.8	4.1	5.7
72	7.5	3.0	4.5	6.3
78	7.5	3.3	4.9	6.7
84	8.0	3.5	5.3	7.2
90	8.5	3.8	5.6	7.7
96	9.0	4.0	6.0	8.2

	Δ = 11.25°								Δ= 22.50°								
			EARTH			ROCK						EARTH			ROCK		
I.D. (IN.)	G (FT.)	THRUST (TONS)	A (FT.)	B (FT.)	VOL. (C.Y.)	A (FT.)	B (FT.)	VOL. (C.Y.)	I.D. (IN.)	G (FT.)	THRUST (TONS)	A (FT.)	B (FT.)	VOL. (C.Y.)	A (FT.)	B (FT.)	VOL. (C.Y.)
4,6,8	0.4	1.0	1.0	1.5	0.1	1.0	1.0	0.1	4,6,8	0.8	2.0	1.5	1.5	0.1	1.0	1.0	0.1
10,12	0.6	2.2	1.5	1.5	0.1	1.0	1.5	0.1	10,12	1.1	4.4	2.0	2.5	0.3	1.5	1.5	0.1
16,18	0.8	5.0	2.0	2.5	0.3	1.5	2.0	0.2	16,18	1.6	9.9	3.0	3.5	0.6	2.0	2.5	0.3
20	0.9	6.2	2.0	3.5	0.4	1.5	3.0	0.3	20	1.8	12.3	3.5	3.5	0.7	2.0	3.0	0.4
24	1.1	8.9	3.0	3.5	0.5	1.5	3.0	0.3	24	2.2	17.7	4.0	4.5	1.0	3.0	3.5	0.5
30	1.4	10.4	3.0	3.5	0.6	2.0	3.5	0.4	30	2.7	20.7	5.0	4.5	1.5	3.0	4.0	0.8
36	1.7	15.0	3.5	4.5	0.9	2.0	4.0	0.5	36	3.3	29.8	5.5	5.5	2.3	4.0	4.0	1.3
42	1.9	20.4	4.5	5.0	1.5	2.5	5.0	0.8	42	3.8	40.5	7.0	6.0	3.9	4.5	5.0	2.1
48	2.2	26.6	4.5	6.0	2.0	2.5	6.0	1.1	48	4.4	52.9	8.0	7.0	5.7	4.5	6.0	2.8
54	2.5	33.7	6.0	6.0	3.0	3.0	6.0	1.4	54	4.9	67.0	9.0	8.0	8.0	6.0	6.0	4.1
60	2.7	41.6	6.0	7.0	3.8	3.0	7.0	1.8	60	5.5	82.7	9.5	9.0	10.6	6.0	7.0	5.3
66	3.0	50.3	6.5	8.0	5.1	3.5	8.0	2.7	66	6.0	100.1	10.5	10.0	14.1	6.5	8.0	7.2
72	3.3	59.9	7.5	8.0	6.3	4.0	8.0	3.3	72	6.6	119.1	11.0	11.0	17.6	7.5	8.0	9.1
78	3.6	70.2	8.0	9.0	8.1	4.0	9.0	3.9	78	7.1	139.8	12.0	12.0	22.5	8.0	9.0	11.7
84	3.8	81.5	8.5	10.0	10.3	4.5	10.0	5.3	84	7.6	162.1	13.0	12.5	27.2	8.5	10.0	14.8
90	4.1	93.5	9.5	10.0	12.2	5.0	10.0	6.3	90	8.2	186.1	14.0	13.5	33.7	9.5	10.0	17.7
96	4.4	106.4	10.0	11.0	15.0	5.0	11.0	7.4	96	8.7	211.7	15.0	14.5	41.2	10.0	11.0	21.8

TABLES OF DIMENSIONS AND QUANTITIES

THE CITY OF Anna

~~HORIZONTAL THRUST BLOCK~~

~~AT PIPE BEND (2 OF 3)~~

REV DATE: AUGUST 2020

STANDARD DRAWING NO.

~~WAT-20A~~

I.D. (IN.)	I:,= 30· G (FT.)	THRUST (TONS)	EARTH A (FT.)	EARTH B (FT.)	EARTH VOL. (C.Y.)	ROCK A (FT.)	ROCK B (FT.)	ROCK VOL. (C.Y.)
4,6,8	1.0	2.6	2.0	1.5	0.2	1.0	1.5	0.1
10,12	1.5	5.9	2.5	2.5	0.3	2.0	1.5	0.2
16,18	2.2	13.2	3.5	4.0	0.8	2.5	3.0	0.4
20	2.4	16.3	4.5	4.0	1.0	3.0	3.0	0.5
24	2.9	23.4	6.0	4.0	1.4	3.5	3.5	0.7
30	3.6	27.5	6.5	5.0	1.9	3.5	4.0	0.9
36	4.4	39.5	7.0	6.0	3.4	4.5	4.5	1.6
42	5.1	53.8	8.0	7.0	5.1	5.5	5.0	2.5
48	5.8	70.3	9.0	8.0	7.4	6.0	6.0	3.7
54	6.5	89.0	10.0	9.0	10.3	7.0	6.5	5.3
60	7.3	110.0	11.0	10.0	13.9	7.5	7.5	7.3
66	8.0	132.9	12.5	11.0	18.9	8.5	8.0	9.6
72	8.7	158.2	13.5	12.0	24.0	9.0	9.0	12.3
78	9.4	185.6	14.5	13.0	30.0	10.0	9.5	15.6
84	10.1	215.3	15.5	14.0	37.1	10.5	10.5	19.5
90	10.9	247.1	16.5	15.0	45.0	11.5	11.0	23.9
96	11.6	281.2	18.0	16.0	55.5	12.5	11.5	28.9

I.D. (IN.)	I:,= 45· G (FT.)	THRUST (TONS)	EARTH A (FT.)	EARTH B (FT.)	EARTH VOL. (C.Y.)	ROCK A (FT.)	ROCK B (FT.)	ROCK VOL. (C.Y.)
4,6,8	1.5	3.9	2.0	2.0	0.2	1.5	1.5	0.1
10,12	2.2	8.7	3.5	2.5	0.5	2.0	2.5	0.3
16,18	3.2	19.5	4.5	4.5	1.2	3.0	3.5	0.6
20	3.6	24.1	5.5	4.5	1.5	3.5	3.5	0.7
24	4.3	34.6	8.0	4.5	2.3	4.5	4.0	1.1
30	5.4	40.6	8.5	5.0	3.2	5.5	4.0	1.6
36	6.5	58.5	10.0	6.0	5.3	6.5	4.5	2.6
42	7.5	79.6	11.5	7.0	8.1	8.0	5.0	4.2
48	8.6	104.0	13.0	8.0	11.9	9.0	6.0	6.3
54	9.7	131.5	15.0	9.0	17.1	10.5	6.5	8.9
60	10.7	162.4	16.5	10.0	23.1	11.0	7.5	12.0
66	11.8	196.5	18.0	11.0	30.1	12.0	8.5	16.2
72	12.9	233.9	19.5	12.0	38.6	14.0	8.5	20.7
78	13.9	274.5	21.5	13.0	49.8	14.5	9.5	25.9
84	15.0	318.4	23.0	14.0	61.2	15.5	10.5	32.6
90	16.1	365.5	24.5	15.0	74.5	17.5	10.5	39.6
96	17.1	415.6	26.0	16.0	89.5	18.5	11.5	48.5

I.D. (IN.)	I:,= 67.50" G (FT.)	THRUST (TONS)	EARTH A (FT.)	EARTH B (FT.)	EARTH VOL. (C.Y.)	ROCK A (FT.)	ROCK B (FT.)	ROCK VOL. (C.Y.)
4,6,8	2.1	5.6	3.0	2.0	0.3	2.0	1.5	0.2
10,12	3.1	12.6	5.5	2.5	0.8	3.5	2.0	0.4
16,18	4.7	28.3	7.5	4.0	1.9	5.5	3.0	0.9
20	5.2	34.9	9.0	4.0	2.3	5.5	3.5	1.2
24	6.2	50.3	11.5	4.5	3.5	6.5	4.0	1.6
30	7.8	58.9	12.0	5.0	4.8	7.5	4.0	2.2
36	9.4	84.9	14.5	6.0	8.2	9.5	4.5	3.8
42	10.9	115.5	17.0	7.0	12.8	11.0	5.5	6.3
48	12.5	150.9	19.0	8.0	18.4	13.0	6.0	9.2
54	14.0	191.0	21.5	9.0	26.0	15.0	6.5	12.9
60	15.6	235.8	24.0	10.0	35.6	16.0	7.5	17.6
66	17.1	285.3	26.0	11.0	46.0	18.0	8.0	23.0
72	18.7	339.5	28.5	12.0	57.8	19.0	9.0	28.4
78	20.2	398.5	31.0	13.0	75.7	21.0	9.5	37.4
84	21.8	462.1	33.5	14.0	94.7	22.0	10.5	46.5
90	23.3	530.5	35.5	15.0	114.4	24.5	11.0	58.2
96	24.9	603.6	38.0	16.0	138.9	25.5	12.0	70.0

I.D. (IN.)	t:, = go· G (FT.)	THRUST (TONS)	EARTH A (FT.)	EARTH B (FT.)	EARTH VOL. (C.Y.)	ROCK A (FT.)	ROCK B (FT.)	ROCK VOL. (C.Y.)
4,6,8	2.7	7.1	5.0	1.5	0.4	2.0	2.0	0.2
10,12	4.0	16.0	6.5	2.5	1.0	3.5	2.5	0.5
16,18	6.0	36.0	9.0	4.0	2.4	4.5	4.0	1.0
20	6.6	44.4	10.0	4.5	3.1	6.0	4.0	1.5
24	7.9	64.0	14.5	4.5	5.0	8.0	4.0	2.1
30	9.9	75.0	15.0	5.0	6.7	10.0	4.0	3.3
36	11.9	108.0	18.0	6.0	11.4	12.0	4.5	5.3
42	13.9	147.0	21.0	7.0	17.8	14.0	5.5	8.7
48	15.9	192.0	24.0	8.0	26.2	16.0	6.0	12.4
54	17.9	243.0	27.0	9.0	36.9	18.0	7.0	18.1
60	19.9	299.8	30.0	10.0	50.3	20.0	7.5	24.0
66	21.8	362.8	33.0	11.0	66.2	22.0	8.5	32.5
72	23.8	431.8	36.0	12.0	85.6	24.0	9.0	41.0
78	25.7	506.7	39.0	13.0	108.2	26.0	10.0	53.2
84	27.7	587.7	42.0	14.0	134.4	28.0	10.5	64.8
90	29.0	674.6	45.0	15.0	164.9	30.0	11.5	81.2
96	31.6	767.5	48.0	16.0	199.0	32.0	12.0	95.1

TABLES OF DIMENSIONS AND QUANTITIES

THE CITY OF Anna

HORIZONTAL THRUST BLOCK

AT PIPE BEND (3 OF 3)

REV DATE:AUGUST 2020

STANDARD DRAWING NO.

WAT-20B

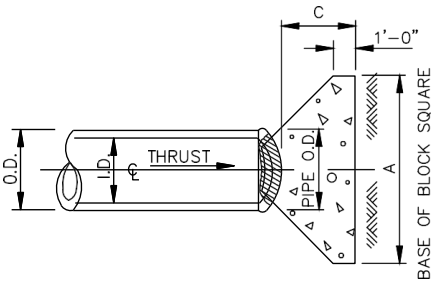

PLAN OF PLUG THRUST BLOCK

N.T.S.

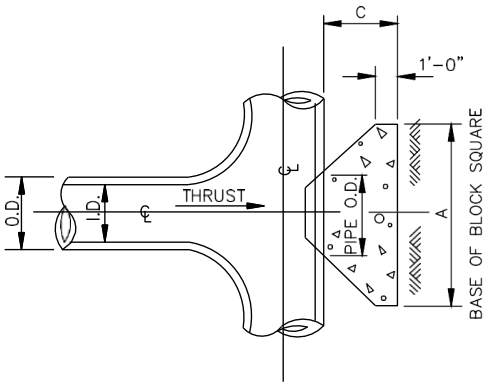

PLAN OF TEE THRUST BLOCK

N.T.S.

			EARTH		ROCK	
I.D. (IN.)	THRUST (TONS)	C (FT.)	A (FT.)	VOL. (C.Y.)	A (FT.)	VOL. (C.Y.)
4,6,8	5.1	1.5	2.5	0.3	2.0	0.2
10,12	11.3	1.5	3.5	0.6	2.5	0.3
16,18	25.5	2.0	5.5	1.6	4.0	0.9
20	31.5	2.0	6.0	1.9	4.0	0.9
24	45.2	2.5	7.0	3.1	5.0	1.7
30	53.0	3.0	7.5	4.1	5.5	2.4
36	76.3	4.0	9.0	7.3	6.5	4.2
42	104.0	4.5	10.5	11.0	7.5	6.2
48	136.0	5.0	12.0	15.6	8.5	8.7
54	172.0	5.5	13.5	21.4	9.5	11.9
60	212.0	6.0	15.0	28.4	10.5	15.7
66	257.0	6.5	16.5	36.8	11.5	20.5
72	305.0	7.5	17.5	47.2	12.5	27.2
78	358.0	8.0	19.0	58.9	13.5	33.7
84	416.0	8.5	20.5	72.3	14.5	41.2
90	477.0	9.0	22.0	87.7	15.5	49.7
96	543.0	9.5	23.5	104.8	16.5	61.0

THE CITY OF Anna

~~HORIZONTAL THRUST BLOCK~~

~~AT TEES & PLUGS~~

REV. DATE: AUGUST 2020

STANDARD DRAWING NO.

~~WAT-21~~

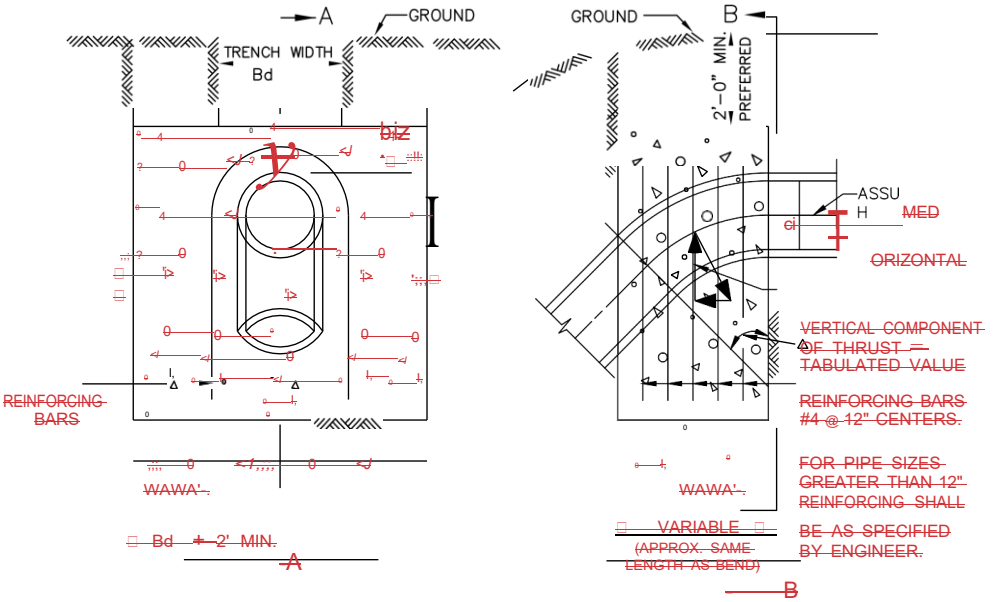

11	11.25°		22.50°		30°		45°		67.50°		90°		I.D. (IN.)
I.D. (IN.)	THRUST (TONS)	VOL. (C.Y.)	THRUST (TONS)	VOL. (C.Y.)	THRUST (TONS)	VOL. (C.Y.)	THRUST (TONS)	VOL. (C.Y.)	THRUST (TONS)	VOL. (C.Y.)	THRUST (TONS)	VOL. (C.Y.)	
4,6,8	1.0	0.5	2.0	1.0	2.5	1.3	3.6	1.8	4.6	2.3	5.0	2.5	4,6,8
10,12	2.2	1.1	4.3	2.2	5.7	2.8	8.0	4.0	10.5	5.2	11.3	5.7	10,12
16,18	5.0	2.5	9.7	4.9	12.7	6.4	18.0	9.0	23.5	11.8	25.5	12.7	16,18
20	6.1	3.1	12.0	6.0	15.7	7.9	22.2	11.1	29.2	14.5	31.4	15.7	20
24	8.2	4.4	17.3	8.7	22.6	11.3	32.0	16.0	41.8	20.9	45.2	22.6	24
30	10.5	5.2	20.3	10.1	26.5	13.3	37.5	18.8	49.0	24.5	53.1	26.5	30
36	14.9	7.5	29.2	14.6	38.2	19.1	54.0	27.0	70.5	35.3	76.4	38.2	36
42	20.3	10.1	39.8	19.9	52.0	26.0	73.5	36.7	96.0	48.0	104.0	52.0	42
48	26.5	13.2	51.9	26.0	67.9	33.9	96.0	48.0	126.0	62.7	136.0	67.9	48
54	33.5	16.8	65.7	32.9	85.9	42.9	122.0	60.7	159.0	79.4	172.0	85.9	54
60	41.4	20.7	81.2	40.6	106.0	53.0	150.0	75.0	196.0	98.0	212.0	106.0	60
66	50.1	25.0	98.2	49.1	128.0	64.2	182.0	90.7	237.0	119.0	257.0	128.0	66
72	59.6	29.8	117.0	58.4	153.0	76.3	216.0	108.0	282.0	141.0	305.0	153.0	72
78	69.9	35.0	137.0	68.6	179.0	90.0	254.0	127.0	331.0	166.0	358.0	179.0	78
84	81.1	40.5	159.0	79.5	208.0	104.0	295.0	148.0	384.0	192.0	416.0	208.0	84
90	93.1	46.5	183.0	91.3	239.0	119.0	337.0	169.0	441.0	221.0	477.0	239.0	90
96	106.0	53.0	208.0	104.0	272.0	136.0	384.0	192.0	502.0	251.0	543.0	272.0	96

REV. DATE: AUGUST, 2020

THE CITY OF Anna

VERTICAL THRUST BLOCK AT PIPE BEND

STANDARD DRAWING NO.

WAT-22

GENERAL NOTES FOR ALL THRUST BLOCKS:

1. CONCRETE FOR BLOCKING SHALL BE CLASS "B".
2. ALL CALCULATIONS ARE BASED ON INTERNAL PRESSURE OF 200 PSI FOR DUCTILE IRON, P.V.C., AND 150 PSI FOR CONCRETE PIPE.
3. VOLUMES OF THRUST BLOCKS ARE NET VOLUMES OF CONCRETE TO BE FURNISHED. THE CORRESPONDING WEIGHT OF THE CONCRETE (CLASS "B") IS EQUAL TO OR GREATER THAN THE VERTICAL COMPONENT OF THE THRUST ON THE VERTICAL BEND.
4. WALL THICKNESS (T) ASSUMED HERE FOR ESTIMATING PURPOSES ONLY.
5. POUR CONCRETE FOR BLOCK AGAINST UNDISTURBED EARTH.
6. DIMENSIONS MAY BE VARIED AS REQUIRED BY FIELD CONDITIONS WHERE AND AS DIRECTED BY THE ENGINEER. THE VOLUME OF CONCRETE BLOCKING SHALL NOT BE LESS THAN SHOWN HERE.
7. THE SOIL BEARING PRESSURES ARE BASED ON 1000 LBS./S.F. IN SOIL AND 2000 LBS./S.F. IN ROCK.
8. USE POLYETHYLENE WRAP OR EQUAL BETWEEN CONCRETE AND BEND, TEE, OR PLUG TO PREVENT THE CONCRETE FROM STICKING TO IT.
9. CONCRETE SHALL NOT EXTEND BEYOND JOINTS.

THE CITY OF Anna	THRUST BLOCK	REV. DATE: AUGUST 2020
	GENERAL NOTES	STANDARD DRAWING NO. WAT-23

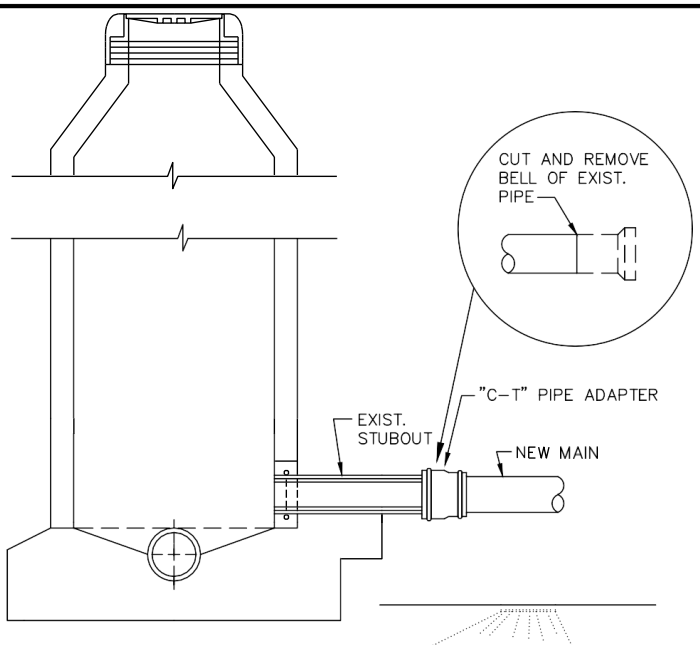

AT STUBOUT
N.T.S.

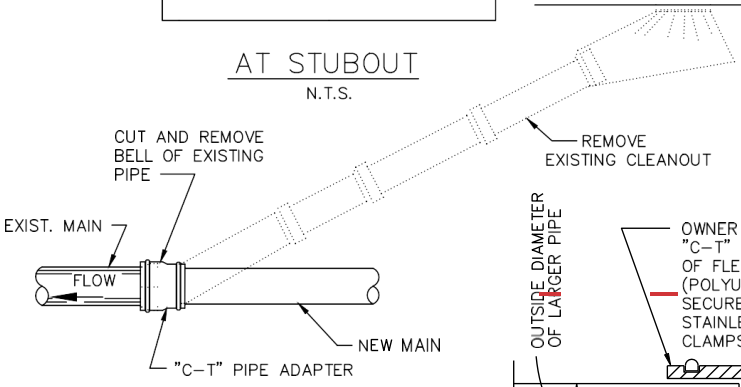

AT CLEANOUT
N.T.S.

NOTE:
THIS DETAIL FOR USE ONLY WHEN NEW MAIN WILL NOT MATE WITH EXISTING MAIN JOINT DUE TO DIFFERENT DIMENSIONS OR MATERIALS AND A MANHOLE IS NOT REQUIRED.

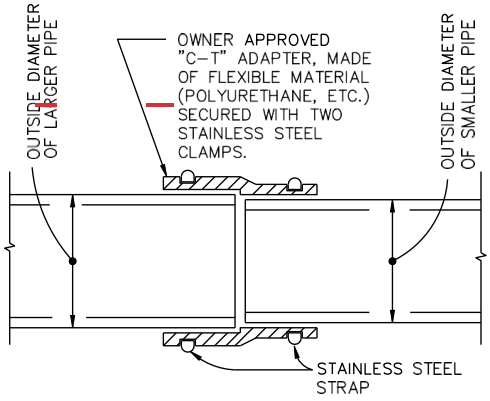

"C–T" PIPE ADAPTER
N.T.S.

THE CITY OF Anna

~~WASTEWATER MAIN TIE-IN~~

~~AT CLEANOUT OR MANHOLE STUBOUT~~

REV DATE: MARCH 2020

STANDARD DRAWING NO.

~~SS-01~~

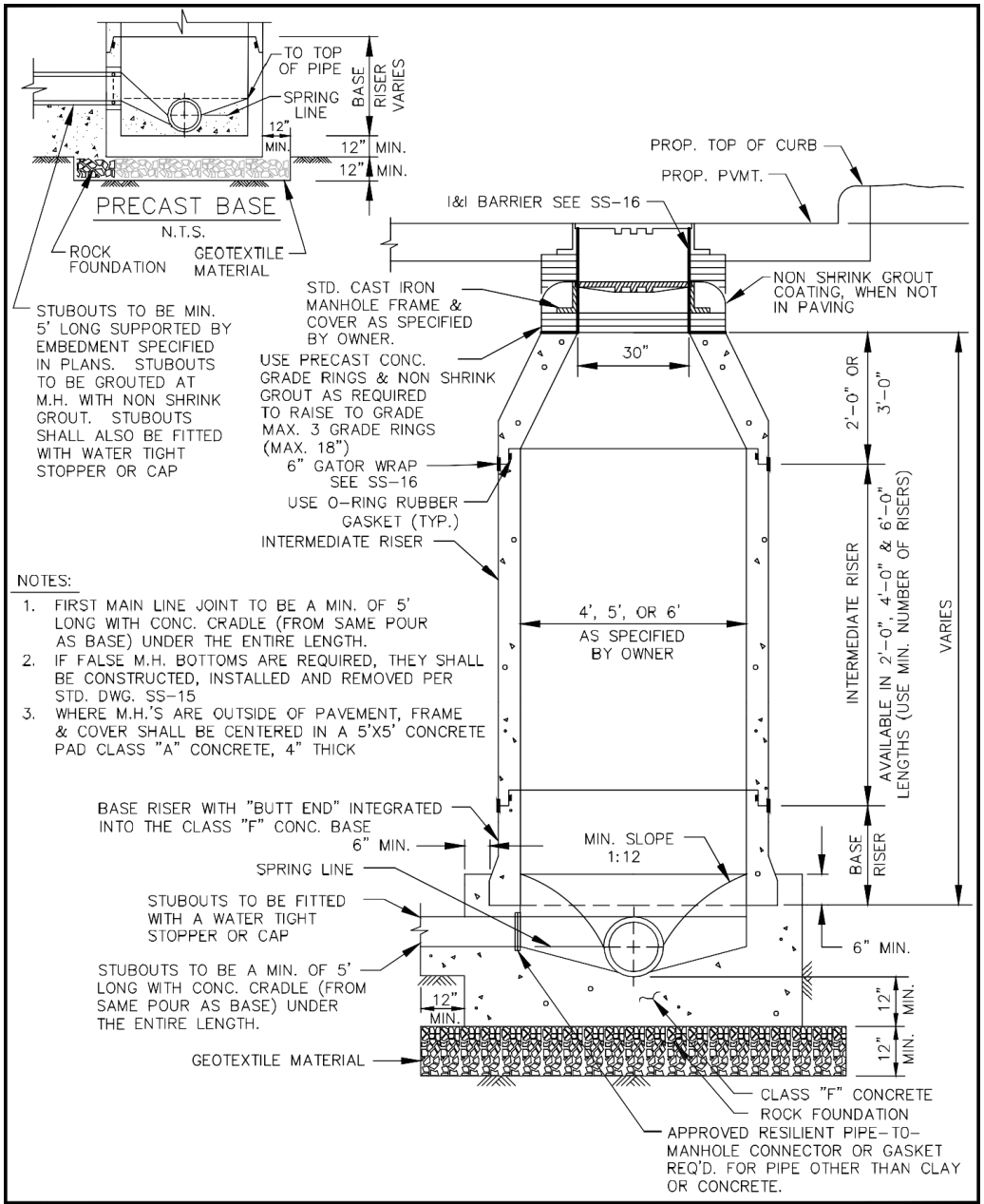

THE CITY OF Anna	~~WASTEWATER MANHOLE~~	REV DATE: AUGUST 2020
	~~PRECAST~~	STANDARD DRAWING NO. ~~SS-02~~

ADJUSTABLE FRAME

ROOF OPTIONS

N.T.S.

FRAME CAST IN CONC.

STD. M.H. FRAME & COVER
AS SPECIFIED BY OWNER

1/2" NON SHRINK
GROUT COATING

USE PRECAST CONCRETE
GRADE RINGS & NON
SHRINK GROUT AS
REQUIRED TO RAISE
TO GRADE.
(MAX. 3 COURSES)

FOR 5' & 6' DIA. M.H.'S
SEE TRANSITION DETAIL

6" MIN.

4'-0"

8" MIN.

5'-0" & 6'-0"

CLASS "F" CONCRETE
MONOLITHIC POUR

12"

MIN.

4'-0"

GEOTEXTILE
MATERIAL

ROCK FOUNDATION

5'-0" & 6'-0"

8" MIN.

TRANSITION DETAIL FOR 5' & 6' DIA. M.H.'S

N.T.S.

NOTES

1. WHERE M.H.'S ARE IN "PROPOSED" PAVING, FRAME & COVER SHALL BE SET 23" BELOW THE PROPOSED PAVEMENT GRADE.
2. IF FALSE M.H. BOTTOMS ARE REQUIRED THEY SHALL BE CONSTRUCTED, INSTALLED AND REMOVED. PER STD. DWG. SS-15
3. WHERE M.H.'S ARE OUTSIDE OF PAVEMENT, FRAME & COVER SHALL BE CENTERED IN A 5'X5' CONCRETE PAD CLASS "A"

CONCRETE, 4" THICK

APPROVED RESILIENT PIPE-TO-MANHOLE CONNECTOR OR GASKET REQUIRED FOR PIPE OTHER THAN CLAY OR CONCRETE.

STUBOUT TO BE FITTED WITH WATERTIGHT

FIRST MAIN LINE JOINT TO BE A MIN. OF 5' LONG WITH CONC. CRADLE

(FROM SAME POUR AS BASE) UNDER ENTIRE LENGTH.

A MIN. OF 5' LONG WITH CONC. CRADLE (FROM SAME POUR) UNDER ENTIRE LENGTH

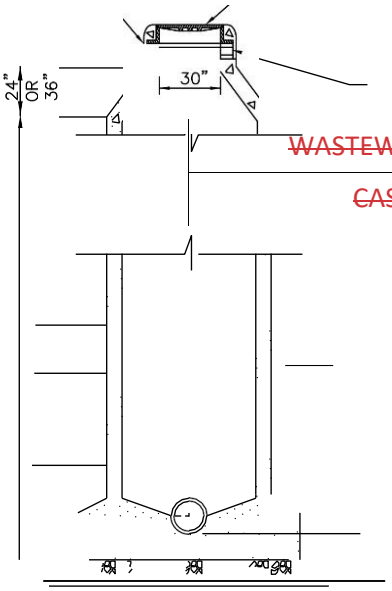

STD. M.H. FRAME & COVER AS SPECIFIED BY OWNER

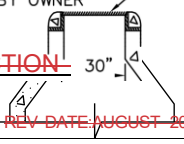

~~STUBOUT CONNECTION~~

N.T.S.

~~WASTEWATER MANHOLE~~

~~CAST-IN-PLACE~~

~~REV DATE: AUGUST 2020~~

~~STANDARD DRAWING NO.~~

~~SS-03~~

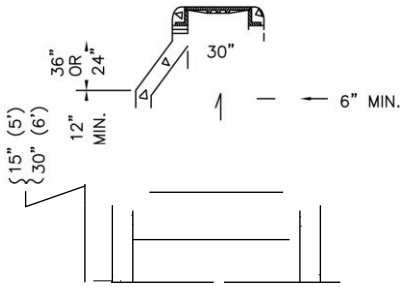

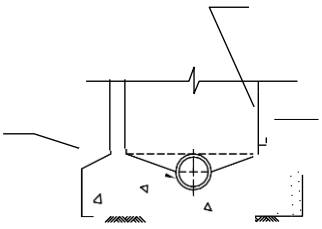

THE CITY OF Anna

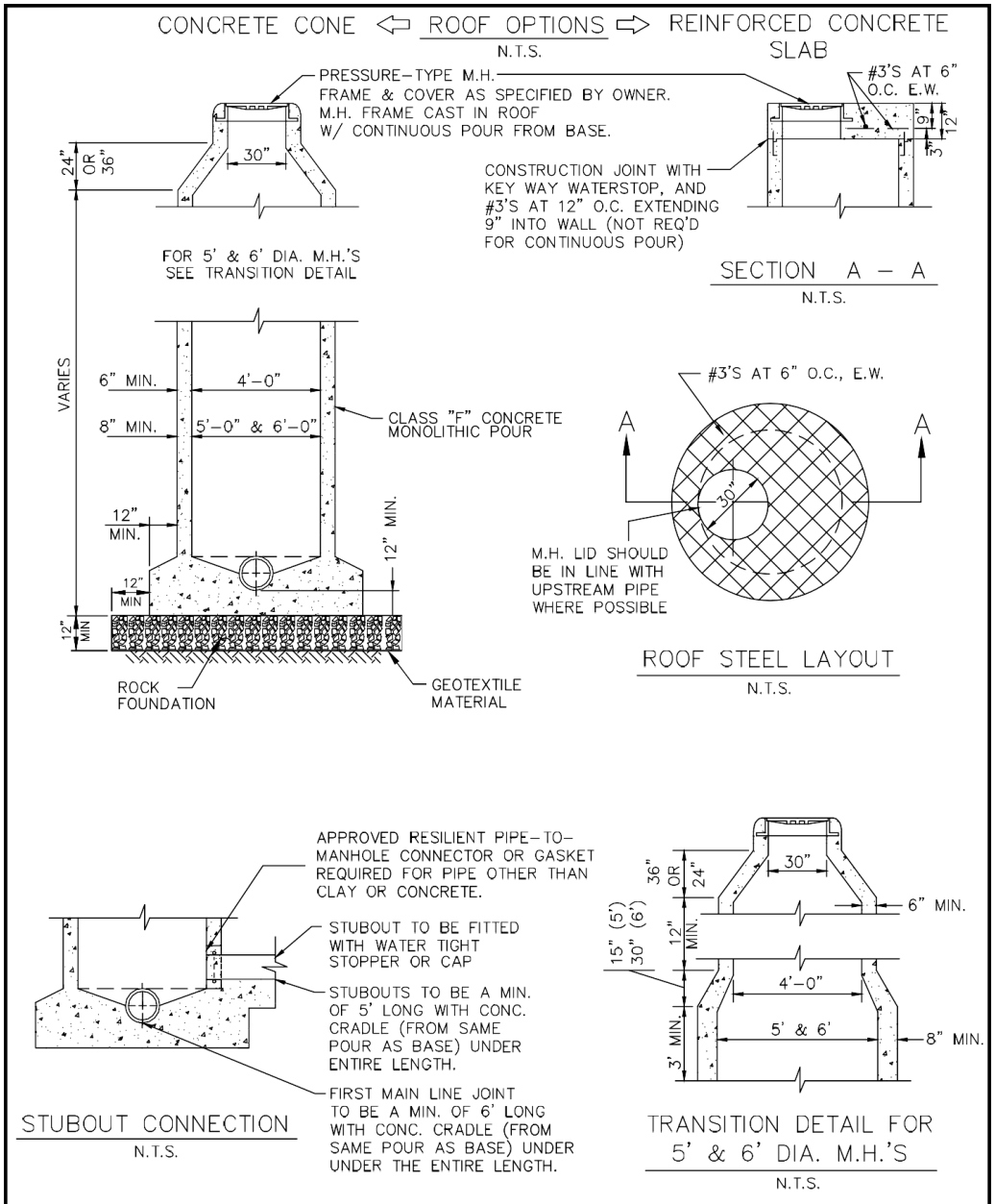

THE CITY OF Anna	~~WASTEWATER MANHOLE~~ ~~PRESSURE MANHOLE~~	REV DATE: MARCH 2020 STANDARD DRAWING NO. ~~SS-04~~

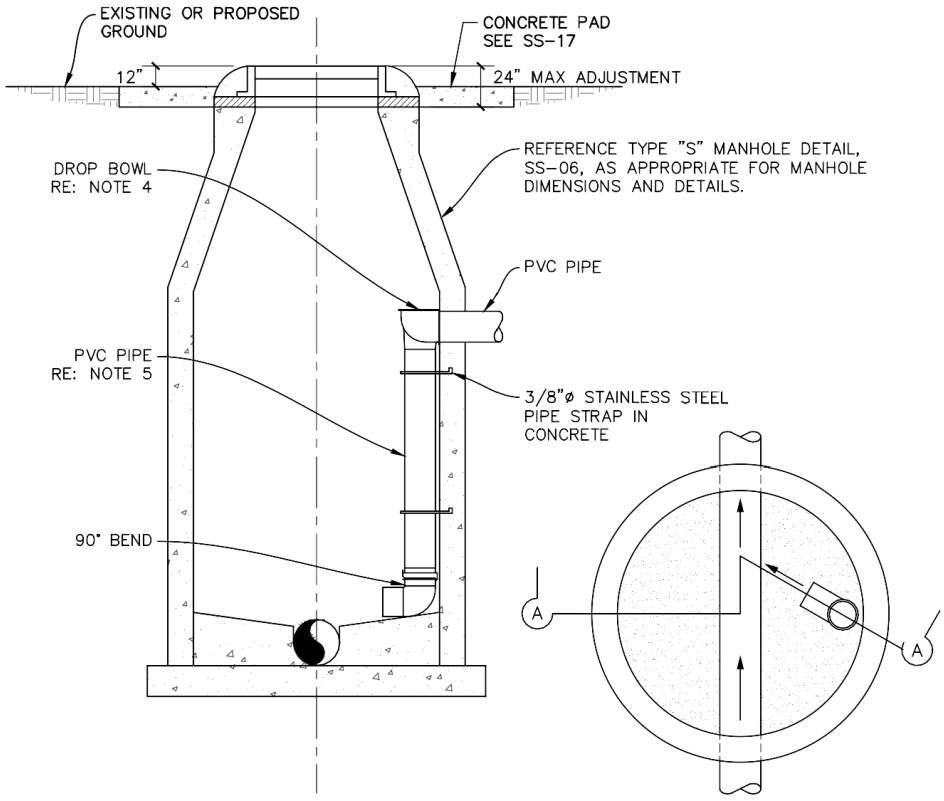

ELEVATION A **PLAN**

NOTES:

1. PVC PIPE WITHIN MANHOLE SHALL BE SDR-35 FOR DEPTHS LESS THAN 10 FEET.
2. PVC PIPE WITHIN MANHOLE SHALL BE SDR-26 FOR DEPTHS 10 FEET AND GREATER.
3. INSIDE PIPE SHALL NOT BE PLACED IN CONE AREA.
4. DROP BOWL SHALL BE RELINER PRODUCT AS MANUFACTURED BY DURAN INC., OR APPROVED EQUAL.
5. DROP PIPE SIZE SHALL MATCH INCOMING SEWER LINE SIZE.

THE CITY OF Anna	~~WASTEWATER MANHOLE~~ ~~INTERNAL DROP CONNECTION~~	REV DATE: MARCH 2020 STANDARD DRAWING NO. ~~SS-05~~

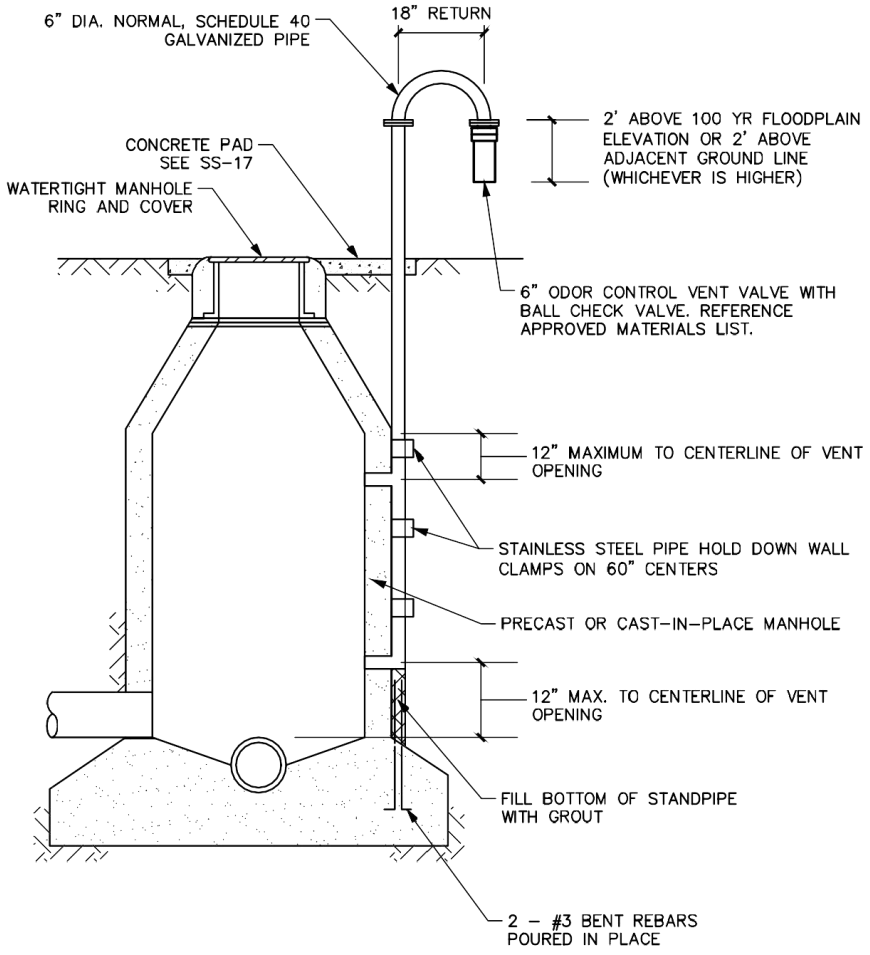

THE CITY OF Anna	~~WASTEWATER MANHOLE~~	REV DATE: MARCH 2020
	~~VENTED TYPE 'S'~~	STANDARD DRAWING NO. ~~SS-06~~

NOTES:

1. VENT PIPE OPENING IN PRECAST POLYMER CONCRETE MANHOLE WALL SHALL BE PRECAST BY MANHOLE MANUFACTURER.
2. LOCATION OF VENT PIPE SHALL BE OPPOSITE THE MANHOLE OPENING WITH WATERTIGHT RING AND COVER VENT TOP TO BE ELEVATED AT LEAST 24 INCHES ABOVE THE 100 YEAR FLOOD PLAIN ELEVATION OR 10' ABOVE ADJACENT GROUND LEVEL (WHICHEVER IS GREATER).

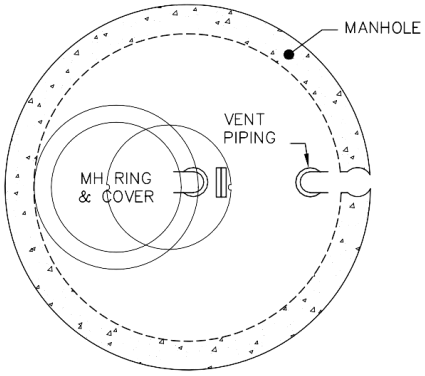

PLAN VIEW

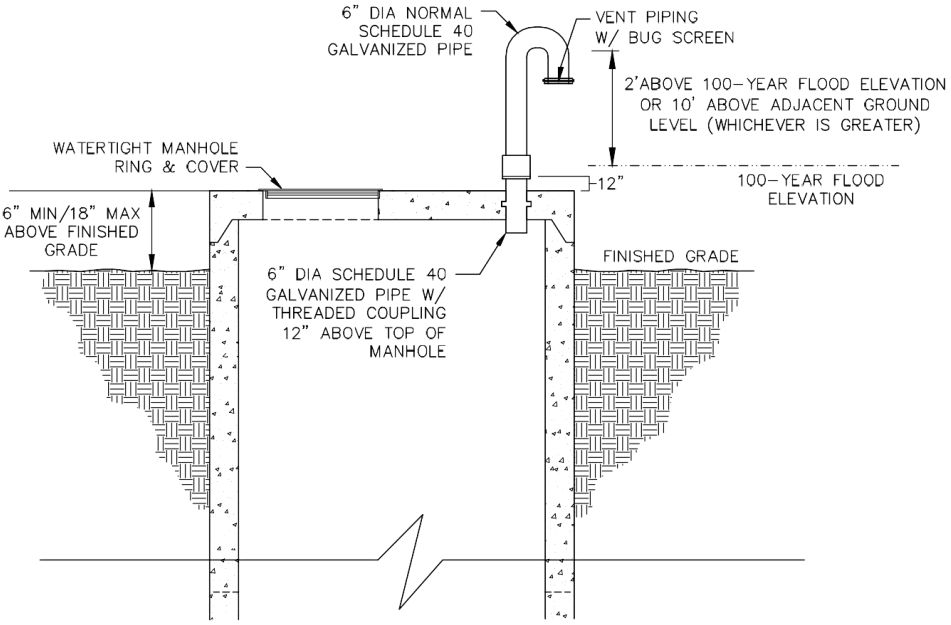

ELEVATION VIEW

THE CITY OF Anna	~~WASTEWATER MANHOLE~~	REV DATE: MARCH 2020
	~~VENTED FLAT TOP~~	STANDARD DRAWING NO. ~~SS-06A~~

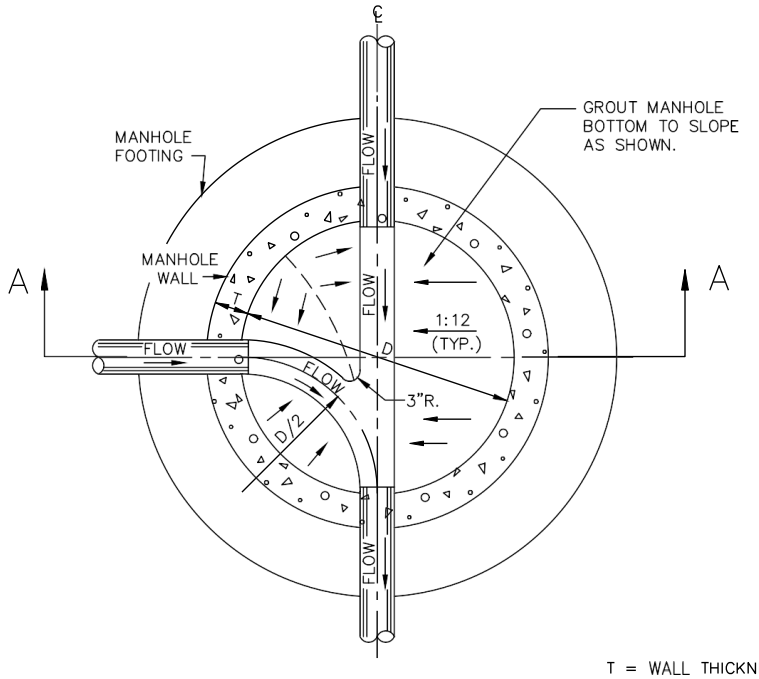

PLAN
N.T.S.

T = WALL THICKNESS
D = MANHOLE DIAMETER
d = PIPE DIAMETER

NOTE:
REFER TO MANHOLE STANDARD DRAWINGS FOR ADDITIONAL DETAIL OF M.H.

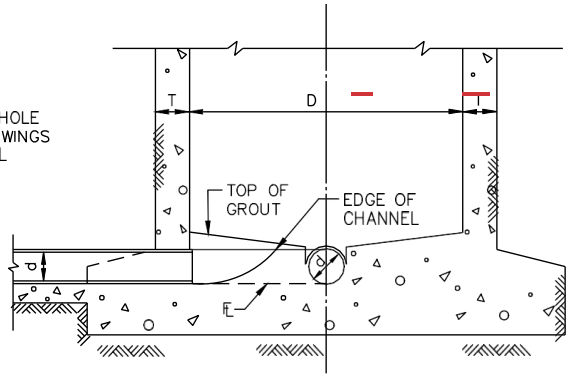

SECTION A–A
N.T.S.

THE CITY OF Anna

~~WASTEWATER MANHOLE~~

~~LINE INTERSECTION~~

REV DATE:MARCH 2020

STANDARD DRAWING NO.

~~SS-07~~

THE CITY OF Anna

WASTEWATER MAIN

CLEANOUT

SS-08

STANDARD DRAWING NO.

REV. DATE: AUGUST 2020

H'	4	5	6	7	8	9	10	11	12	13	14	15	16	17	18	19	20	H'
Y'	10	12	14	17	19	22	24	27	29	31	34	36	39	41	43	46	48	Y'

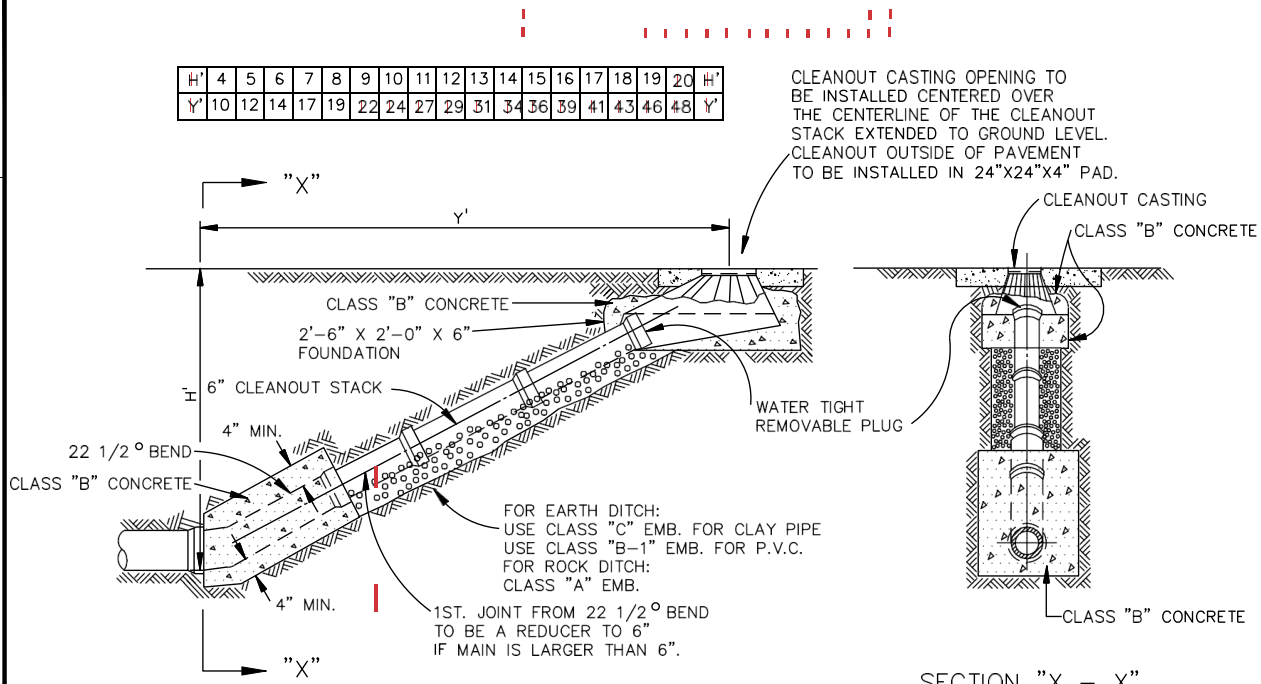

PROFILE VIEW
N.T.S.

SECTION "X – X"
N.T.S.

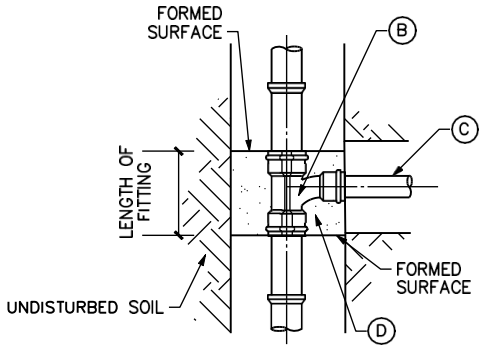

PLAN VIEW

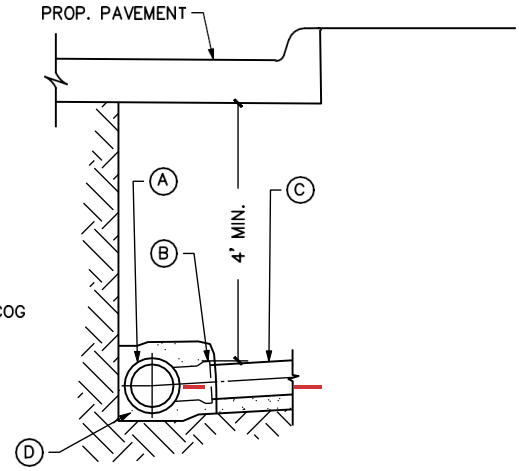

SECTION VIEW

KEY:

(A) WASTEWATER MAIN

(B) 4" WYE

(C) 4" WASTEWATER LAT. (LENGTH VARIES)

(D) CLASS B CONCRETE 2,000 PSI CONCRETE PER NCTCOG 702.2.4.2

NOTES:

1. THE CLEANOUT MAY BE PLACED IN THE PARKWAY OR SIDEWALK, IF NECESSARY.
2. REFERENCE TECHNICAL SPECIFICATION 333109.

THE CITY OF Anna	WASTEWATER SERVICES	REV DATE: MARCH 2020
	LATERAL CONNECTION	STANDARD DRAWING NO. SS-09

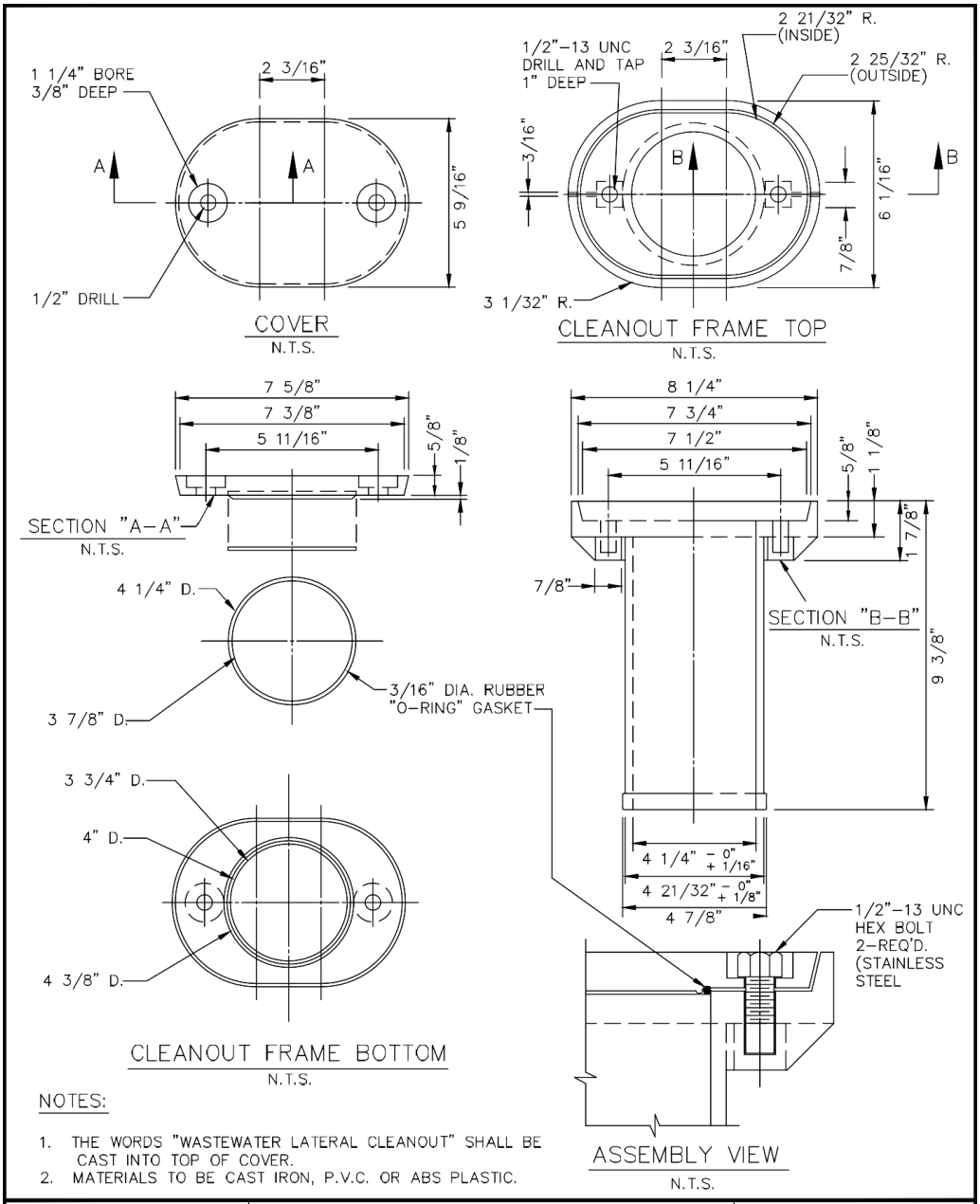

NOTES:

1. THE WORDS "WASTEWATER LATERAL CLEANOUT" SHALL BE CAST INTO TOP OF COVER.
2. MATERIALS TO BE CAST IRON, P.V.C. OR ABS PLASTIC.

THE CITY OF Anna	~~WASTEWATER SERVICES~~	REV DATE: MARCH 2020
	~~CLEANOUT FRAME & COVER~~	STANDARD DRAWING NO. ~~SS-10~~

THE CITY OF Anna

WASTEWATER SERVICES

~~DEEP LATERAL CONNECTION~~

~~SS-11~~

STANDARD DRAWING NO.

REV DATE: AUGUST 2020

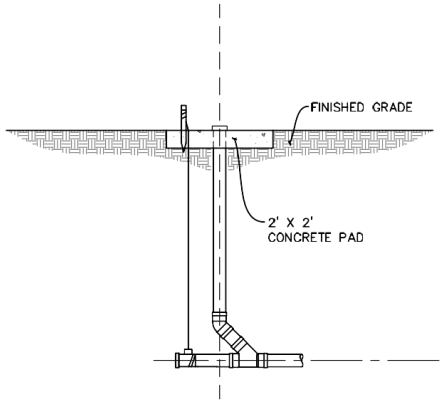

AT SERVICE CONNECTION

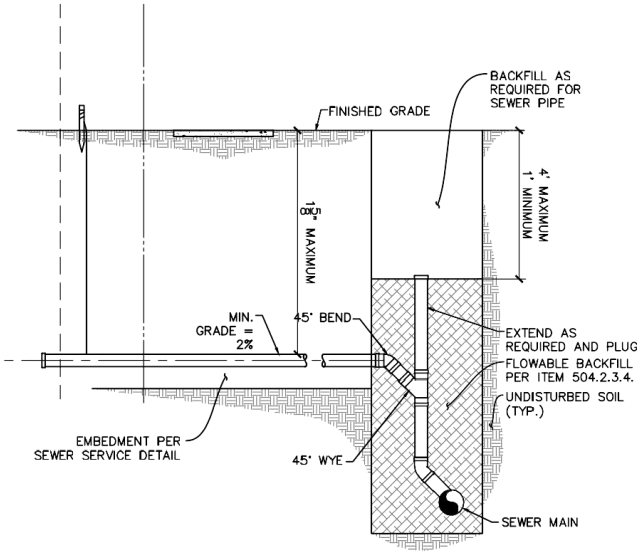

AT SUBDIVISION FINAL

NOTES:

1. FOR SEWER MAINS DEEPER THAN 9 FEET, A DEEP SEWER SERVICE SHALL BE USED.
2. SERVICE LINE SHALL BE 4–INCH WHEN SEWER MAIN IS DEEPER THAN 12 FEET.
3. SANITARY SEWER SERVICE SHALL BE INSTALLED IN ACCORDANCE WITH THE STANDARD SANITARY SEWER EMBEDMENT AND BACKFILL DETAIL.
4. WHERE THE CLEAN–OUT HOUSING IS LOCATED INSIDE THE SIDEWALK, THE HOUSING SHALL BE LOCATED FLUSH WITH THE FINISHED SURFACE.
5. WHERE THE CLEAN–OUT HOUSING IS LOCATED OUTSIDE OF THE SIDEWALK, THE HOUSING SHALL BE AT FINISHED GRADE.
6. AT SUBDIVISION FINAL, THE SEWER SERVICE SHALL BE EXTENDED TO THE OUTSIDE OF THE UTILITY EASEMENT, IF ONE EXISTS ADJACENT TO THE RIGHT–OF–WAY; IF NOT TO THE OUTSIDE OF THE RIGHT–OF–WAY, AND A LINE AND STAKE LOCATOR INSTALLED AS SHOWN.
7. THE RESIDENTIAL BUILDING CONTRACTOR SHALL BE RESPONSIBLE FOR INSTALLING THE CLEAN–OUT AT THE EASEMENT LINE, OR RIGHT–OF–WAY LINE IF NO EASEMENT EXISTS, WHEN EXTENDING THE SERVICE TO THE STRUCTURE, AND SETTING CLEAN–OUT AT FINAL GRADE, INSTALLING 2' X 2' PAD WITH CAST IRON CLEAN OUT BOX AND RUBBER GEM CAP ON STAND PIPE.

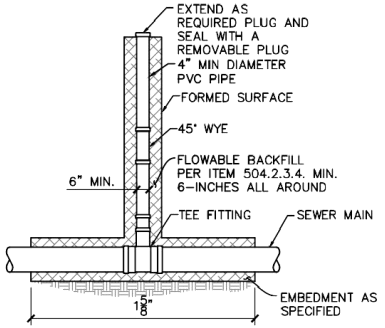

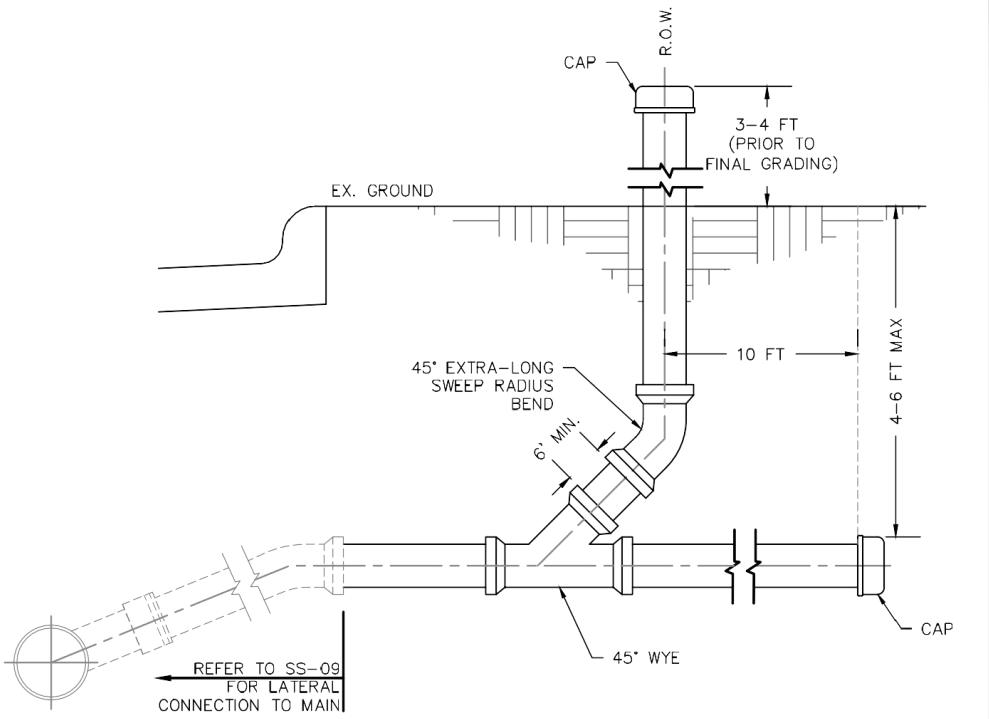

NOTES:

1. RESIDENTIAL SEWER LATERAL SHALL BE MINIMUM 4" PVC SDR 35 AT A 2% MINIMUM GRADE.
2. SEWER LATERALS SHALL EXTEND TO A POINT 10 FT BEYOND RIGHT–OF–WAY LINE AND SHALL BE A MAXIMUM OF 5 FT DEEP.
3. SEWER LATERALS SHALL BE PLACED AT THE CENTERLINE OF EACH LOT.
4. DURING INITIAL LATERAL INSTALLATION, A 4" CLEANOUT SHALL BE BROUGHT 3–4 FT ABOVE GRADE AT THE R.O.W. LINE.
5. PRIOR TO FINAL GRADING, LATERAL LOCATION SHALL BE MARKED ON CURB AND CLEANOUT TO BE CUT 1 FOOT BELOW GRADE.
6. CONNECTION TO THE MAIN SHALL BE MADE WITH A COMBO WYE & EXTRA–LONG SWEEP $\frac{1}{8}$ BEND.

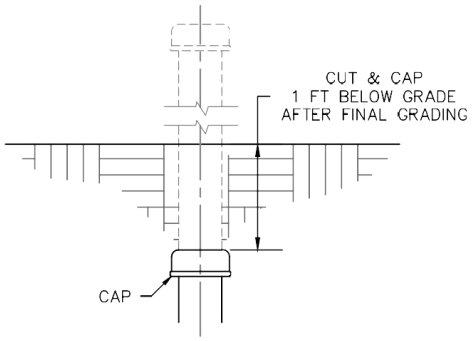

THE CITY OF Anna

~~RESIDENTIAL LATERAL~~

~~WITH CLEANOUT AT PROPERTY LINE~~

REV DATE: MARCH 2020

STANDARD DRAWING NO.

~~SS-12~~

THE CITY OF Anna

WASTEWATER LINE BY BORE

ENCASEMENT PIPE

STANDARD DRAWING NO. SS-13

REV. DATE: MARCH 2020

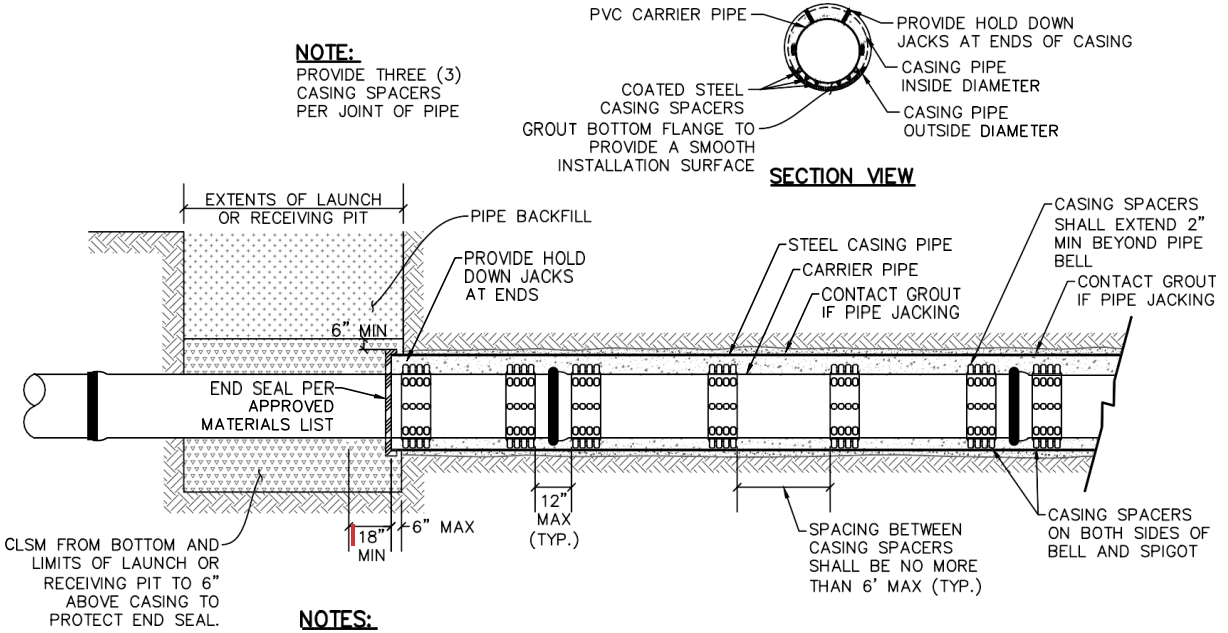

NOTE:
PROVIDE THREE (3) CASING SPACERS PER JOINT OF PIPE

NOTES:

1. PIPE SHALL HAVE UNIFORM ALIGNMENT AND BEARING WHEN INSTALLED AS A CARRIER PIPE IN CASING PIPE. TO PROVIDE STRAIGHT ALIGNMENT AND GRADE, CONCRETE PAVING MAY BE REQUIRED.
2. PRESSURE GROUT SPACE OUTSIDE OF CASING PIPE AFTER TUNNEL IS INSTALLED.
3. WHERE A BORE PIT EXCEEDS 5 FEET IN DEPTH, THE CONTRACTOR SHALL INSTALL SHORING OF THE PIT WALLS AS REQUIRED BY OSHA.
4. FOR BELL AND SPIGOT PIPE, REMOVE ALL SLACK IN LINE PRIOR TO BACKFILL AND PRESSURE TESTING.
5. CASING SPACERS SHALL FIT SNUG OVER THE CARRIER PIPE AND POSITION THE CARRIER PIPE APPROXIMATELY IN THE CENTER OF THE CASING PIPE TO PROVIDE ADEQUATE CLEARANCE BETWEEN THE CARRIER PIPE BELL AND THE CASING PIPE. CASING SPACERS SHALL BE COATED STEEL FOR SANITARY SEWER PIPE.
6. CASING PIPE SHALL BE 1.5 TIMES LARGER THAN THE CARRIER PIPE.

THE CITY OF Anna

WASTEWATER MANHOLE

STANDARD COVER

REV DATE:MARCH 2020

STANDARD DRAWING NO.

SS-14

1495A Cover

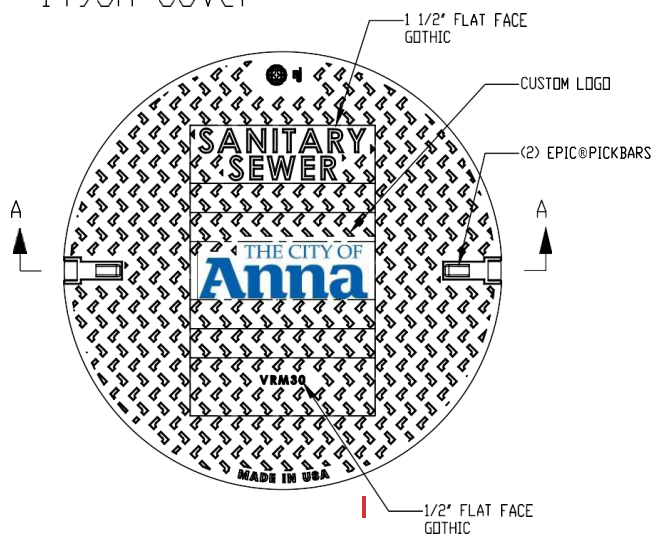

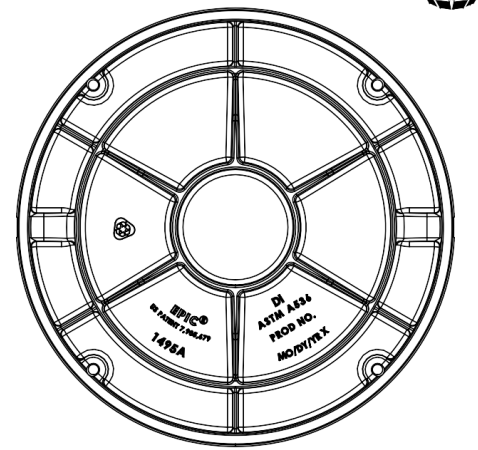

BOTTOM VIEW

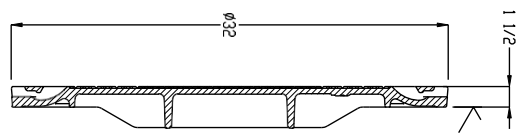

SECTION A-A

Drawing Revision
8/26/2019 Designer: MAH
9/5/2019 Revised By: MAH

Product Number
001495024

Design Features
-Materials
Ductile Iron (70-50-05)
-Design Load
Heavy Duty
-Open Area
n/a
-Coating
Undipped
-√ Designates Machined Surface

Certification
-ASTM A536
-Country of Origin: USA

Disclaimer
Weights (lbs/kg), dimensions (inches/mm) and drawings provided for your guidance. We reserve the right to modify specifications without prior notice.

CONFIDENTIAL: This drawing is the property of EJ Group, Inc. and embodies confidential information, registered marks, patents, trade secret information, and/or know how that is the property of EJ Group, Inc. Copyright ©2012 EJ Group, Inc. All rights reserved.

Contact
800 626 4653
ejco.com

1480ZPT 1495APT Assembly

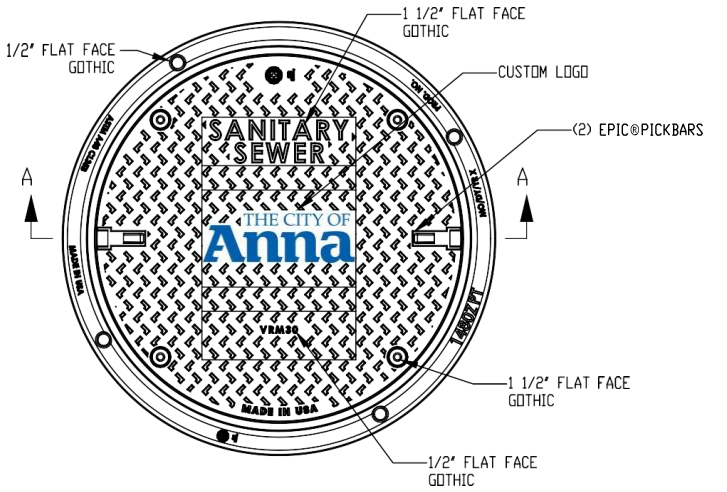

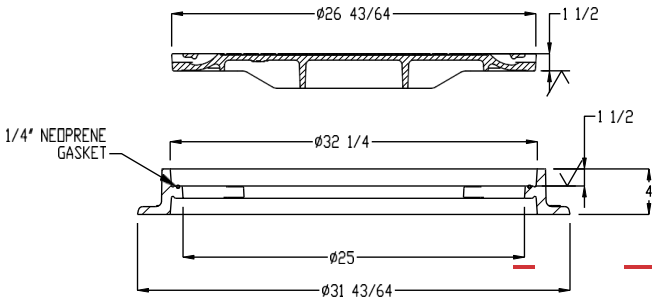

SECTION A-A

Product Number
001495023W01

Design Features
-Materials
Frame
Gray Iron (CL35B)
Cover
Ductile Iron (70-50-05)
-Design Load
Heavy Duty
-Open Area
n/a
-Coating
Undipped
-✓ Designates Machined Surface

Major Components
00148019
001495023

Certification
-ASTM A536
-Country of Origin: USA

Disclaimer
Weights (lbs/kg), dimensions (inches/mm) and drawings provided for your guidance. We reserve the right to modify specifications without prior notice.

CONFIDENTIAL: This drawing is the property of EJ Group, Inc. and embodies confidential information, registered marks, patents, trade secret information, and/or know how that is the property of EJ Group, Inc. Copyright ©2012 EJ Group, Inc. All rights reserved.

Contact
800 626 4653
ejco.com

Drawing Revision
8/26/2019 Designer: MAH
9/5/2019 Revised By: MAH

THE CITY OF Anna

~~WASTEWATER MANHOLE~~

~~BOLTED COVER~~

REV DATE: MARCH 2020

STANDARD DRAWING NO.

~~SS-14A~~

INSTALLATION

FALSE MANHOLE BOTTOM SHALL BE FURNISHED AND INSTALLED IN ALL MANHOLES CONSTRUCTED IN ADVANCE OF PAVING. THESE FALSE MANHOLE BOTTOMS WILL BE INSTALLED AT A TIME DIRECTED BY THE ENGINEER BUT WILL USUALLY BE AFTER ALL WORK IS COMPLETED ON THE WASTEWATER SYSTEM INCLUDING THE AIR TEST, BUT PRIOR TO THE FINAL INSPECTION.

REMOVAL

FALSE MANHOLE BOTTOM SHALL BE REMOVED AFTER THE FINAL APPURTENANCE ADJUSTMENT INSPECTION. THE PAVING CONTRACTOR AND OWNER'S REPRESENTATIVE WILL COORDINATE THE REMOVAL OF THE FALSE MANHOLE BOTTOMS.

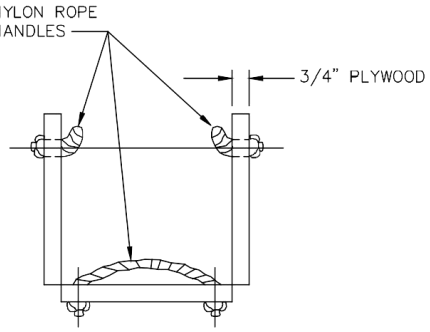

INSTALLATION AND REMOVAL POSITION

N.T.S.

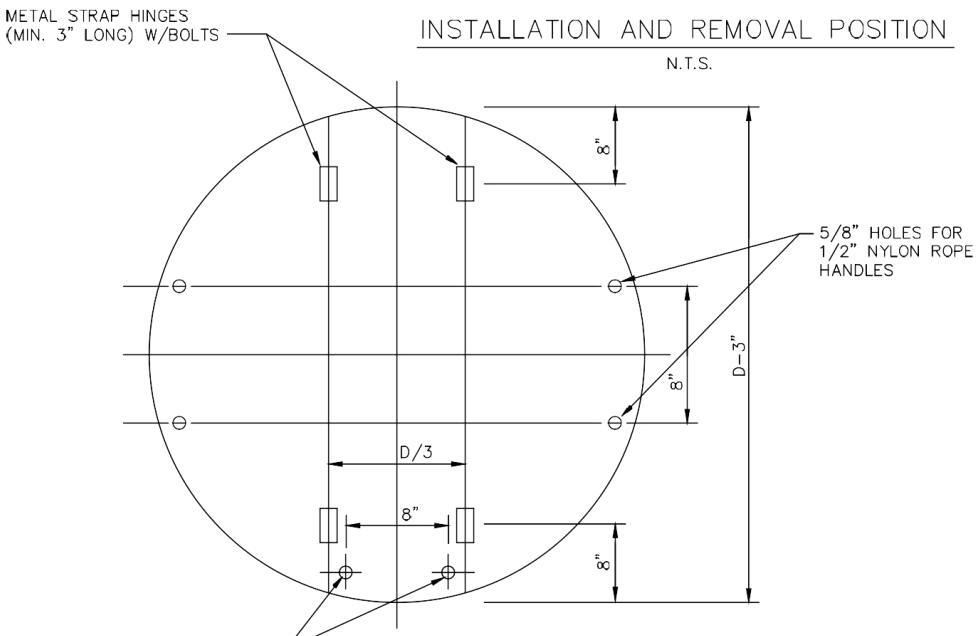

PLAN VIEW

N.T.S.

THE CITY OF Anna	~~WASTEWATER MANHOLE~~	REV DATE: MARCH 2020
	~~FALSE MANHOLE BOTTOM~~	STANDARD DRAWING NO. ~~SS-15~~

THE CITY OF Anna

I&I BARRIER & GATOR WRAP

6" GATOR WRAP

REV DATE: AUGUST 2020

STANDARD DRAWING NO.

SS-16

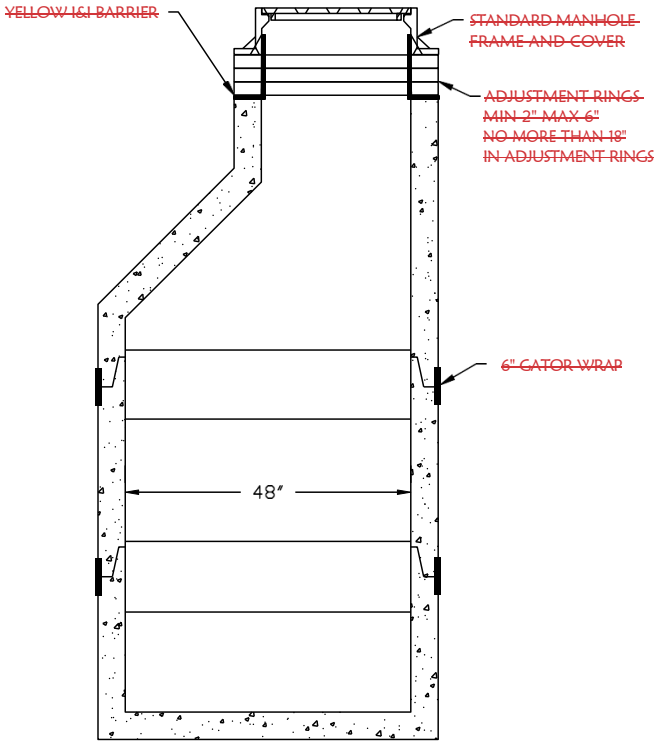

INFI-SHIELD
6" GATOR WRAP SPECIFICATION

Each manhole, catch basin or pipe joint shall be sealed with external rubber sleeve similar to the Infi Shield Gator Wrap as manufactured by Sealing Systems, Inc. (763-478-2057). The seal shall be made of a Stretchable, Self Shrinking, Intra-Curing Halogenated Based Rubber with a minimum thickness of 30 mils. The back side of each until shall be coated with a cross linked re-enforced butyl adhesive. The butyl adhesive shall be non-hardening sealant, with a minimum thickness of 30 mils. The seal shall be designed to stretch around the substrate then overlapped creating a cross link and fused bond between the rubber and butyl adhesive. The application shall form a continuous rubber seal that applies inward pressure on the protected area for the life of application. The butyl adhesive and the inward pressure exerted on the substrate will prevent the intrusion of water and soil through the joint sections of a manhole, catch basin or concrete pipe.

Gator Wrap 6"

Height	6 inches
Length	16 or 50 foot rolls
Thickness	60 mils
Height tolerance	6 inches +/- .188"
Length tolerance	+/- 3"
Rubber Thickness tolerance	30 mils
Butyl Adhesive Thickness	30 mils

I&I BARRIER

SPECIFICATION
Patent Pending

The bottom surface of the I/I BARRIER flange shall be sealed to the manhole cone top surface using a butyl sealant as specified by the manufacture of the I/I BARRIER. The sealant shall be applied to the top surface of the manhole cone section only. Sufficient sealant must be used to accommodate flaws in the cone surface and "out-of-flat" conditions. The amount of sealant and its placement will be determined by the condition of the cone. This determination will be the responsibility of the contractor installing the I/I BARRIER. The I/I BARRIER is then centrally seated on the cone against the sealant. The bottom adjustment ring is then centrally placed on the top surface of the I/I BARRIER flange using no sealant. If plastic adjustment rings with a vertical tongue are being used, the tongue must be cut off to allow the bottom ring to set flush on the I/I BARRIER flange. This removal should be done per instructions from the adjustment ring manufacturer. The chimney section is then completed based on the type of adjustment rings being utilized.

MMG, 120 E 15TH AVE, N. KANSAS CITY, MO 64116, PH 816-746-6669

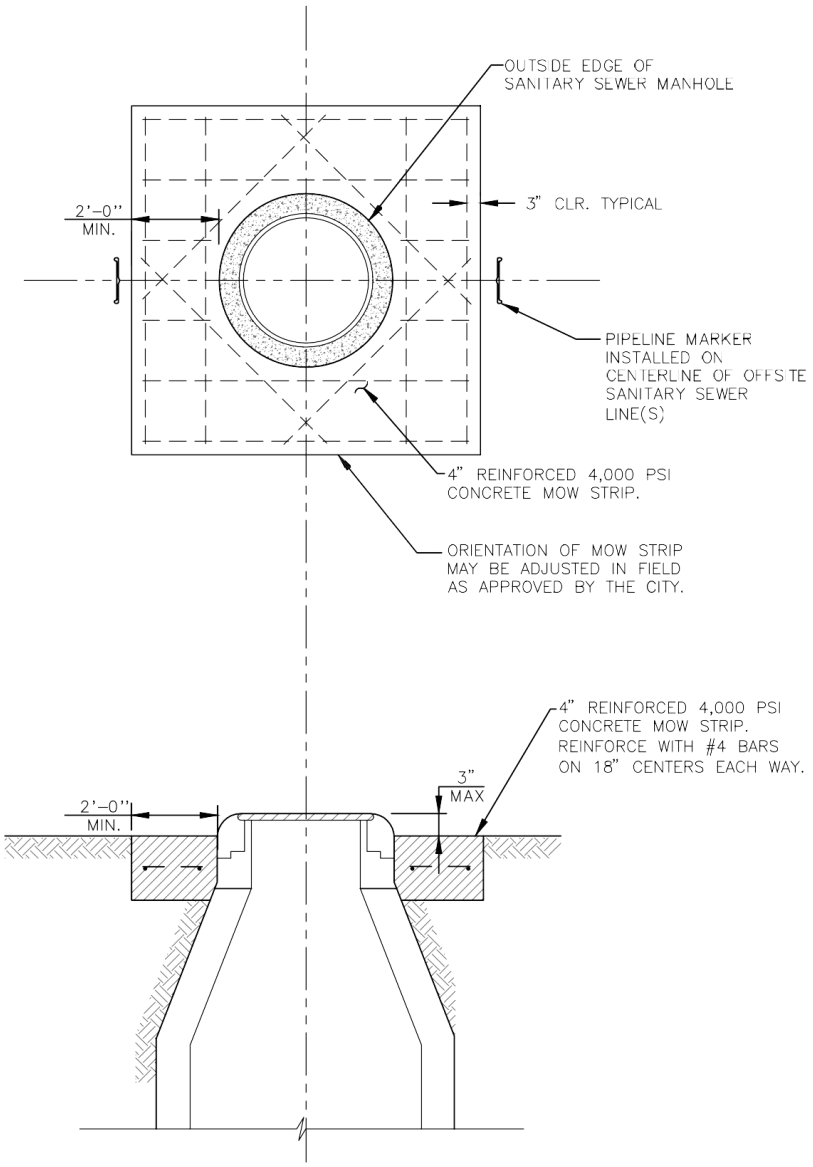

THE CITY OF Anna	~~MANHOLE & VALVE VAULT~~ ~~MOW STRIP~~	REV DATE: AUGUST 2020 STANDARD DRAWING NO. ~~SS-17~~

THE CITY OF Anna

~~EMBEDMENT~~

~~CLASS "B" & CLASS "G"~~

~~EMB-01~~

STANDARD DRAWING NO.

REV. DATE: AUGUST 2020

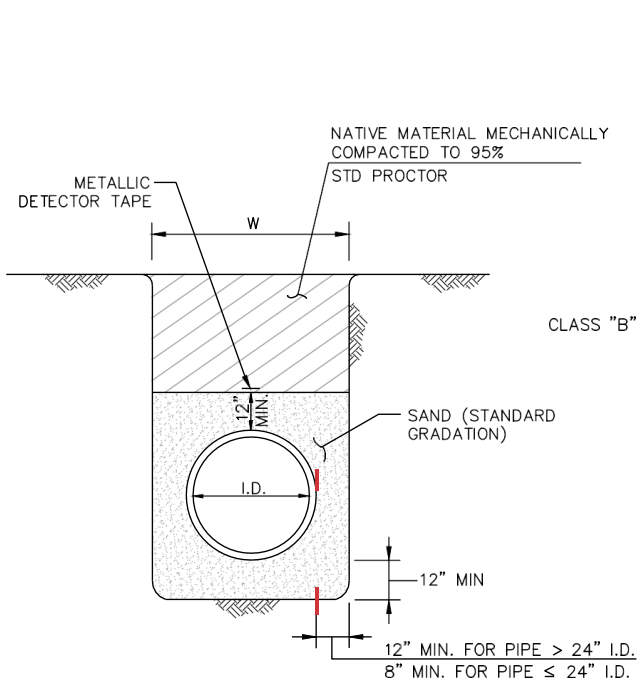

WATER LINE EMBEDMENT

NO SCALE

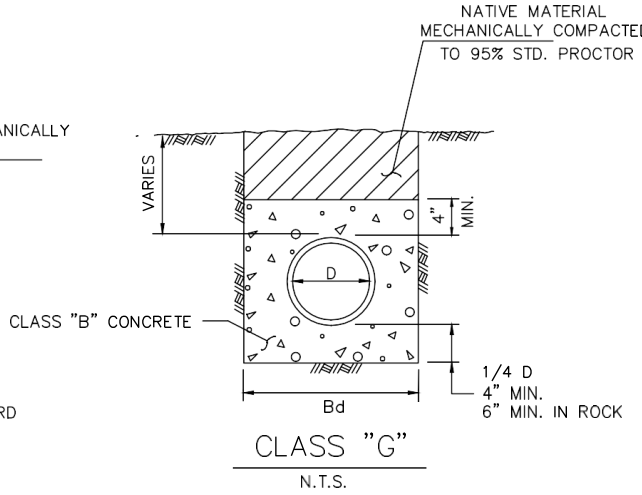

CLASS "G"

N.T.S.

NOTES:

1. D = INSIDE DIAMETER OF PIPE
2. Bd = TRENCH WIDTH

THE CITY OF Anna

~~EMBEDMENT~~

~~CLASS "H" & STORM SEWER~~

~~EMB-02~~

STANDARD DRAWING NO.

REV. DATE: AUGUST 2020

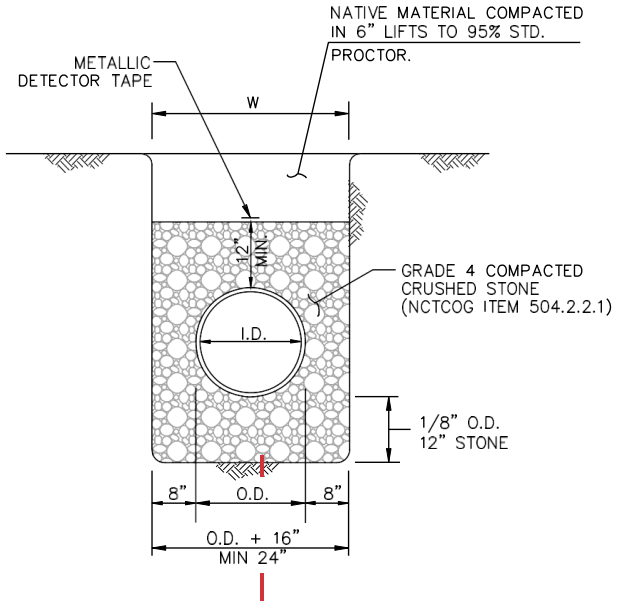

CLASS H EMBEDMENT

P.V.C. PIPE ONLY
STD. P.V.C. SEWER

NOTES:

1. UTILIZE CLASS "H" EMBEDMENT FOR PVC (SDR 35) WASTEWATER LINE.
2. BEDDING DEPTH MEASURED FROM OUTSIDE OF PIPE BELL.

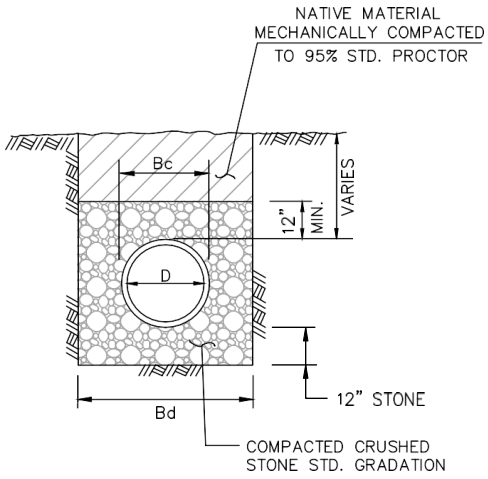

STORM SEWER EMBEDMENT

N.T.S.

NOTES:

1. D = INSIDE DIAMETER OF PIPE
2. Bd = TRENCH WIDTH
3. Bc = OUTSIDE DIAMETER OF PIPE

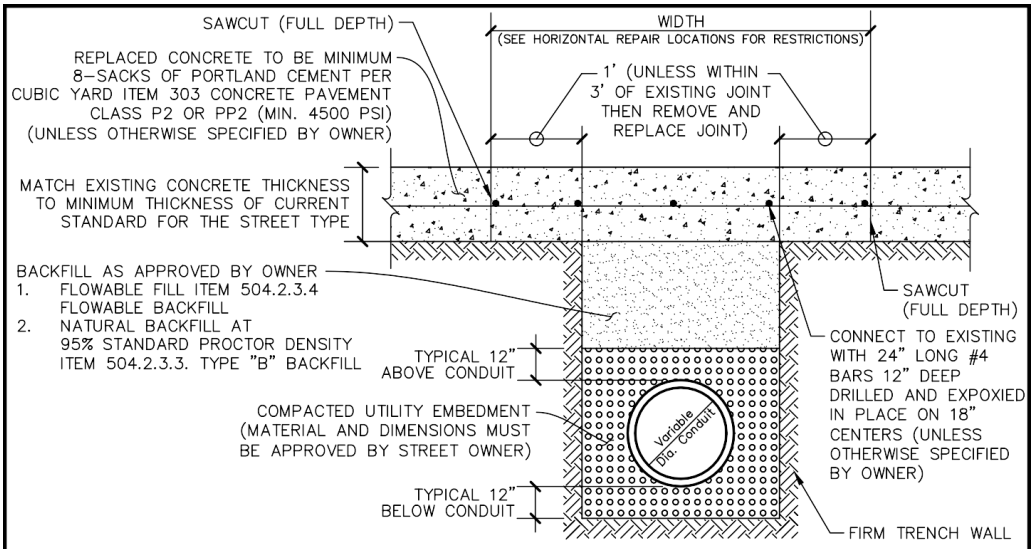

CONCRETE PAVEMENT

N.T.S.

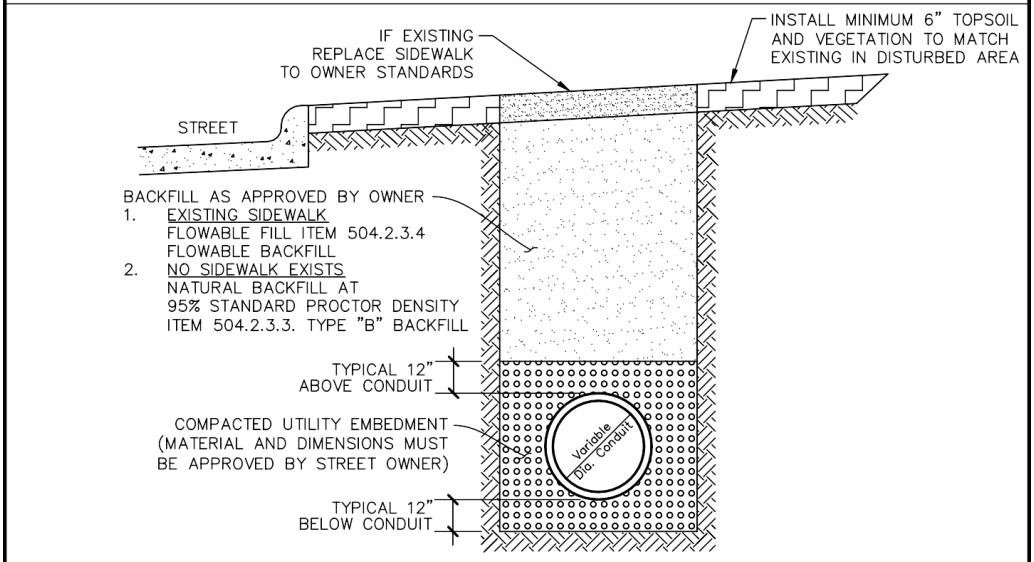

STREET PARKWAY

N.T.S.

THE CITY OF Anna	~~PAVEMENT CUT & REPAIR~~	REV DATE: AUGUST 2020
	~~CONCRETE & PARKWAY~~	STANDARD DRAWING NO. ~~EMB-03~~

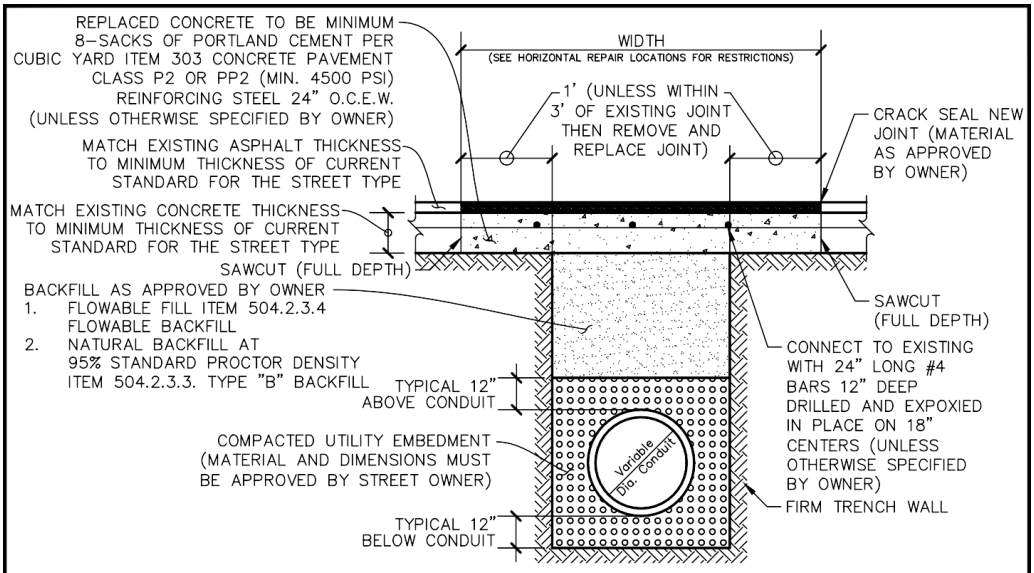

CONCRETE PAVEMENT WITH ASPHALT OVERLAY

N.T.S.

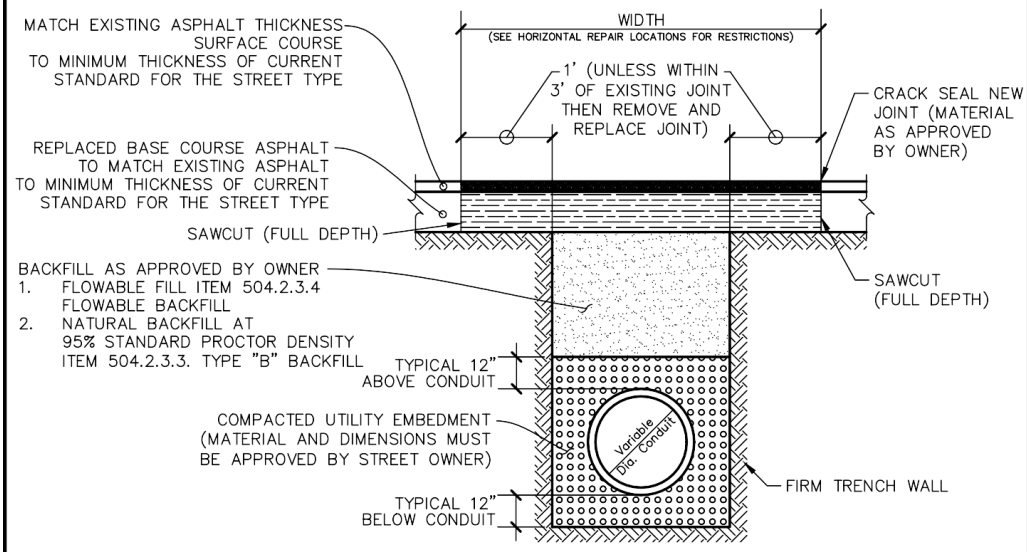

FULL DEPTH ASPHALT PAVEMENT

N.T.S.

THE CITY OF Anna	~~PAVEMENT CUT & REPAIR~~	REV DATE: AUGUST 2020
	~~ASPHALT~~	STANDARD DRAWING NO. ~~EMB-04~~

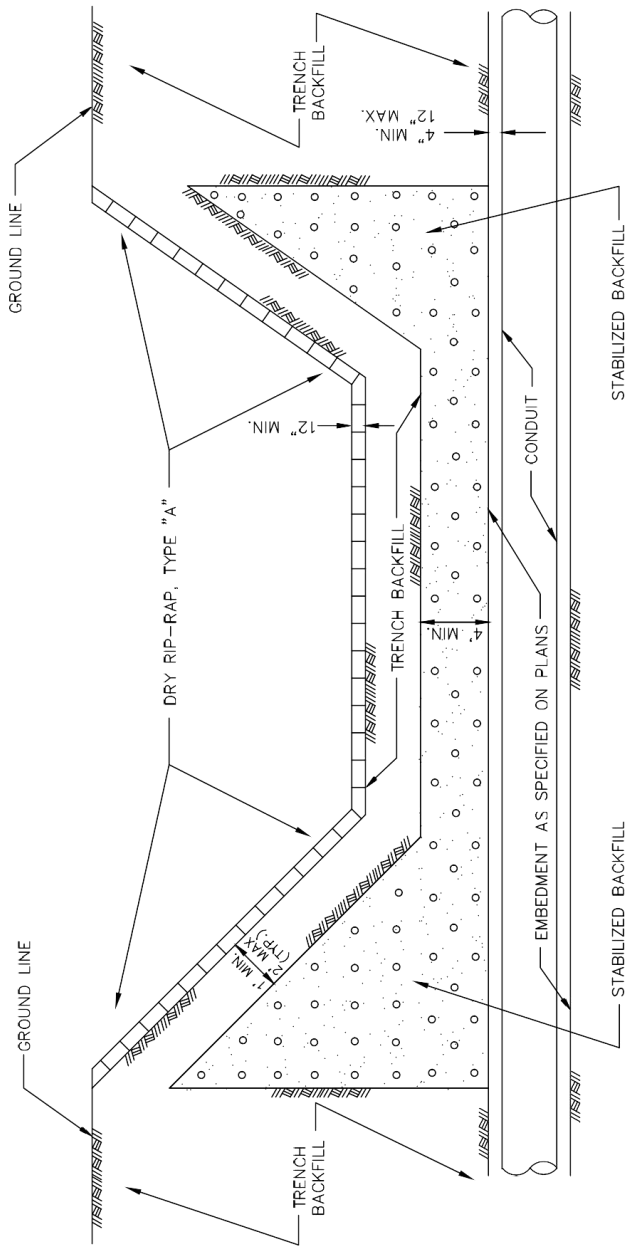

THE CITY OF Anna

~~INFILTRATION PROTECTION~~

~~CONDUIT UNDER CHANNEL~~

REV DATE: MARCH 2020

STANDARD DRAWING NO.

~~EMB-05~~

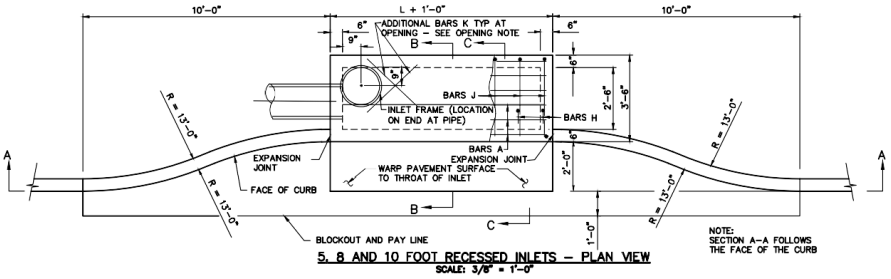

5, 8 AND 10 FOOT RECESSED INLETS – PLAN VIEW
SCALE: 3/8" = 1'-0"

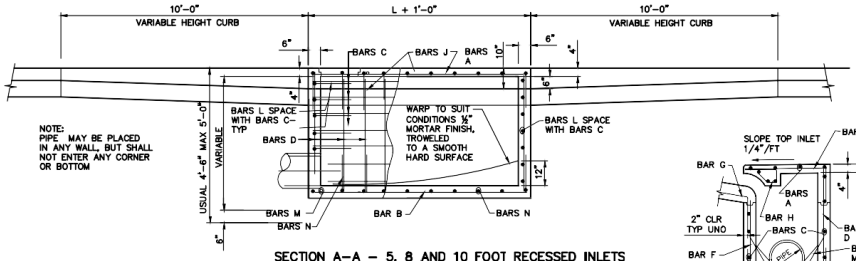

SECTION A-A – 5, 8 AND 10 FOOT RECESSED INLETS
SCALE: 3/8" = 1'-0"

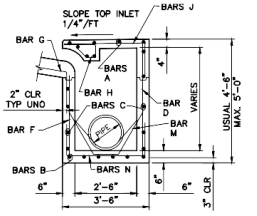

SECTION B-B –5, 8 AND 10 FOOT INLETS
SCALE: 3/8" = 1'-0"

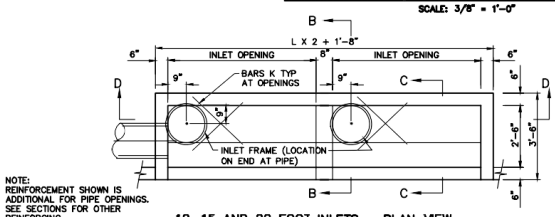

12, 15 AND 20 FOOT INLETS – PLAN VIEW
SCALE: 3/8" = 1'-0"

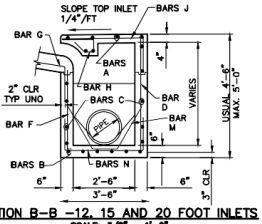

SECTION B-B –12, 15 AND 20 FOOT INLETS
SCALE: 3/8" = 1'-0"

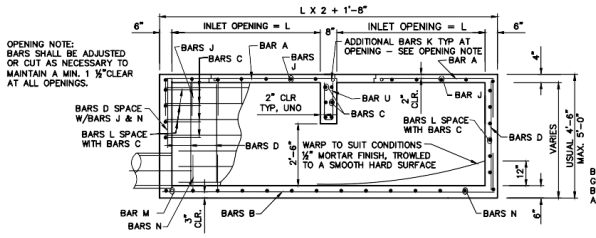

SECTION D-D – 12, 15 AND 20 INLETS
SCALE: 3/8" = 1'-0"

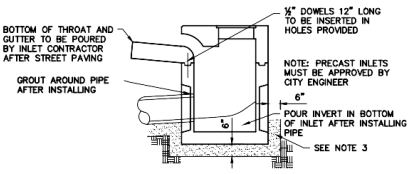

INSTALLATION DRAWING FOR PRECAST 5 AND 10 FOOT CURB INLETS
SCALE: 3/8" = 1'-0"

THE CITY OF Anna	~~STORMWATER CURB INLET~~	REV DATE: MARCH 2020
	~~STANDARD (1 OF 2)~~	STANDARD DRAWING NO. ~~STM-01~~

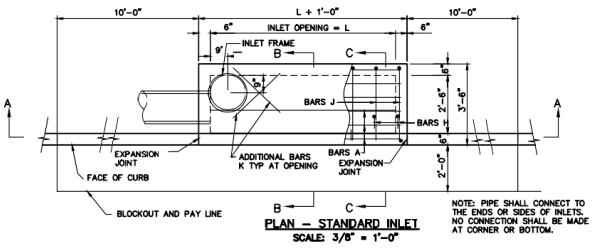

PLAN – STANDARD INLET
SCALE: 3/8" = 1'-0"

NOTE: PIPE SHALL CONNECT TO THE ENDS OR SIDES OF INLETS. NO CONNECTION SHALL BE MADE AT CORNER OR BOTTOM.

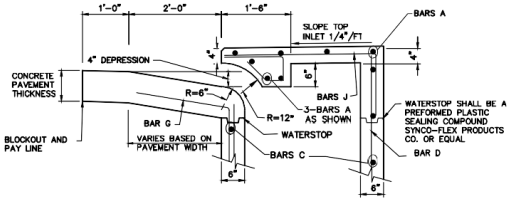

SECTION C–C –5, 8 AND 10 FOOT INLETS
SCALE: 3/4" = 1'-0"

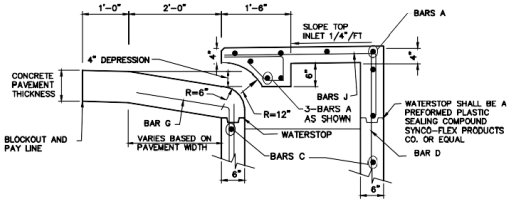

SECTION C–C –12, 15 AND 20 FOOT INLETS
SCALE: 3/4" = 1'-0"

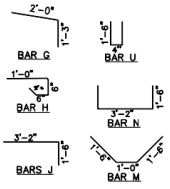

REINFORCING STEEL SCHEDULE DOUBLE INLETS					REINFORCING STEEL SCHEDULE				
INLET OPENING "L"	BAR	BAR SIZE	NO.* REQ'D	BAR* LENGTH	INLET OPENING "L"	BAR	BAR SIZE	NO.* REQ'D	BAR* LENGTH
6'-0"	A	#4	11	13'-4"	5'-0"	A	#4	9	5'-0"
	B	#4	6	13'-4"		B	#4	6	5'-0"
	C	#4	18	13'-4"		C	#4	12	5'-0"
	D	#5	1	5 4'-0"		D	#5	7	4'-0"
	F	#5	1	5 3'-3"		F	#5	7	3'-3"
	G	#4	15	3'-6"		G	#4	7	3'-6"
	H	#4	15	2'-6"		H	#4	9	2'-6"
	J	#5	15	4'-8"		J	#5	7	4'-8"
	K**	#4	4	3'-0"		K**	#4	4	3'-0"
	L	#5	24	3'-0"		L	#4	24	3'-0"
	M**	#4	2	4'-0"		M**	#4	2	4'-0"
	N	#5	15	6'-2"		N	#5	7	6'-2"
	U	#4	4	3'-4"					
7'-6"	A	#4	11	16'-4"	8'-0"	A	#4	9	7'-0"
	B	#4	6	16'-4"		B	#4	6	7'-0"
	C	#4	18	16'-4"		C	#4	12	7'-0"
	D	#5	18	4'-0"		D	#5	10	4'-0"
	F	#5	18	3'-3"		F	#5	10	3'-3"
	G	#4	18	3'-6"		G	#4	10	3'-6"
	H	#4	18	2'-6"		H	#4	14	2'-6"
	J	#5	18	4'-8"		J	#5	10	4'-8"
	K**	#4	4	3'-0"		K**	#4	4	3'-0"
	L	#4	24	3'-0"		L	#4	24	3'-0"
	M**	#4	2	4'-0"		M**	#4	2	4'-0"
	N	#5	18	6'-2"		N	#5	10	6'-2"
	U	#4	4	3'-4"					
10'-0"	A	#4	11	21'-4"	10'-0"	A	#4	9	9'-0"
	B	#4	6	21'-4"		B	#4	6	9'-0"
	C	#4	18	21'-4"		C	#4	12	9'-0"
	D	#5	23	4'-0"		D	#5	12	4'-0"
	F	#5	23	3'-3"		F	#5	12	3'-3"
	G	#4	23	3'-6"		G	#4	12	3'-6"
	H	#4	23	2'-6"		H	#4	17	2'-6"
	J	#5	23	4'-8"		J	#5	12	4'-8"
	K**	#4	4	3'-0"		K**	#4	4	3'-0"
	L	#4	24	3'-0"		L	#4	24	3'-0"
	M**	#4	2	4'-0"		M**	#4	2	4'-0"
	N	#5	23	6'-2"		N	#5	12	6'-2"
	U	#4	4	3'-4"					

* BAR QUANTITIES AND LENGTHS SHOWN ARE FOR MAX HEIGHT INLETS. VALUES SHALL BE ADJUSTED FOR USUAL HEIGHT INLETS
** NUMBER AND DIMENSIONS SHOWN FOR TOP SLAB OPENINGS AS SHOWN IN THE DETAILS. ADDITIONAL BARS SHALL BE PROVIDED AT ALL PIPE OPENINGS AS SHOWN IN THE DETAILS. NUMBER AND DIMENSIONS TO BE MODIFIED AS NEEDED.

NOTES FOR PRECAST INLET

1. PRECAST INLETS MUST BE APPROVED BY ENGINEER.
2. THE FLOOR OF THE EXCAVATION MUST PROVIDE A FIRM, LEVEL BED FOR THE BASE SECTION TO REST UPON.
3. A MINIMUM OF 6 INCHES OF 1" DIAMETER (MAXIMUM ROCK OR GRAVEL SHALL BE USED TO PREPARE THE BEDDING TO FINAL GRADE OR IN LIEU OF THIS, AT LEAST 6 INCHES OF 2–SACK CEMENT STABILIZED SAND SHALL BE USED TO PREPARE THE BEDDING TO GRADE. CEMENT STABILIZED–SAND SHALL BE ALLOWED TO SET BY KEEPING HOLE PUMPED DRY.
4. AFTER CASTING HAS BEEN INSTALLED ON THE PROPER BEDDING, THE BACKFILL MATERIAL, WHICH IS FREE FLOWING AND CLEAR OF ROCKS, IN EXCESS OF 4" DIAMETER AND OTHER LUMPS WHICH WOULD PROHIBITED PROPER COMPACTION, SHALL BE COMMENCED IN LIFTS OF NO MORE THAN 18". THE MATERIAL USED FOR BACKFILL SHOULD BE OF TYPE A SUITABLE TO OBTAIN THE DENSITY REQUIREMENTS FOR THE SPECIFIC JOB.
5. CONCRETE TO BE 4000 PSI.
6. LOCKING DEVICE IS REQUIRED ON ALL STORM SEWER LIDS.
7. "NO DUMPING" WARNING PLAQUE TO BE INSTALLED ON ALL STANDARD AND RECESSED INLETS.

THE CITY OF Anna

~~STORMWATER CURB INLET~~

~~STANDARD (2 OF 2)~~

REV DATE: AUGUST 2020

STANDARD DRAWING NO.

~~STM-01A~~

DIMENSIONS SHOWN ARE FOR MAXIMUM SIZE INLETS

INLET LENGTH	BAR TYPE	BAR DIA. (⅛ IN.)	NO. REQ'D	BAR DIMENSIONS		
				A	B	C
4	A	3	6	3'-2"	0'-3"	-
	B	3	1	2'-10"	-	-
	C	4	15	4'-8"	0'-6"	-
	D	4	5	4'-8"	-	-
	F	4	1	3'-2"	-	-
	G	3	5	2'-0"	1'-3"	-
	H	3	3	*	*	*
	N	3	3	3'-2"	3'-2"	3'-2"
6	A	3	9	3'-2"	0'-3"	-
	B	3	1	4'-10"	-	-
	C	4	15	6'-8"	0'-6"	-
	D	4	5	4'-8"	-	-
	F	4	1	3'-2"	-	-
	G	3	5	2'-0"	1'-3"	-
	H	3	3	*	*	*
	N	3	3	3'-2"	3'-2"	3'-2"
8	A	3	12	3'-2"	0'-3"	-
	B	3	1	6'-10"	-	-
	C	4	15	8'-8"	0'-6"	-
	D	4	5	4'-8"	-	-
	F	4	1	3'-2"	-	-
	G	3	5	2'-0"	1'-3"	-
	H	3	4	*	*	*
	N	3	3	3'-2"	3'-2"	3'-2"
10	A	3	10	3'-2"	0'-3"	-
	B	3	2	8'-10"	-	-
	C	4	16	10'-8"	0'-6"	-
	D	4	4	4'-8"	-	-
	E	5	6	10'-8"	-	-
	G	3	5	2'-0"	1'-3"	-
	H	3	15	*	*	*
	I	4	8	4'-8"	3'-2"	3'-2"
	L	4	5	4'-3"	-	-
12	A	3	12	3'-2"	0'-3"	-
	B	3	2	10'-10"	-	-
	C	4	16	12'-8"	0'-6"	-
	D	4	4	4'-8"	-	-
	E	5	6	12'-8"	-	-
	G	3	5	2'-0"	1'-3"	-
	H	3	18	*	*	*
	I	4	10	4'-8"	3'-2"	3'-2"
	J	5	9	3'-2"	1'-3"	-
	K	4	5	2'-3"	-	-
	L	4	5	4'-3"	-	-
	M	5	9	4'-3"	3'-2"	3'-9"
14	A	3	14	3'-2"	0'-3"	-
	B	3	2	10'-10"	-	-
	C	4	16	14'-8"	0'-6"	-
	D	4	4	4'-8"	-	-
	E	5	6	14'-8"	-	-
	G	3	5	2'-0"	1'-3"	-
	H	3	21	*	*	*
	I	4	12	4'-8"	3'-2"	3'-2"
	J	5	9	3'-2"	1'-3"	-
	K	4	5	2'-3"	-	-
	L	4	5	4'-3"	-	-
	M	5	9	4'-3"	3'-2"	3'-9"

*SEE DIAGRAM FOR DIMENSIONS. 4', 6', 8', 12' AND 14' INLETS.

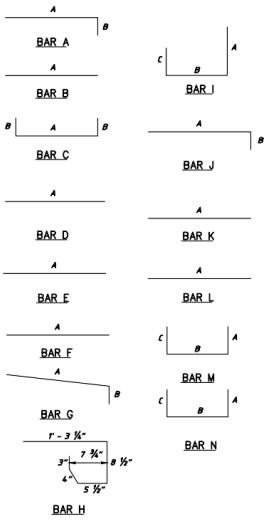

BAR DIAGRAMS

REINFORCING STEEL SCHEDULE

THE CITY OF Anna

~~STORMWATER CURB INLET~~

~~REINFORCING STEEL~~

REV DATE: MARCH 2020

STANDARD DRAWING NO.

~~STM-02~~

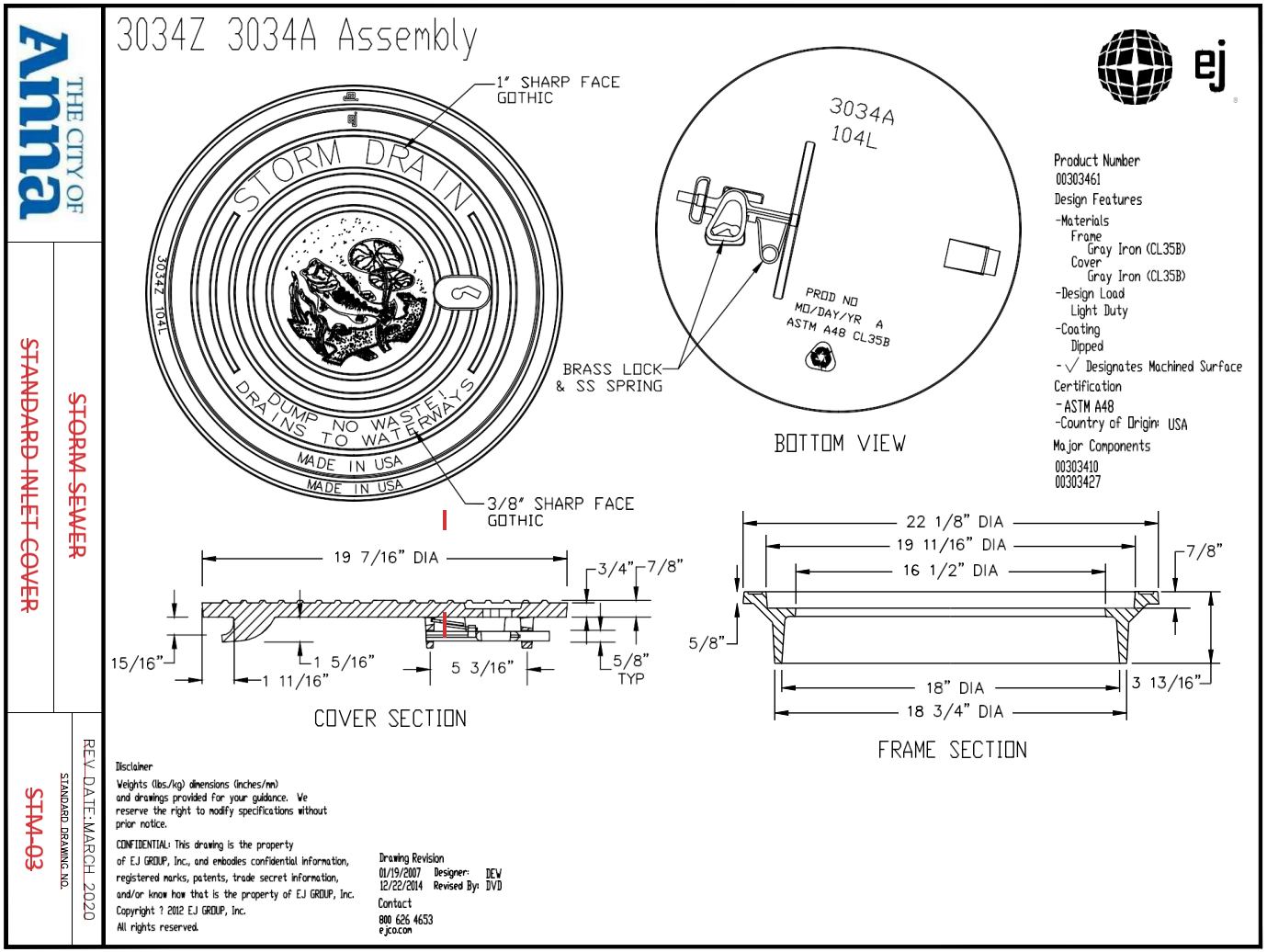
THE CITY OF Anna
STANDARD INLET COVER
STORM SEWER
STM-03
STANDARD DRAWING NO.
REV. DATE: MARCH 2020
3034Z 3034A Assembly
1" SHARP FACE GOTHIC
STORM DRAIN
3034Z 104L
DUMP NO WASTE
DRAINS TO WATERWAYS
MADE IN USA
MADE IN USA
3/8" SHARP FACE GOTHIC
BRASS LOCK & SS SPRING
3034A 104L
PROD NO
MO/DAY/YR A
ASTM A48 CL35B
BOTTOM VIEW
ej
Product Number
00303461
Design Features
-Materials
Frame
Gray Iron (CL35B)
Cover
Gray Iron (CL35B)
-Design Load
Light Duty
-Coating
Dipped
-√ Designates Machined Surface
Certification
-ASTM A48
-Country of Origin: USA
Major Components
00303410
00303427
19 7/16" DIA
3/4"
7/8"
15/16"
1 5/16"
1 11/16"
5 3/16"
5/8" TYP
COVER SECTION
22 1/8" DIA
19 11/16" DIA
16 1/2" DIA
7/8"
5/8"
18" DIA
18 3/4" DIA
3 13/16"
FRAME SECTION
Disclaimer
Weights (lbs./kg) dimensions (inches/mm) and drawings provided for your guidance. We reserve the right to modify specifications without prior notice.
CONFIDENTIAL: This drawing is the property of EJ GROUP, Inc., and embodies confidential information, registered marks, patents, trade secret information, and/or know how that is the property of EJ GROUP, Inc.
Copyright ? 2012 EJ GROUP, Inc.
All rights reserved.
Drawing Revision
01/19/2007 Designer: DEV
12/22/2014 Revised By: DVD
Contact
800 626 4653
ejco.com

1480A 1480Z Assembly

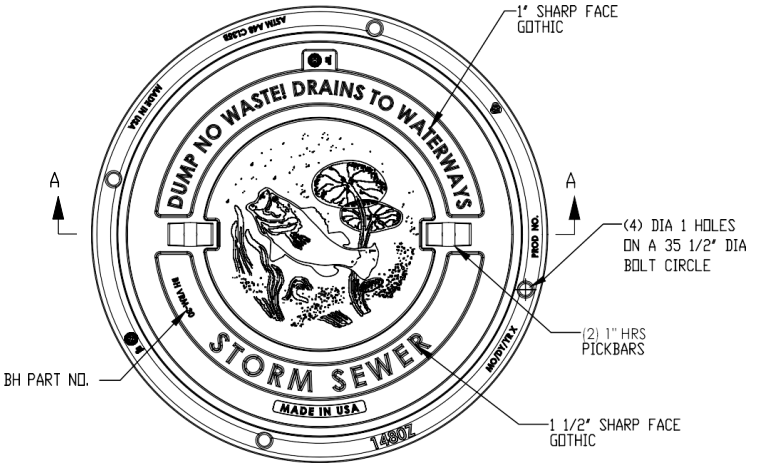

PLAN VIEW

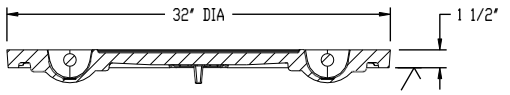

COVER SECTION

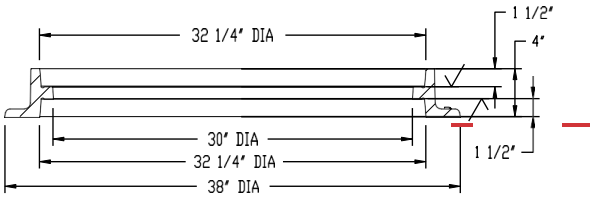

SECTION A-A

Product Number
00147987A01

Design Features
-Materials
Cover
Gray Iron (CL35B)
Frame
Gray Iron (CL35B)
-Design Load
Heavy Duty
-Open Area
n/a
-Coating
Undipped
-√ Designates Machined Surface

Certification
-ASTM A48
-Country of Origin:USA

Major Components
00147987
00148015

Disclaimer
Weights (lbs./kg) dimensions (inches/mm) and drawings provided for your guidance. We reserve the right to modify specifications without prior notice.

CONFIDENTIAL: This drawing is the property of EJ GROUP, Inc., and embodies confidential information, registered marks, patents, trade secret information, and/or know how that is the property of EJ GROUP, Inc. Copyright ? 2012 EJ GROUP, Inc. All rights reserved.

Contact
800 626 4653
ejco.com

Drawing Revision
02/18/2010 Designer: DEV
11/22/2016 Revised By: DVD

THE CITY OF Anna

~~STORM SEWER~~

~~BOLTED INLET COVER~~

REV DATE:MARCH 2020

STANDARD DRAWING NO.

~~STM-03A~~

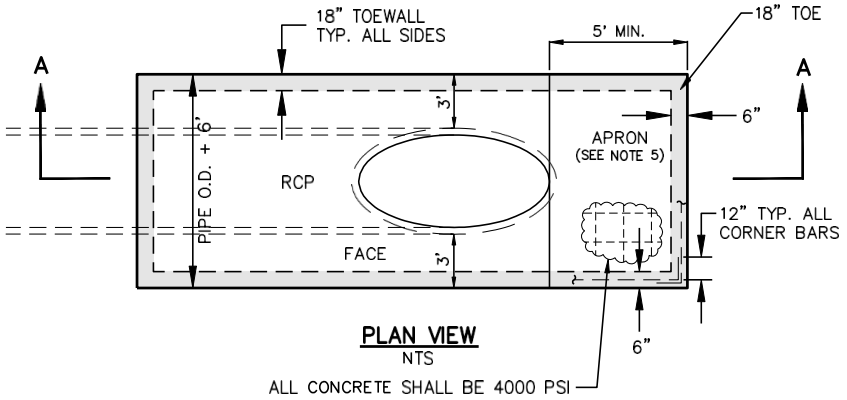

PLAN VIEW
NTS

ALL CONCRETE SHALL BE 4000 PSI

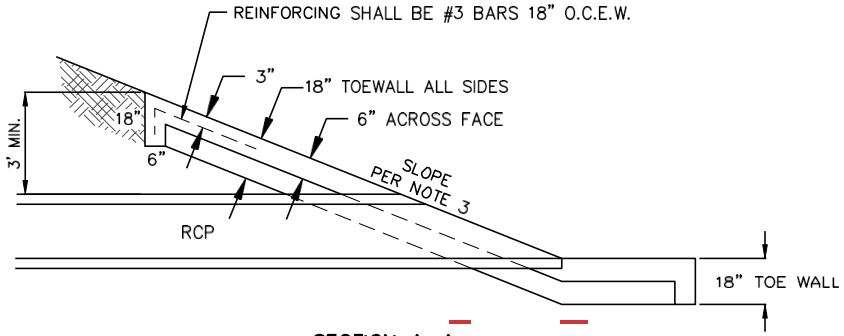

SECTION A–A
NTS

NOTES:

1. ROCK RIPRAP PROVIDED BEYOND APRON SHALL BE AS SPECIFIED IN PLANS BY DESIGN ENGINEER.
2. POSITIVE DRAINAGE MUST BE PROVIDED BEYOND CONCRETE APRON.
3. HEADWALL SLOPE SHALL BE SPECIFIED IN PLANS BY DESIGN ENGINEER (MAX. 3:1)
4. CONCRETE SHALL BE 4000 PSI.
5. CONCRETE APRON OR APPROVED EQUAL.

THE CITY OF Anna	~~STORMWATER HEADWALL~~	REV DATE:MARCH 2020
	~~TYPE "C"~~	STANDARD DRAWING NO. ~~STM-04~~

NOTE:

PROVIDE AN ALUMINUM LADDER FOR JUNCTION STRUCTURES DEEPER THAN 7'

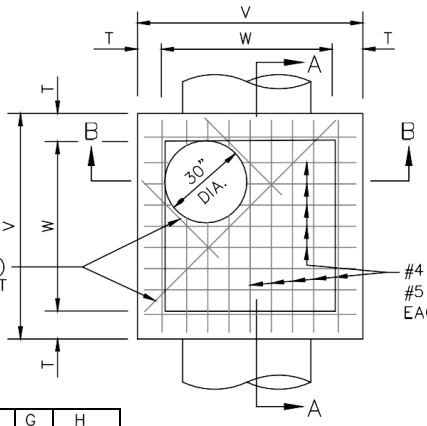

PLAN

N.T.S.

M.H. SIZE(W)	V	I	E	F	G	H
4'	5'–4"	8"	6"	9"	6"	1'–3"
5'	6'–4"	8"	6"	12"	8"	1'–8"
6'	7'–6"	9"	9"	16"	10"	2'–2"

TABLE OF DIMENSIONS

N.T.S.

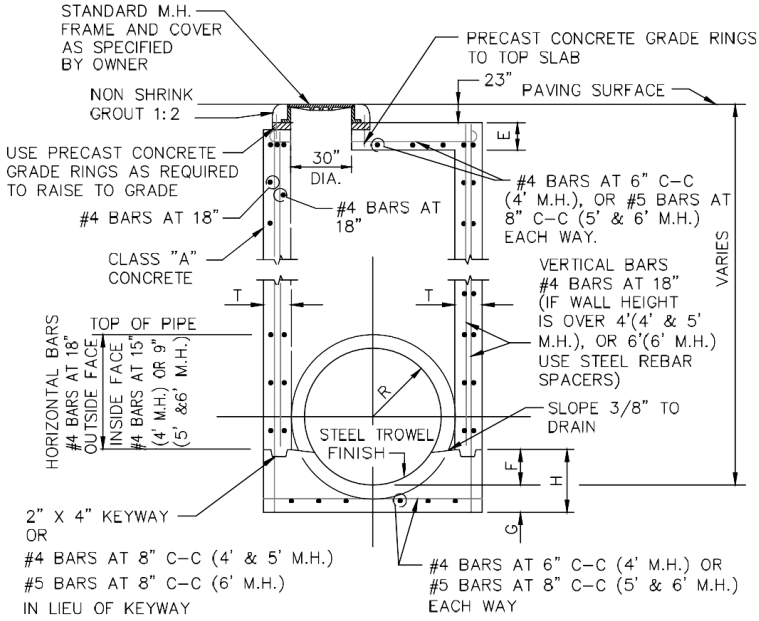

SECTION B–B

N.T.S.

THE CITY OF Anna	~~JUNCTION BOX~~	REV DATE: AUGUST 2020
	~~4', 5', OR 6' SQUARE (1 OF 2)~~	STANDARD DRAWING NO. ~~STM-05~~

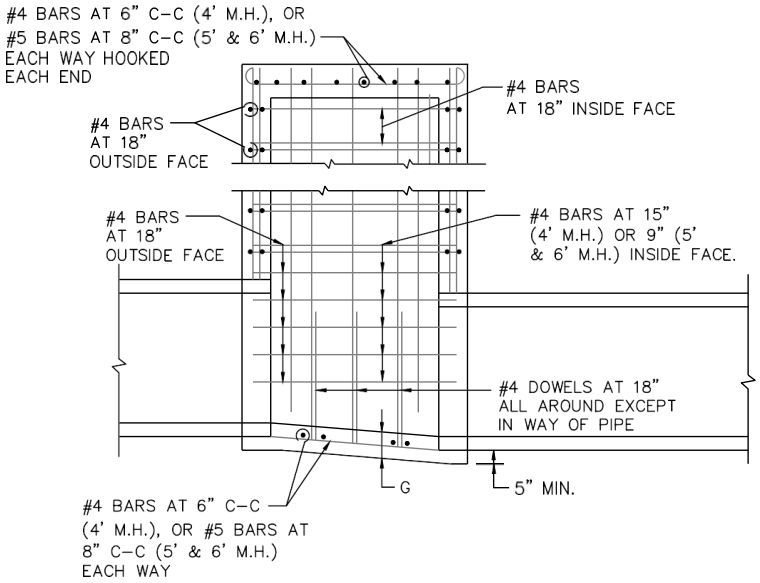

SECTION A-A
N.T.S.

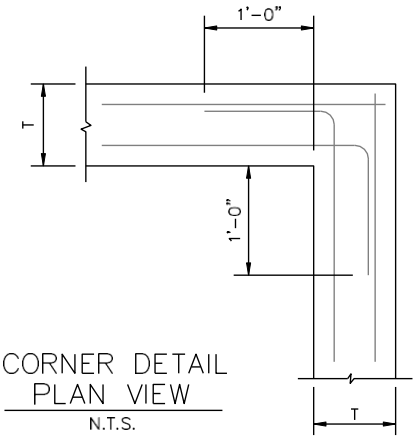

CORNER DETAIL
PLAN VIEW
N.T.S.

NOTES:

1. SLOPE INVERT OF MANHOLE AS INDICATED ON PLAN-PROFILE SHEET.
2. LAYERS OF REINFORCING STEEL NEAREST THE INTERIOR AND EXTERIOR SURFACE SHALL HAVE A COVER OF 2" TO THE CENTER OF BARS, UNLESS OTHERWISE NOTED.
3. CONCRETE SHALL BE CLASS "A".

THE CITY OF Anna	~~JUNCTION BOX~~	REV DATE: MARCH 2020
	~~4', 5', OR 6' SQUARE (2 OF 2)~~	STANDARD DRAWING NO. ~~STM-05A~~

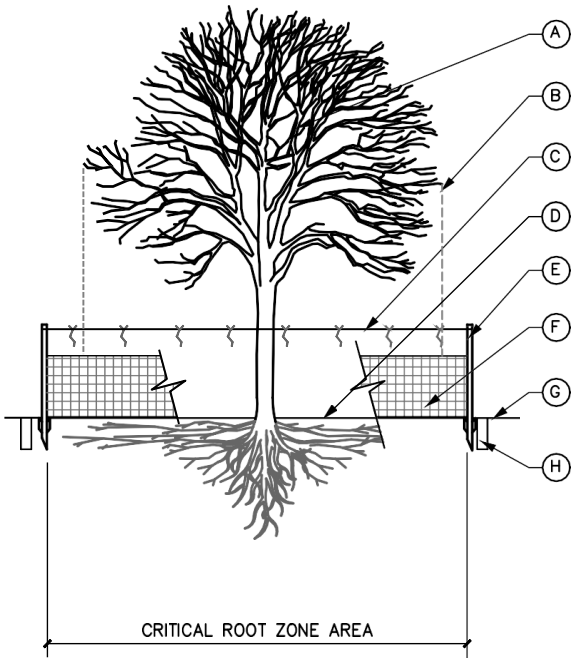

LEGEND:

(A) EXISTING TREE(S) TO REMAIN

(B) DRIP LINE OF EXISTING TREE (TYP.)

(C) CONTINUOUS NYLON TIE STRING TIED TO STAKE TOPS W/ 2' TUNDRA WEIGHT ORANGE STREAMERS AT 3' O.C.

(D) EXISTING GRADE TO REMAIN

(E) 2"x2"x8' STEEL POST T-STAKES, 8' O.C. MIN., DRIVEN 2' INTO GROUND AT (OR OUTSIDE) TREE DRIP LINE

(F) 4' MIN HEIGHT ORANGE PLASTIC FENCING INSTALLED PER CITY-APPROVED MANUFACTURER'S SPECIFICATIONS

(G) EXISTING GRADE TO BE DISTURBED

(H) ROOT PRUNING TRENCH 12" OUTSIDE FENCE

NOTES:

1. PERFORM ROOT PRUNING ON ALL EXISTING TREES TO REMAIN WHERE CONSTRUCTION ACTIVITY FALLS WITHIN DRIP LINE OF EXISTING TREES.
2. NO GRADING, PARKING, STORAGE OR ANY OTHER CONSTRUCTION ACTIVITY WITHIN FENCED AREA.
3. REFER TO TECHNICAL SPECIFICATION 329600.
4. TREE PRUNING BY CERTIFIED TREE TRIMMER OR ARBORIST.

THE CITY OF Anna	~~TREE PROTECTION~~	REV DATE: MARCH 2020
	~~PLAN DETAIL~~	STANDARD DRAWING NO. ~~L-01~~

~~Section 9. GENERAL CONSTRUCTION NOTES~~

~~(See following page)~~

GENERAL ITEMS

1. Prior to any construction the Contractor shall be familiar with the Contract Documents and Specifications, the Plans (including all notes). The City of Anna Specifications and any other applicable standards or specifications relevant to the proper completion of the work specified. Failure on the part of the Contractor to be familiar with all Standards and Specifications pertaining to this work shall in no way relieve the Contractor of responsibility for performing the work in accordance with all suchapplicable Standards and Specifications.
2. Construction may not start earlier than 7:00 am nor continue after 7:00 pm on Monday Saturday without prior permission from the city of Anna. Construction work on Sunday is prohibited without special permission. A fee of $150 must be paid to the city by Thursday noon prior to Saturday work, if city inspection is required.
3. Prior to construction, Contractor shall have in their possession all necessary permits, plans, licenses, etc. Contractor shall have at least one set of approved Engineering Plans and Specifications on site at all times.
4. All work shall conform to the City of Anna Standard Design and Specification Manual. In the event an item is not covered in the plans or the City of Anna Standard Design and Specification Manual, the most current North Central Texas Council of Governments (NCTCOG) Standard Specifications for Public Works Construction shall apply with concurring notification to the City and Project Engineer. The City shall have the final decision on all construction materials, methods, and procedures.
5. Construction inspection will be performed by representatives of the Owner, Engineer, City, Geotechnical Engineer, and reviewing authorities and agencies. Unrestricted access shall be provided to them at all times. Contractor is responsible for understanding and scheduling required inspections. Testing samples shall be collected and processed by certified technicians.
6. All contractors must confine their activities to the work area. No encroachments onto developed or undeveloped areas will be allowed. Any damage resulting therefrom shall be Contractor's responsibility to repair.
7. Developer shall be responsible for obtaining all offsite easements prior to commencement of offsite and relevant on-site construction activities.
8. It will be the responsibility of each contractor to protect all existing public and private utilities throughout the construction of this project. Contractor shall contact the appropriate utility companies for line locations prior to commencement of construction and shall assume kill liability to those companies for any damages caused to their facilities.
9. Trench Safety Design will be the responsibility of the Utility Contractor. Contractor shall submit a trench safety design approved by a professional engineer to the City for their records prior to the start of any underground utility construction.
10. Work may not be backfilled or covered until it has been inspected by the City.
11. Continuous access for mail service shall be provided during construction.
12. If any conflict arises between these generals notes and any other notes found in the plans, the City General Notes shall take precedence.

EROSION CONTROL & VEGETATION

1. Every soil disturbing activity shall have an accompanying Erosion Control Plan (ECP), Storm Water Pollution Prevention Plan (SWPPP) and either Construction Site Notice (CSN) for those activities disturbing more than 1 but less than 5 acres or Notice of Intent (NOI) for those activities disturbing 5 or more acres including those activities less than 5 acres, but are part of a common plan of development totaling 5 or more acres. A copy of the appropriate SWPPP and CSN or NOI shall be provided to the City of Anna prior to issuance of a grading permit.
2. The CSN or NOI shall be posted in a location viewable to the public until construction is complete and Notice of Termination (NOT) submitted. The Storm Water Pollution Prevention Plan (SWP3) shall be readily available for review by Federal, State, or local officials.
3. No soil disturbing activities will occur prior to the SWP3, ECP, and associated Best Management Practices (BMP) being fully implemented, and then inspected by Anna's Public Works Department.
4. The contractor shall comply with the current NCTCOG iSWMTM Technical Manual for Construction, the TPDES General Construction Permit TXR150000 and any other State and/or Local regulations.
5. The contractor shall employ measures as necessary to prevent dirt, mud, debris from being tracked off site. Any dirt, mud, debris tracked offsite shall be cleaned up by the contractor immediately.
6. The site shall be reviewed by the operator or his representative weekly, and after any major storm. Adjustments/repairs to the erosion control measures will be made as needed. The contractor shall notify Anna's Public Works Department of adjustments/repairs such that the adjustments/repairs may be inspected and approved by the City.
7. Along parkways and medians in the right-of-way, a four (4) foot strip of native sod shall be placed behind the curb on top of four (4) inches of topsoil. Contractor shall be responsible for any temporary irrigation or watering as needed. Areas adjacent to new residential lots, where the homebuilder will be disturbing this area, may be exempt from this requirement so long as adequate erosion control measures are installed and maintained behind the curb.
8. Contractor shall establish perennial vegetation on all other disturbed areas immediately upon completion of grading activities. An appropriate seed mix should be considered with respect to the season and the timing of final acceptance. A cool season seed mix should be used between September 15th and April 15th. Final acceptance of a site shall be contingent upon perennial vegetation being fully established in all disturbed areas.
9. A completed N.O.T. shall be submitted to the State and a copy of this N.O.T. shall be provided to the City of Anna prior to final acceptance.

GENERAL CONSTRUCTION NOTES
August 2020

111 N. Powell Parkway P (972)924-3325
Anna, Texas 75409 F (972)924-2620

THE CITY OF Anna

TREE PRESERVATION

1. Prior to construction, the contractor or subcontractor shall construct and maintain a protective fence at the drip line of all protected existing trees, bushes, landscaping plants, sprinklers, and lawns unless noted otherwise on the construction drawings. Any damage to the existing trees, bushes, landscaping plants, sprinklers, and lawns caused by construction shall be replaced to the satisfaction of the City of Anna at the contractor's expense.
2. All protective measures shall be in place prior to commencement of any site or grading work and remain in place until all exterior work has been completed.
3. The City's Public Works Department shall be contacted to approve the placement of the Tree Preservation fencing, prior to beginning of site work on property.
4. The following activities shall be prohibited within the limits of the primary root zone: Material storage, equipment cleaning/liquid disposal, no tree attachments of signs or wires, and construction equipment/vehicular traffic is prohibited.
5. Unless specifically allowed, no grade changes shall be allowed within the limits of the primary root zone of any protected tree unless the City approves adequate construction methods.
6. No trimming of trees may occur within the Tree Preservation fencing limits without prior consent of the City.

TRAFFIC CONTROL

1. When the normal function of the roadway is suspended through closure of any portion of the right of way, temporary construction work zone traffic control devices shall be installed to effectively guide the motoring public through the area. Consideration for road user safety, worker safety, and the efficiency of road user flow shall be an integral element of every traffic control zone. All traffic control devices shall be in accordance with the latest T.M.U.T.C.D. Devices must contain either Type III Hi Intensity sheeting or Type IV reboundable Hi Intensity sheeting.
2. Any traffic control plans not included in the engineering plan set must be submitted for review a minimum of seven (7) working days prior to the anticipated lane closure. Construction activity shall not begin until the traffic control plan is approved by the City of Anna. Traffic control plans may be required on other roadways as determined by the City or the designee. All traffic control plans must be prepared by an individual that is certified in their preparation. Any deviation from an approved traffic control plan must be reviewed by the City or their designated representative.
3. The contractor shall be responsible for maintaining all traffic control devices on an around the clock basis, whether or not work is active. Any deficiencies shall be corrected by the contractor immediately, regardless of time of day.
4. Lane closures will not be permitted on arterial roadways before 9:00 am or after 4:00 pm. Violations may result in suspension of all work at the job site for a minimum of 48 hours. The City reserves the right to deny a closure for a special event.
5. Lane closures will not be permitted on streets adjacent to private and/or public schools without written permission from the City.
6. All temporary traffic control devices shall be removed as soon as practical when they are no longer needed. When work is suspended for short periods of time at the end of the workday, temporary traffic control devices that are no longer appropriate shall be removed or covered. The first violation of this provision will result in a verbal warning to the construction foreman. Subsequent violations will result in suspension of all work at the job site for a minimum of 48 hours.
7. Existing permanent signs removed by the contractor for construction purposes other than stop, yield and street name signs shall be returned to the City of Anna. All stop, yield and street name signs removed shall be temporarily erected in the appropriate locations (no less than 7 feet vertical from grade) until permanent signing can be installed. Any temporary stop or yield sign locations to be left in place overnight will require prior approval from the City.
8. Any permanent sign or existing pavement markings that conflict with the approved traffic control plan shall be covered, obliterated or removed as directed by theCity.
9. Access must be maintained to all drives and side streets or as indicated in the traffic control plan.

PEDESTRIAN ACCESSIBILITY (WITHIN PUBLIC R.O.W.)

1. All newly constructed sidewalks, curb ramps and crosswalks installed within City of Anna public rights-of-way shall be considered a pedestrian access route and shall conform to the most current "Draft" Guidelines for Public Rights-of-Way created by the United States Access Board. http://www.access-board.gov/prowac/draft.htm
2. Curb Ramps shall conform to all federal guidelines.
3. Detectable warning surface shall be pre-manufactured plates with truncated dome material built in. Only plates from TxDOT approved vendors shall be permitted and shall be installed per manufacturer's specifications. Brick pavers will not be allowed. Final color shall be approved by the City, but shall generally be in the "RED" color family.
4. The contractor shall provide a clear and safe route for pedestrians adjacent to the site for the duration of construction. A temporary pedestrian route shall be provided when any existing sidewalk is closed due to construction activity.
5. Construction materials shall be kept off existing sidewalks and consolidated in areas within the City right-of-way, unless otherwise approved by the City.
6. Sidewalks shall conform to all federal guidelines, but shall generally adhere to the following:
   a. Generally follow the street grade with a maximum 2.0% cross slope.
   b. Shall be free of any overhangs by landscaping or other items to a height of 7.0 feet.
   c. Sidewalks shall maintain a continuous (pedestrian access route) elevation through residential and commercial driveways.

WATER

1. Line and grade stakes for construction of all water and sanitary sewer lines and services shall be furnished by the following:
   a. Private Development: Developer's engineer, surveyor or their designated representative.
   b. Capital Improvement Projects: the Contractor, unless specified otherwise in the contract.
   Property lines and corners must be properly staked to verify the water line alignment. The City shall not be liable for improper alignment or delay of any kind caused by improper or inadequate surveys.
2. All new water services shall be 1" minimum DR-9 (250 psi) HDPE poly pipe with PE4710 as specified in ASTM F714, from the service tap to the curb stop, 3/4 inch minimum compression fitting angle stop, and meter box, unless otherwise indicated on the plans. Curb stops will be located within the meter box and facing toward the lot. For single family residential services the minimum meter size is ¾".
3. Each meter box shall be located adjacent to the curb and installed after street pavement has been completed and curbs backfilled. Meter boxes shall be Carson Valve and Meter Boxes. A 2" minimum metal locator plate shall be placed in the recess ofthe meters.
4. All water services shall be located along the lot lines. Single services shall be placed no more than 2-ft inside the service lot at the lot line.
5. Detector pads embedded in sand shall be installed above all service connections.
6. Each individual service location shall be sawcut into the face of the curb with a (4) inch high "I" painted by the Contractor. If no curb exists, a similar mark shall be placed in the pavement near the edge of the roadway. After cleaning the sawcut via compressed air or brush, apply one coat of APWA Blue spray paint to mark the sawcut symbol.
7. All water service lines shall be embedded with 12-inch sand below and around the pipe and 6-inches of sand over the top of the pipe; from the water main to the meter. Water service lines within City roadway right-of-way shall be compacted to a minimum of the 95% Standard Proctor density with a +/- 3% wet of optimum moisture content.
8. All 6", 8" and 12" water mains shall be AWWA C900 PVC pipe.
9. Minimum cover shall be 4 feet for 6 inch to 8 inch lines, 5 feet for 12 inch to 16 inch lines, and 6 feet for 20 inch and larger lines. Additional cover may be required in un-paved or un- developed areas.
10. Water mains in the right of way near storm inlets shall be constructed with a minimum clearance of 12 inches behind the inlet by pulling the pipe using longitudinal bending in accordance to 80% of the pipe manufacturers' requirements.
11. All blow off (flush) valves shall be two (2) inch and shall be provided in accordance with City of Anna standards and/or NCTCOG standards.
12. Bolts and nuts for mechanical joints will be of a high strength low alloy corrosion resistant steel conforming to ASTM A325 (Type 3).
13. All waterline fittings shall be ductile iron. All 6" – 12" valves shall be AWWA approved resilient wedge gate valves.
14. In addition to thrust blocking, all fittings must be restrained and shall beMega lug.
15. Install 2' x 2' x 6" thick, concrete pad around all water valves outside of concrete pavement.
16. Valve extensions shall be provided on all valves with operating nuts greater than 5 ft below finished ground or paving grade.
17. All valves shall be marked with a "V" by sawcut on the curb or pavement The "V" shall point to the location of the valve as follows: If the valve is in the paving, the "V" shall be marked upright; if the valve is outside the paving, the "V" shall be marked upside down. After cleaning the sawcut via compressed air or brush, apply one coat of APWA Blue spray paint to mark the sawcut symbol.
18. NRS Resilient Seated Gate Valves shall conform to AWWA C509 or AWWA C515. Rubber Seated Butterfly Valves shall conform to AWWA C504. All valves shall have a 2" square operating nut and open to the left. All valves shall be Mueller, Clow or AVK.
19. Install water line marking at all offsite valves, vaults, air release valves, and blow-off valves.

STORM SEWER

1. When there is less than two feet of clearance between a water/sewer line and a storm sewer, the Contractor shall install concrete encasement around the sanitary sewer or waterlines at the storm sewer crossing. The encasement shall be a minimum of 10 L.F. and 6" thick centered at the crossing.
2. Manhole lids on storm sewer inlets shall be centered over the outgoing storm lateral.
3. All bends and wyes for pipes less than 42" diameter must be factory manufactured bends and wyes.
4. Inlet block-outs shall be placed three (3') feet from the back of standard curbs for the distance of ten (10') feet upstream (both sides in sag conditions) and five (5') feet downstream from the inside face of inlet. Inlet block-outs shall be placed five (5') feet downstream from the inside face of inlet, unless otherwisenoted.
5. Structural concrete used for storm water structures shall be in compliance with the latest version of the NCTCOG standards and specifications.
6. Prior to final acceptance, all storm sewers shall be television filmed and cleared of any sediment and debris.

RETAINING WALLS

1. Retaining walls greater than 4 feet in height must be an engineered design by an engineer licensed in the State of Texas.
2. Retaining walls (including the footing) shall not be constructed to encroach upon City Right-of-Way, public easements, or public utilities without the consent of the City.

FIRE HYDRANTS

1. Fire hydrants shall be placed 3 feet from back of curb unless otherwise indicated on the plans, or as required to clear sidewalks. Fire hydrants shall not be located within a sidewalk.
2. Fire hydrants shall be three-way breakaway type no less than 5¼ inches in size and must conform to AWWA specifications C-502. They shall be Mueller, Clow or approved equal with all bronze to bronze moving parts. Two 2½ inch NST hose connections are required. The 4.5 inch diameter steamer connection shall be 4.800 pitch with 4 threads per inch. The operating nut shall be 1½ inch P.to F pentagon nut, open left. Mechanical joint connection is required. The steamer nozzle shall face the fire lane, adjacent roadway or as directed by the Fire Department.
3. A Blue Stimsonite, Fire-Lite reflector (or approved equal) shall be placed in the center of the street opposite each fire hydrant. The fire hydrant shall be painted with two coats of Tnemec Series 530 Omnithane paint or approved equal, and two coats of primer. Bonnet to flange and nozzle caps of Fire Hydrant to be painted with 2 coats of Tnemec Safety Paint Series 2H "Hi Build". Fire hydrant color shall be according to flow.

SANITARY SEWER

1. Line and grade stakes for construction of all water and sanitary sewer lines and services shall be furnished by the following:
   a. Private Development: Developer's engineer, surveyor or their designated representative.
   b. Capital Improvement Projects: The Contractor, unless specified otherwise in the contract.
   Property lines and corners must be properly staked to verify the sewer line alignment. The City shall not be liable for improper alignment or delay of any kind caused by improper or inadequate surveys.
2. Unless otherwise noted on the plans, all sanitary sewer pipes shall be PVC ASTM Designation D3034 up through 15" in diameter. Pipes larger than 15" in diameter shall be designated PVC ASTM F679. Other pipe shall be subject to Approval by the City.
3. All residential sanitary sewer services shall include a 4" tee wye bend, pipe and stopper, and shall be installed downstream from the water service at the lot centerline and extended 10' beyond the property line onto private property. Sewer services shall be laid on a minimum slope of +2.00% from the main line to the street right-of-way.
4. After curb and paving has been completed, contractor shall cut a four (4) inch high "H" on the curb indicating the location of the cleanout. After cleaning the sawcut via compressed air or brush, apply one coat of APWA Green paint to mark the sawcut symbol.
5. All sanitary sewers and services shall be tested by pulling a mandrel, air pressure test, and television video. The television video shall be provided to the City Inspector in a USB drive format and shall be labeled accordingly for City record. Television survey shall be completed with water being introduced into the sewer line.
6. All sanitary sewer manholes within flood plains or flood prone areas require Type "S" manhole lids and be properly vented per TCEQ requirements.
7. All manholes shall be vacuum tested where a 10" mercury vacuum is developed. The air vacuum shall then be monitored for a test period of 2 minutes. The allowance drop in air vacuum shall be no greater than 1" mercury over the test period.
8. The Contractor shall install City of Anna standard wastewater manhole lids on all manholes.
9. Unless otherwise noted, in open spaces, the top of the sanitary sewer manhole shall be installed a minimum of 3 inches above the surrounding ground.
10. Structural concrete used for wastewater structures shall be in compliance with the latest version of the NCTCOG standards and specifications.
11. Install sanitary sewer pipeline marker at all offsite manholes.

PAVING

1. All mix designs shall be sealed by a professional engineer and submitted to the City Inspector one week before a scheduled pour. Mix designs are subject to approval by the City.
2. All concrete paving shall have a minimum compressive strength of 4,000 psi, unless a higher compressive strength is specified.
3. All fill shall be compacted to 95% Standard Proctor Density in a maximum of 6" (six) inch lifts or per the approved Geotechnical Engineers Report. Subgrade shall extend 12" minimum behind the curb, be a minimum of 6" thick and shall be lime stabilized as recommended in the Geotechnical Report.
4. All streets, firelanes and alleys shall be placed on lime stabilized subgrade with lime content of not less than 6%. Lime stabilized subgrade shall be compacted to 95% of maximum standard proctor density (astmd698) within minus 2 to plus 4 of optimum moisture.
5. A subgrade density report must be presented to the City Inspector prior to paving. Densities are only valid for 72 hours. Densities received on a Friday are valid until noon on the following Monday. Densities taken before inclement weather may be required to be retaken at the City Inspector's discretion. A minimum of four (4) test cylinders are required for breaks at 7 days, 2 at 28 days, and the last cylinder being an extra.
6. All City streets are required to be paved with the use of an approved slip form paving machine with mechanical vibration. Hand pours are only allowed at intersection returns or other non-standard areas as approved by the City Inspector. Hand pours shall be vibrated by an approved hand vibrator.
7. Construction joints, cold joints and curb returns shall have fabric installed to allow for expansion.
8. Sawed joints shall be every 15 feet for 6" thick concrete and every 20 feet for 8" thick
9. concrete; and shall be constructed within the first 12 hours of concrete placement.
10. Expansion joints shall be placed at a maximum every 400 feet.
11. All median noses shall be poured monolithically.
12. All Barrier Free Ramps shall comply with the current TDLR, ADA, PROWAG, and TxDOT regulations.

~~Section 10. APPROVED MATERIALS LIST~~

~~(See following page)~~

WATER

Overview Category	Basic Product Category	Use Specifications	Manufacturer	Model, Type, or Approved Style
Service Connections				
	Angle Meter Valve	1"		
	Angle Meter Valve	1"	Mueller	
	Angle Meter Valve	1" to 2"		
	Angle Meter Valve	1" to 2"	Mueller	
	Corporation Stop	1" to 1 1/2"		
	Corporation Stop	1" to 1 1/2"	Mueller	
	Curb Stop	1" to 2"		
	Curb Stop	1" to 2"	Mueller	
	Service Saddle	1" to 1.5"		Bronze Double Strap
	Service Saddle	1" to 1.5"	Mueller	Bronze Double Strap
	Service Saddle	1" to 1.5"	A.Y. McDonald	Bronze Double Strap
	Service Line	1" to 2"	Various Manufacturers	Poly Tubing
	Casing for Service Lines	2" to 4" Schudel 40 or SDR 21	Various Manufacturers	PVC Piping for service lines
	Inserts	1" to 2"	Various Manufacturers	Insert stiffeners for poly tubing
	Water Meters	1" to 2"	Master Meter	Harmony AMI 4G
	Water Meters	Larger than 2"	Master Meter	Octave AMI 4G
	Meter Box and Lid	Up to 1"	DFW Plastics	37A
	Meter Box and Lid	1 1/2" to 2"	DFW Plastics	65A
	Meter Box and Lid	Larger than 2" meters will require vault		
Distribution System				
	Tapping Sleeve	2" and larger	Smith-Blair	Stainless Steel
	Tapping Sleeve	2" and larger	Mueller	Stainless Steel
	Tapping Sleeve	2" and larger	U.S. Pipe	Stainless Steel
	Valve, Resilient Wedge Gate	2" and larger	Clow	Resilient Wedge Gate Valve
	Valve, Resilient Wedge Gate	2" and larger	Mueller	Resilient Wedge Gate Valve
	Valve, Resilient Wedge Gate	2" and larger	American Flow Control	Resilient Wedge Gate Valve
	Valve, Resilient Wedge Gate	2" and larger	East Jordan EJ Valve	Resilient Wedge Gate Valve
	Valve, Resilient Wedge Gate	2" and larger	M&H Valve	Resilient Wedge Gate Valve
	Valve, Butterfly	16" and larger	Clow	Butterfly Valve
	Valve, Butterfly	16" and larger	Mueller	Butterfly Valve
	Valve, Butterfly	16" and larger	M&H Valve	Butterfly Valve
	Valve, Butterfly	16" and larger	American Flow Control	Butterfly Valve
	Valve, Butterfly	16" and larger	ValMatic	Butterfly Valve
	Valve, Butterfly	16" and larger	Pratt	Butterfly Valve
	Valve, Butterfly	16" and larger	DeZurik	Butterfly Valve
	Valve, Check	2" and larger	ValMatic	Check Valve
	Valve, Air/Vacuum	2" and larger	Vent-O-Mat	RBX Series
	Valve, Air/Vacuum	2" and larger	A.R.I.	D-060
	Valve, Flap	Blow-Off Valve	Waterman	
	Valve Box & Lid		East Jordan	Adjustable
	Valve Box & Lid		Tyler Union	Adjustable
	Valve Box & Lid		Bass & Hays	Adjustable
	Fire Hydrants		East Jordan	WaterMaster 5CD250
	Flush Hydrant		The Kupferle Foundry	Mainguard #77
	Fire Hydrant Reflector	Blue Reflector	Centerline Supply	3M Raised
	Fire Hydrant Reflector	Blue Reflector	Econosigns	3M Raised
	Fire Hydrant	Integral Quick Connect	Mueller	Integral Storz Connection
	Automatic Flush Valve		Kupferle	Eclipse 9400
	Automatic Flush Valve		Kupferle	Eclipse 9800
	Casing Spacers		Raci	
	Casing Spacers		Power Seal	
	Casing Spacers		Pipeline Seal and Insulator	
	End Seal	Casing Pipe, Bore	LinkSeal	
	Coupling, Adapter		Ford	
	Coupling, Adapter		Power Seal	
	Coupling, Adapter		Hymax	
	Coupling, Adapter		JCM	
	Coupling, Adapter		Romac	
	Coupling, Adapter		Smith-Blair	
	Ductile Iron Fittings	Domestic	Tyler Union	AWWA C110/C153
	Ductile Iron Fittings	Domestic	Star	AWWA C110/C153
	Mechanical Restraints		EBAA	Megalug
	Water Meter Vault		Park	Precast Concrete
	Fire line valve box		Park	Precast Concrete
	Pipeline Marker	Blue	Rhino	Triview 400 66"
Other				
	Bolts			Stainless Steel
	Paint		Tnemec	
	Paint		Sherwin Williams	
	Polywrap	All DI Pipe and Fittings		

WASTEWATER

Overview Category	Basic Product Category	Use Specifications	Manufacturer	Model, Type, or Approved Style
Collection System				
	Cleanout Castings & Lids		Bass & Hays	
	Cleanout Castings & Lids		East Jordan	
	Cleanout Castings & Lids		Tyler Union	
	Corrosion Protection	Concrete Admixture	ConShield Technologies	
	Polymer Concrete Manhole		Armorock	
	Chimney Seal		Strike Products	
	Chimney Seal		Cretex	
	Rain Pans		Cretex	
	Manholes	Precast Manhole	Forterra	
	Manholes	Precast Manhole	Old Castle	
	Manhole Frame and Cover	Standard	EJ	NPR19-002876011628
	Manhole Frame and Cover	Bolted	EJ	NPR19-002876-11629
	Manholes	Pipe Connectors	A-Lok	
	Manholes	Pipe Connectors	Kor-N-Seal	
	Manholes	Pipe Connectors	Fernco	
	Manholes	Pipe Connectors	PSX	
	Manholes	I&I Barrier	Strike Products	
	End Seal	Casing Pipe, Bore	LinkSeal	
	Combination Air Valves	Force Main ARV's	Vent-O-Mat	Series RGX, Stainless Steel
	Combination Air Valves	Force Main ARV's	ARI	Stainless Steel
	Valve, Plug	2" and larger	Pratt	Plug Valve Internal coating to be lined with Tnemec Series 431 Permashield PL applied at a thickness of 40 mils DFT
	Valve, Plug	2" and larger	Dezurik	Plug Valve Internal coating to be lined with Tnemec Series 431 Permashield PL applied at a thickness of 40 mils DFT
	Pipeline Marker	Green Sewer Main Marker	Rhino	TriView 400
	Service Taps		Fernco	
Lift Station				
	Pump	Submersible Pump	Flygt	At least one Cutter Pump in Lift Station
	Pump	Submersible Pump	KSB	At least one Cutter Pump in Lift Station
	Air-Powered Mixer	Grease Control	Medora / GridBee	GridBee AP500 Mixer
	Pressure Transducer		Wika	
	Pressure Transducer		KPSI	
	Wet Well Piping			Stainless Steel
	Guide Rails			Stainless Steel
	Electromagnetic Meter	Force Main Flow Meter	Badger	
	Electromagnetic Meter	Force Main Flow Meter	Endress Hauser	
	Level Transmitter		Echo	Echo Plus 6R30
Other				
	Bolts			Stainless Steel
	Paint		Tnemec	
	Paint		Sherwin Williams	
	Ductile Iron Pipe & Fittings		Lined with Protecto 401	
	Polywrap	All DI Pipe and Fittings		
	Odor Control	Odor Control Vent Check Valve	Wager	Model 1850
	Odor Control		Purafil	
	Sump Pump		Hydromatic	

STORM

Overview Category	Basic Product Category	Use Specifications	Manufacturer	Model, Type, or Approved Style
Curb inlet				
	Inlet filters		Forterra	Bio Clean
	Grate inlet filters		Forterra	Bio Clean
	Inlet access lid		East Jordan Ironworks	
	Inlet access lid		Bass & Hays Foundry	
Manholes				
	Manhole frame and cover	Standard	EJ	303461
	Manhole frame and cover	Bolted	EJ	00147987A01
Pipe				
	Concrete Pipe		Forterra	RCP
	Concrete Box		Forterra	RCB

Item No. 7.

Planning & Zoning Commission Agenda
Staff Report

Meeting Date: 9/9/2026
Staff Contact:

AGENDA ITEM:
Future Agenda Items.

SUMMARY:

BACKGROUND:

Date Submitted		**Jurisdiction**	
Owner			
Representative/Applicant			
Requested Action			
Purpose			
Land Area			
Location			
Comp Plan Designation			
Existing Zoning			
Public Notice			

Surrounding Properties			
	Land Use	**Zoning**	**Comp Plan Designation**
North			
East			
South			
West			

ATTACHMENTS: